Vol. I

TRANSCRIPT OF RECORD

Supreme Court of the United States

OCTOBER TERM, 1927

No. 285

HOLLAND FURNITURE COMPANY, PETITIONER,

vs.

PERKINS GLUE COMPANY

ON WRIT OF CERTIORARI TO THE UNITED STATES CIRCUIT COURT OF APPEALS FOR THE SIXTH CIRCUIT

PETITION FOR CERTIORARI FILED JUNE 3, 1927

CERTIORARI GRANTED OCTOBER 17, 1927

(32,737)

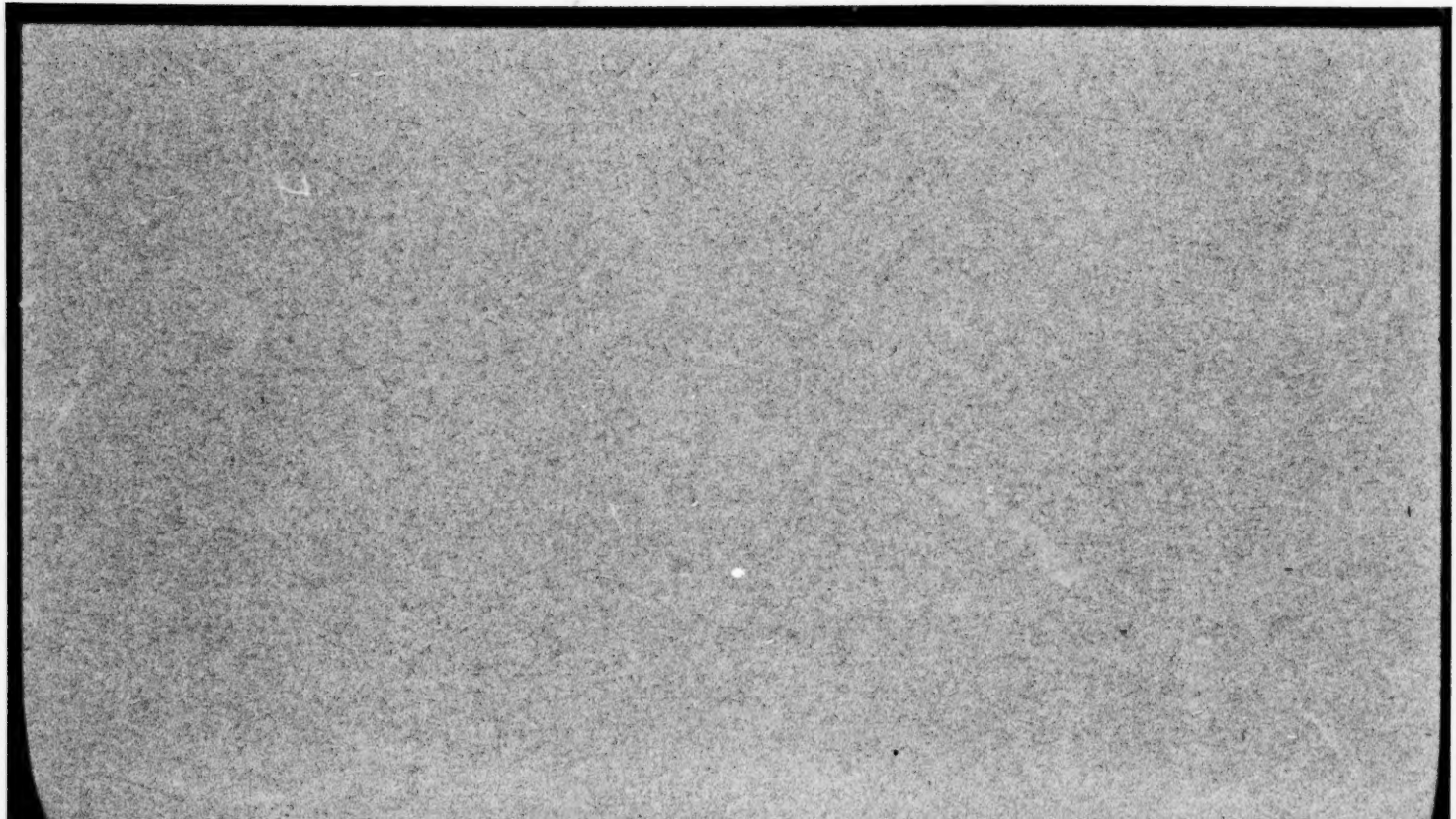

(32,737)

SUPREME COURT OF THE UNITED STATES

OCTOBER TERM, 1927

No. 285

HOLLAND FURNITURE COMPANY, PETITIONER,

vs.

PERKINS GLUE COMPANY

ON WRIT OF CERTIORARI TO THE UNITED STATES CIRCUIT COURT OF APPEALS FOR THE SIXTH CIRCUIT

INDEX

	Original	Print
Record from district court of the United States, western Michigan	1	1
Bill of complaint	1	1
Answer	8	8
Interrogatories to defendants	15	17
Answers to interrogatories	23	24
Amendment to answers to interrogatories	24	25
Plaintiff's Exhibit 1—Stipulation re evidence, etc	25	26
Plaintiff's Exhibit 18—Stipulation re evidence, etc	30	26
Statement of evidence	32	34
Testimony of Dr. Wm. M. Grosvenor	32	34
Alexander N. Grossman	44	47
Carl Burch	57	61
Arthur Schepel	58	62
John Erickson	58	63
Dr. Wm. M. Grosvenor (recalled)	59	63
Alexander Grossman (recalled)	72	79
Julius B. B. Stryker	74	81
Frank B. Shields	76	82
Glover M. Birk	93	101
Presley M. Stewart	96	104
Dr. Wm. M. Grosvenor	97	106

JUDD & DETWEILER (INC.), PRINTERS, WASHINGTON, D. C., JANUARY 17, 1928

INDEX.

	Original	Print
Testimony of George P. Hummer	130	141
R. C. Wendt	132	144
Otto Krieger	143	156
John H. Veneklaasen	143	156
Charles C. Pennington	144	157
Prof. P. C. Huntley	145	158
Robert M. Birk	155	169
Frederick E. Hood	157	172
Charles Worfel	158	172
Carl S. Miner	158	173
Dr. Wm. M. Grosvenor (recalled)	179	195
Plaintiff's Exhibit No. 10—Notice, September 22, 1919	208	227
No. 11—Reply to notice	219	228
No. 12—Notice	211	229
No. 20—Disclaimer	211	230
No. 22—Starch diagram	214	232
No. ——Armour glue list	215	232
Defendants' Exhibits "C" and "D"—Forest Products Laboratory Bulletins	218	235
Plaintiff's Exhibit No. 2—Reissue letters patent 13,436	229	247
Defendants' Exhibits—Marsden U. S. patent 376,445.	236	254
Higgins U. S. patent 579,827.	238	256
Higgins U. S. patent 642,329.	244	262
Cerf U. S. patent 698,632	248	266
Anderson U. S. patent 769,289.	249	267
Haake U. S. patent 813,647	254	272
Defendants' Exhibit "R"—Roret article on apparatine	255	273
"S"—Gerson & Sachse German patent 167,275	257	275
"T"—Kantorowicz German patent 88,468	260	278
"U"—Bredt German patent 156,148	262	280
"V"—Haake German patent 164,385	266	285
"W"—Bellmas German patent 110,957	269	288
"X"—Bellmas German patent 118,089	271	290
"Y"—Witt German patent 88,447	273	292
"Z"—Brueder German patent 114,978	275	295
Plaintiff's Exhibit AA—Pages from periodical "Glue"	277	296
23—Perkins U. S. patent 1,109,144	286	311
24—Perkins U. S. patent 1,238,810	293	317

	Original	Print
Defendants' Exhibit in Evidence—Brooks U. S. patent 779,583	303	327
Defendants' Exhibit in Evidence—Herzberg British patent 12,326 of 1897	305	329
Defendants' Exhibit in Evidence—Dornemann French patent 232,781	306	330
Defendants' Exhibit in Evidence—Calico printers French patent 366,903	309	333
Exhibits in Evidence—Opinions, Sessions, J., Solva case	314	339
Interlocutory decree, Solva case	316	340
Petition for appeal, Solva case	318	343
Order allowing appeal, Solva case	319	343
Assignments of error, Solva case	319	343
Petition for rehearing, Solva case	322	346
Plaintiff's circular, "The Perkins Glue Patent," sustained on appeal	324	348
Reply to petition for rehearing, Solva case	326	350
Docket entry of order denying rehearing, Solva case.	331	354
Mandate, Solva case	332	355
Defendants' Exhibit D-D—Memorandum for final decree, Solva case	336	359
Defendants' Exhibit C-C—Final decree, Solva case.	340	363
Injunction, Solva case	344	367
Order reopening case	345	368
Stipulation re exhibits	347	369
Testimony of Dr. Wm. M. Grosvenor	347	370
Leon S. Wolfe	354	377
William H. Walker	355	379
Master's order on accounting	369	393
Testimony of C. J. Moomaw	370	394
E. P. Stephan	372	396
J. A. Vanderveen	373	398
E. P. Stephan (recalled)	376	401
Edson W. Steward	379	405
Shirley D. Taylor	397	423
E. P. Stephan (recalled)	406	433
Stipulation as to testimony of Edson W. Steward	409	436
Testimony of E. J. Moomaw (recalled)	410	438
John H. Veneklaasen	415	443
R. C. Wendt	417	446
Fred M. Knappen	425	454

	Original	Print
Testimony of C. B. Allen	428	457
Shirley D. Taylor (recalled)	434	464
Richard M. Block	436	466
W. G. Seligman	437	467
John Erickson	449	480
Charles Kirchen	449	481
C. Gordon Wilson	450	482
M. A. Grossman	455	487
Albert K. Epstein	465	498
A. N. Grossman (recalled)	467	499
A. K. Epstein (recalled)	470	503
A. N. Grossman (recalled)	477	510
A. K. Epstein (recalled)	486	519
Shirley D. Taylor (recalled)	496	531
Dr. Wm. M. Grosvenor	501	536
A. N. Grossman (recalled)	533	571
Defendants' Exhibit—Statement of vegetable glue base	543	582
Stipulation re introduction of evidence from Hood case	548	586
Plaintiff's Exhibit—Oil paint and drug reports	549	587
Report of master on accounting	561	599
Defendants' exceptions to master's report	570	608
Exhibits—Perkins U. S. patent 1,078,691	573	611
Perkins U. S. patent 1,078,692	579	617
Grosvenor U. S. patent 1,200,489	584	622
Grosvenor U. S. patent 1,299,705	587	625
Stryker U. S. patent 1,299,809	593	631
Final decree	599	637
Petition for appeal	600	638
Order allowing appeal	600	638
Assignments of error	601	639
Bond on appeal (omitted in printing)	602	
Citation and service (omitted in printing)	603	
Stipulation re transcript of record	604	640
Order reviving cause	608	644
Proceedings in the United States circuit court of appeals, sixth circuit	609	645
Appearance of counsel (omitted in printing)	609	
Argument and submission (omitted in printing)	609	
Decree	609	645
Opinion, Denison, J	609- 1	645
Motion to stay mandate	609-17	660
Petition for leave to file bill of review	609-17	661
Order to show cause and stay mandate	609-24	666
Clerk's certificate (omitted in printing)	609-24	
Additional transcript of evidence filed in United States district court—Evidence introduced from case of Perkins Glue Company vs. Solva Waterproof Glue Co	609-27	667
Interrogatories to plaintiff and answers thereto	610	668

	Original	Print
Testimony of Frank Baker	620	678
James R. Pearce	633	693
James G. Greenup	637	698
Steven Johnson	641	702
F. E. Roberts	643	704
Lem Baker	647	709
Charles Langlotz	652	714
Frank Shanley	657	719
Nelson Windsor	657	720
Julius B. B. Stryker	667	731
William H. Wenrick	712	780
George L. Frost	716	785
Plaintiff's Exhibits 3 to 9—Trade paper articles re Perkins glue	720	789
Plaintiff's Exhibit No. 79—Process records	737	806
Stipulation to Poplar Bluff use	839	907
Defendants' Exhibits—Windsor letters Nos. 1 to 77	846	914
Stipulation re certain evidence, etc	893	960
Plaintiff's Exhibits—Baker letters Nos. 11 to 16	894	961
Defendants' Exhibits—Perkins letters Nos. 1 to 24 and Perkins' letter of May 30, 1907	898	965
Perkins' invoices Nos. 1 to 6	920	988
Tank invoice	923	991
Extracts from books of Walker-Garetson Co.	923	991
Schield invoices Nos. 1 to 6	924	992
Day Rubber Co. invoices	930	998
Brooklyn Cooperage invoices and papers Nos. 1 to 25-A	931	999
Plaintiff's Exhibit 83—German patent office papers	980	1039
Defendants' Exhibit 3—File-wrapper, contents of original Perkins patent No. 1,020,655	992	1052
Stipulation re transcript	1167	1188
Clerk's certificate (omitted in printing)	1167	
Order allowing certiorari	1168	1189

[fols. a & 1]

IN UNITED STATES DISTRICT COURT, WESTERN DISTRICT OF MICHIGAN, SOUTHERN DIVISION

In Equity. No. —

PERKINS GLUE COMPANY, Plaintiff,

v.

HOLLAND FURNITURE COMPANY et al., Defendants

On Reissued Patent No. 13436

BILL OF COMPLAINT—Filed Jan. 4, 1921

The Plaintiff, Perkins Glue Company, brings this its Bill of Complaint against Holland Furniture Company, J. A. Vanderveen, Jacob Vanderveen, Derk Vanderveen and Evart P. Stephen, defendants and alleges:

1. That Plaintiff is a corporation duly organized and existing under the laws of the State of Pennsylvania and a citizen and inhabitant of said State and having its principal place of business at Lansdale, County of Montgomery in said State; that, on information and belief, the above named defendant, Holland Furniture Company is a corporation duly organized and existing under the laws of the State of Michigan and an inhabitant of the Western District of Michigan, Southern Division, having a regular and established place of business at Holland, Ottawa County, in said Western District of Michigan, Southern Division; that, on information and belief, the above named defendant, J. A. Vanderveen is President of the defendant Holland Furniture Company and is a citizen, resident and inhabitant of Holland, Ottawa County in said Western District of Michigan, Southern Division; that, on information and belief, the above named defendant Jacob Vanderveen is Vice President of the Defendant Holland Furniture Company and is a citizen, resident and inhabitant of Holland, Ottawa County in said Western District of Michigan, Southern Division; that, on information and belief, the above named defendant Derk Vanderveen is Secretary and Treasurer of

the defendant Holland Furniture Company and is a citizen, resident and inhabitant of Holland, Ottawa County in said Western District of Michigan, Southern Division; that on information and belief, the above named defendant Evart [fol. 2] P. Stephan is manager of the defendant, Holland Furniture Company and is a citizen, resident and inhabitant of Holland, Ottawa County, in said Western District of Michigan, Southern Division; and that, on information and belief, the said defendants have, prior to the commencement of this suit and subsequent to the grant of the Letters Patent referred to hereinafter jointly and severally committed, within the said Western District of Michigan, and within the Southern Division thereof, acts of infringement upon the right granted plaintiff by said Letters Patent referred to hereinafter, and that the said J. A. Vanderveen, Jacob Vanderveen, Derk Vanderveen and Evart P. Stephan jointly and severally directed and controlled and actively participated in the infringing acts of the defendant corporation, complained of, and continue so to do.

2. That on the 2nd day of November, 1908, Frank G. Perkins, a citizen of the United States and then of South Bend, Indiana was the original, first and sole inventor of certain new and useful improvements in processes of making glue, comprising new methods for the making of glue and the products thereof; that said improvements were not known or used by others in this country before his invention or discovery thereof and not patented or described in any printed publication in this or any foreign country before his invention or discovery thereof or more than two years prior to his application for Letters Patent therefor, and were not in public use or on sale in this country for more than two years prior to his said application, and that no application or applications for said improvements had ever been filed by the said Frank G. Perkins or his legal representatives or assigns in any country foreign to the United States prior to his application for patent therefor in the United States, and the said application was never abandoned; and that on the said 2nd day of November 1908, the said Frank G. Perkins duly filed in the United States Patent Office an application for Letters Patent for said improvements.

3. That the said Frank G. Perkins having agreed for a valuable consideration to assign the entire right, title and interest in and to said improvements, application and Letters Patent to the Planters Manufacturing Co., a corporation of Maine, its successors and assigns, and the said Planters Manufacturing Co., having sold its entire assets to the Plaintiff herein, its successors and assigns, including all its right, title and interest in and to said improvements, application and Letters Patent, and the said Frank G. Perkins having died leaving a last will [fol. 3] and testament, and the said Will and Testament having been duly admitted to probate by the Register of Wills in and for the County of Montgomery, State of Pennsylvania, and Gertrude S. Perkins of South Bend, Indiana, formerly of Landsdale, Pennsylvania having been duly qualified and appointed as the Executrix of the said Frank G. Perkins; the said Gertrude S. Perkins, as Executrix of the said Frank G. Perkins did, by an assignment in writing bearing date the 31st day of March 1911, assign and transfer to the Plaintiff herein, its successors and assigns, the whole right, title and interest in and to said improvements, application and Letters Patent, which assignment requested that the Letters Patent for said improvements be granted to the Plaintiff herein, and which assignment was duly recorded in the United States Patent Office; whereby the Plaintiff became the owner of said improvements, application and Letters Patent.

4. That on the 19th day of March, 1912, all of the requirements of the statutes then in force having been complied with, Letters Patent of the United States Nos. 1,020,655 duly signed by the Commissioner of Patents, or his duly authorized assistant, and sealed with the seal of the Patent Office, were duly issued and granted on said application to the Plaintiff, its successors and assigns, whereby the Plaintiff became and is the owner of said Letters Patent and of all rights of action, claims and demands which have arisen by reason of any and all infringement of said Letters Patent since the issuance thereof.

5. That on or about the 17th day of May, 1912, the Plaintiff and owner of said Letters Patent, and Gertrude

S. Perkins, as Executrix of the said Frank G. Perkins, duly made application in writing to the Commissioner of Patents for the reissue of said Letters Patent 1,020,655, alleging that said Letters Patent No. 1,020,655 were inoperative or invalid by reason of a defective or insufficient specification, and that the errors arose through inadvertences, accident or mistake and without any fraudulent or deceptive intention; and surrendered said Letters Patent and paid the fees required by law, and in all other respects duly complied with the requirements of the Statutes of the United States in such case made and provided; whereupon the Commissioner of Patents caused new reissued Letters Patent for the same invention as that disclosed in said original Letters Patent No. 1,020,655 in accordance with the corrected specification, to be issued to Plaintiff in due form of law in the name of the United States of [fol. 4] America, under the seal of the Patent Office, signed by the Commissioner of Patents or his duly authorized assistant, and bearing date July 2, 1912 and numbered 13436; whereby the Plaintiff became and is the owner of said reissued Letters Patents No. 13,436 and of all rights of action, claims and demands which have arisen by reason of any and all infringement of said reissued Letters Patent, which, or a duly certified copy of which is now ready in Court to be produced.

6. That on or about October 30, 1913, the Plaintiff filed its bill of complaint in the United States District Court for the Northern District of Illinois, Eastern Division, against the Solva Waterproof Company, Burch-Kane Company et al., as defendants, alleging among other things infringement of said reissue Letters Patent 13436; that on or about August 3rd, 1915 said District Court for the Northern District of Illinois, Eastern Division, entered its decree by which it ordered, adjudged and decreed that said reissued Letters Patent 13436 were good and valid in law and especially as to claims 13, 16, 19, 24, 28 and 28 thereof; That thereupon the said defendants Solva Waterproof Glue Company, Burch-Kane Company et al., appealed from said decree to the United States Circuit Court of Appeals for the Seventh Circuit, and said Circuit Court of Appeals for the Seventh Circuit rendered an opinion holding that the part of the decree of the said District Court for

the Northern District of Illinois, Eastern Division sustaining the claims for a glue base process and product and for the so-called second step as such be reversed and the part of the decree which upheld the claims of the patent for the final process and the resultant product respectively, be affirmed; that thereafter and on or about January 31, 1918 the said defendants Solva Waterproof Glue Company, Burch-Kane Company et al., filed a petition for rehearing in said cause in the said United States Circuit Court of Appeals for the Seventh Circuit, and that said U. S. Circuit Court of Appeals for the Seventh Circuit denied said petition for rehearing; that on or about May 2nd, 1918 said Circuit Court of Appeals issued its mandate to the Honorable the Judges of the District Court of the United States for the Northern District of Illinois, Eastern Division, ordering, adjudging and decreeing that the part of said decree of said District Court of the United States for the Northern District of Illinois, Eastern Division sustaining the claims of said Letters Patent for a glue base process and product and for the so-called second step as such be reversed and that that part of the decree of said District Court which [fol. 5] upheld the claims of said Letters Patent for the final process and the resultant product respectively, be affirmed; and that, thereupon, on or about August 8th, 1918, the said District Court for the Northern District of Illinois, Eastern Division, entered its final decree by which it ordered, adjudged and decreed that said reissued Letters Patent No. 13436 were issued to the plaintiff Perkins Glue Company and are good and valid in law as to claims 19, 20, 28, 30, 31, 32 and 37 thereof, and invalid as to claims 11, 13, 16, 24 and 38 thereof.

7. That, thereupon, having reason to believe that through inadvertence, accident or mistake certain claims of said Letters Patent were too broad including that of which the applicant for said Letters Patent was not the first inventor, plaintiff duly entered in the United States Office, on or about the 6th day of February, 1919, its disclaimer of claims 1, 3, 4, 6, 7, 8, 16, 24, 25, 26 and 27 of said Letters Patent: (to wit: the claims for the glue base per se and for the process of making the glue base per se) and also disclaimed from claims 9, 10, 11, 12, 13, 14 and 38, of said Letters Pat-

ent, any process of making glue, excepting where the starch or starchy product or carbohydrate subjected to the process, is degenerated to the extent described in said Letters Patent, whereby the process results in the good as animal glue described in said Letters Patent, a duly certified copy of which disclaimer is now ready to be produced in court.

8. That prior to the said invention by the said Frank G. Perkins described in said Letters Patent, no vegetable glue had been produced or had gone into commercial use which had those qualities of animal glue such that it was suitable to glue up regular wood veneers and similar articles; that if any efforts had been made to produce such a vegetable glue they had been unsuccessful; that prior to the said invention there was a great and increasing need for such a vegetable glue, but that this need had remained unsatisfied; that when the Plaintiff's vegetable glue was placed upon the market, its merit was recognized and the Plaintiff's glue has gone into wide and extensive use, and the Plaintiff has built up in the said glue a new industry of large proportions; that the said invention is of great value and utility, and has constituted a distinct, radical and important advance in the art.

9. On information and belief, that prior to the commencement of this suit and since the granting of said Reissued Letters Patent, the said defendants have jointly combined and conspired with each other to infringe upon the rights [fol. 6] of the Plaintiff in and to said Letters Patent, and the said defendants have jointly and severally infringed upon the rights of complainant under said reissued Letters Patent No. 13436, in the Western District of Michigan and in the Southern Division thereof and elsewhere in the United States and now are jointly and severally infringing and conspiring and threatening so to continue to infringe said Letters Patent by using processes and making and using products which embody the invention described and claimed in said Letters Patent, and which processes are used and which products are made and used in infringement of Plaintiff's rights under said Letters Patent, the said defendants all the while intending and well knowing their acts to be in infringement of Plaintiff's rights under said Letters Patent, all to Plaintiff's great and irreparable

loss, damage and injury; and that Plaintiff has been and still is being deprived of great gains and profits, which it might and otherwise would have obtained, but which have been received and enjoyed and are being received and enjoyed by the said defendants by reason of the aforesaid unlawful acts and doings, but to what extent and how much exactly, Plaintiff does not know and prays a discovery thereof.

10. That the aforementioned acts and doings of said defendants and the said defendants' preparation to continue the same, in disregard and in defiance of Plaintiff's rights, have the effect to, and do, encourage and induce others to infringe and continue to infringe upon Plaintiff's rights under said Letters Patent No. 13436.

11. That the plaintiff, since the granting of said Letters Patent, has marked upon all products sold by it covered by said Letters Patent the word "Patented" together with the day, month, and year said Letters Patent were granted; and that the defendants have been duly and particularly notified of their infringement of Plaintiff's right under said Letters Patent, but on information and belief, that they have disregarded said notices and continued after such notices, and still continue, to infringe on Plaintiff's said rights under said Letters Patent, in the manner before stated, whereby the defendants have profited and the Plaintiff has been damaged; and that with the exception of the aforesaid infringement the public has generally acknowledged and acquiesced in the aforesaid rights of Plaintiff.

12. For as much as the Plaintiff can have no adequate relief, except in this court, the Plaintiff therefore prays:

1. For writs of subpœna issuing out of and under the seal [fol. 7] of this court directed to said defendants, Holland Furniture Company, J. A. Vanderveen, Jacob Vanderveen, Derk Vanderveen and Evart P. Stephan commanding them to appear and answer this bill of complaint (but not under oath, the oath being waived) and to perform and abide by such order and decree herein as the Court shall seem just.

2. For a permanent injunction, and a preliminary injunction pending this suit, restraining the defendants, and each of them, and their officers, directors, servants, agents, at-

torneys, associates, successors, confederates, salesmen and workmen, and any person acting for or on behalf of said defendants, from infringing upon the rights of the Plaintiff under the said Letters Patent.

3. For an account of profits and damages due to said infringement.

4. For cost.

5. For such other and further relief as the equities in the case may require.

Perkins Glue Company, by Julius B. B. Stryker, President. Knappen, Uhl & Bryant, Solicitors for Plaintiff. Gorham Crosby, of New York, N. Y., of Counsel for Plaintiff.

Duly sworn to by Julius B. B. Stryker. Jurat omitted in printing.

[fol. 8] IN UNITED STATES DISTRICT COURT

ANSWER—Filed Feb. 1, 1921

The joint and several answer of Holland Furniture Company, J. A. Vander Veen, Jacob Vander Veen, Derk Vander Veen, and Evart P. Stephan, defendants, to the bill of complaint of Perkins Glue Company, plaintiff

I. Defendants deny each and every allegation in plaintiff's bill of complaint, except as hereinafter admitted, or otherwise specifically answered.

II. Answering Paragraph 1 of said bill of complaint, the defendants are not informed, save by said bill of complaint, whether the plaintiff, Perkins Glue Company, is a corporation duly organized and existing under the laws of the State of Pennsylvania, and a resident and inhabitant of said State and having its principal place of business at Lansdale, County of Montgomery in said State; defendants admit that they are each of them residents, inhabitants and citizens of the Western District of Michigan, and of the Southern Division thereof, and that the Holland Furniture Company is a corporation duly or-

ganized and existing under the laws of the State of Michigan, having a regular and established place of business in Holland, Ottawa County, in said Western District of Michigan, Southern Division; defendants admit that the defendant Jacob Vander Veen is Vice-President of the defendant Holland Furniture Company, Derk Vander Veen is Secretary and Treasurer and Evart P. Stephan is Manager of the defendant Holland Furniture Company; defendants deny that prior to the commencement of this suit and subsequent to the grant of the letters patent referred to in said bill of complaint, they or either of them have jointly or severally committed within the said Western District of Michigan and within the Southern Division thereof any act or acts of infringement upon any rights granted plaintiff by said letters patent referred to in its bill of complaint; defendants deny that they, or either of them, jointly or severally have ever directed, or controlled, or actively participated in any infringing acts against the rights of the plaintiff.

III. Defendants and each of them deny that on the 2nd day of November, 1908, Frank G. Perkins, a citizen of the United States and then of South Bend, Indiana, was the original, first and sole inventor of certain new and useful improvements in processes for making glue, comprising new methods for the making of glue and the products thereof; deny that said alleged improvements were not known or used by others in this country before his invention or discovery thereof and not patented or described in [fol. 9] any printed publication in this or any foreign country before his invention or discovery thereof or more than two years prior to his alleged application for letters patent therefor, and were not in public use or on sale in this country for more than two years prior to his alleged application and that no application, or applications, for said improvements had ever been filed by the said Frank G. Perkins, or his legal representatives or assigns in any country foreign to the United States prior to his alleged application for patent therefor in the United States and that said application was never abandoned; deny that on the said 2nd day of November, 1908, the said Frank G. Perkins duly filed in the United States Patent Office an

application for letters patent for said improvements and leaves plaintiff to its proof thereof.

IV. The defendants are not informed, save by said bill of complaint, whether the said Frank G. Perkins having agreed for a valuable consideration to assign the entire right, title and interest in and to said improvements, application and letters patent to the Planters Manufacturing Company, a corporation of Maine, its successors and assigns, and the said Planters Manufacturing Company having sold its entire assets to the plaintiff herein, its successors and assigns, including all of its right, title and interest in and to said improvements, application and letters patent, and the said Frank G. Perkins having died leaving a last will and testament, and the said will and testament having been duly admitted to probate by the Register of Wills in and for the County of Montgomery, State of Pennsylvania, and Gertrude S. Perkins, of South Bend, Indiana, formerly of Lansdale, Pennsylvania, having been duly qualified and appointed executrix of the said Frank G. Perkins, the said Gertrude S. Perkins as executrix of the said Frank G. Perkins did, by an assignment in writing bearing date the 31st of March, 1911, assign, and transfer to the plaintiff, its successors and assigns, the whole right, title and interest in and to said alleged improvements, applications and letters patent, which alleged assignment requested that the letters patent for said improvements be granted to the plaintiff herein, and which alleged assignment was duly recorded in the United States Patent office; defendants deny that the plaintiff thereby became the owner of said alleged improvements, application and letters patent.

V. Defendants admit, on information and belief, that on the 19th day of March, 1912, letters patent of the United States No. 1,020,655, were issued to Perkins Glue Company, but defendants are not informed whether said Perkins [fol. 10] Glue Company was and is the same Perkins Glue Company as plaintiff named in said bill of complaint and leaves plaintiff to its proof thereof; the defendants deny that all of the requirements of the statutes then in force were complied with and deny that the plaintiff became and is the owner of said letters patent and all rights of action, claims and demands which have arisen by reason of the

infringement of said l tters patent since the issuance thereof.

VI. Defendants are not informed, save by said bill of complaint, that on the 17th day of May, 1912, plaintiff and owner of aforesaid letters patent No. 1,020,655 and Gertrude S. Perkins, as executrix of said Frank G. Perkins, duly made application in writing to the Commissioner of Patents for the re-issue of said letters patent No. 1,020,655, alleging that said letters patent No. 1,020,655 were inoperative or invalid by reason of a defective or insufficient specification and that the errors arose through inadvertence, accident or mistake and without any fraudulent or deceptive intention; or that the plaintiff and said Gertrude S. Perkins surrendered said letters patent and paid the fees required by law and in all respects duly complied with the requirements of the statutes of the United States in such case made and provided; or that the reissued letters patent aforesaid were for the same invention as that disclosed in said original letters patent No. 1,020,655; or that thereby the plaintiff became and is the owner of said reissued letters patent No. 13,436 and all rights of action, claims and demands which have arisen by reason of any and all alleged infringement of said reissued letters patent and leaves plaintiff to its proof thereof; defendants admit, on information and belief, that on July 2, 1912, the reissued letters patent No. 13,436 were issued to Perkins Glue Company, but are not informed whether said Perkins Glue Company was and is the same Perkins Glue as the plaintiff named in said bill of complaint and leaves plaintiff to its proof thereof.

VII. Answering Paragraph 6 of said bill of complaint, defendants are not advised of the matters therein set forth, save as appears in said bill of complaint and therefore leave plaintiff to its proof thereof.

VIII. Answering paragraph 7 of said bill of complaint, defendants say that they have no knowledge or information respecting the matters therein set forth and, therefore, leave plaintiff to its proof thereof.

IX. Defendants deny each and every of the allegations of paragraph of the bill of complaint deny that prior to [fol. 11] the alleged invention by the said Frank G. Perkins

described in said letters patent, no vegetable glue had been produced or had gone into commercial use which had those qualities of animal glue such that it was suitable to glue up regular wood veneers and similar articles; deny that efforts to produce such a vegetable glue had been unsuccessful; deny that prior to the said alleged invention there was a great and increasing need for such a vegetable glue but that this need had remained unsatisfied; deny that when the plaintiff's vegetable glue was placed upon the market its merit was recognized and the plaintiff's glue has gone into wide and extensive use and the plaintiff has built up in the said glue a new industry of large proportions; deny that the alleged invention is of great value and utility, and has constituted a distinct, radical and important advance in the art.

X. Defendants deny each and every of the allegations of Paragraph 9 of said bill of complaint; deny that prior to the commencement of this suit and since the granting of such reissued letters patent, or at any other time, the said defendants have jointly combined and conspired with each other to infringe upon the rights of plaintiff in and to said letters patent; deny that they have jointly or severally infringed upon the rights of plaintiff under said reissued letters Patent No. 13,436, in the Western District of Michigan and in the Southern Division thereof, or elsewhere in the United States; deny that they now are jointly and severally or jointly or severally infringing or conspiring and threatening to continue to infringe said letters patent by using processes and making and issuing products which embody the alleged invention described and claimed in said letters patent and which processes are used and which products are made and used in infringement of plaintiff's rights under said letters patent, the defendants all the while intending and well knowing their acts to be an infringement of plaintiff's rights under said letters patent, all to plaintiff's great and irreparable loss, damage and injury; deny that plaintiff has been and still is being deprived of great gains and profits which it might and otherwise would have obtained; deny that they have received and enjoyed and are receiving and enjoying such gains and profits and deny that they have done any of the alleged unlawful acts and doings set forth in paragraph 9 of the bill of complaint.

XI. Defendants deny each and all of the allegations of Paragraph 10 of the bill of complaint.

[fol. 12] XII. Defendants are not informed whether since the granting of said letters patent plaintiff has marked upon all products sold by it and covered by said letters patent the word "patented," together with the date, month and year said letters patent were granted; they deny that they have been notified of their alleged infringement of said letters patent, and deny each and all of the remaining allegations of paragraph 11 of the bill of complaint; deny that they have infringed or continue to infringe plaintiff's alleged rights under said letters patent and deny that with the exception of the alleged infringement, the public has generally acknowledged and acquiesced in the alleged rights of plaintiff.

XIII. Further answering, defendants deny that the alleged improvements described and claimed in said letters patent were not known or used by others in this country before the alleged invention or discovery thereof by the said Frank G. Perkins, named in said bill of complaint, and were not patented or described in any printed publication in this or any foreign country before his alleged invention or discovery thereof; or more than two years prior to his application for letters patent thereof, and were not in public use or on sale in this country for more than two years prior to his said application, and aver, on information and belief, that said improvements were known and used by others in this country before the alleged invention or discovery thereof by the said Frank G. Perkins, and were patented and described in printed publications in this and foreign countries before his invention or discovery thereof, and more than two years prior to his application for letters patent therefor, and were in public use or on sale in this country for more than two years prior to his said application; and more particularly answering the allegations of the bill of complaint in this respect, defendants aver that prior to the alleged invention or discovery of said improvements by said Frank G. Perkins and more than two years prior to his application for said letters patent said improvements had been patented and described in the following letters patent and printed publications, among others, to-wit:

Letters Patent of the United States

Nos.	376,445	dated	January	17, 1888	to	Marsden
	466,238	"	December	29, 1891	"	Higgins
	466,240	"	"	" "	"	"
	546,401	"	September	17, 1897	"	"
	576,403	"	February	2, 1897	"	"

[fol. 13]

Nos.	579,827	dated	March	30, 1897	to	Higgins.
	580,174	"	April	6, 1897	"	"
	604,584	"	May	24, 1898	"	"
	610,183	"	September	6, 1898	"	"
	642,329	"	January	30, 1900	"	"
	646,724	"	April	3, 1900	"	Brueder.
	698,632	"	April	29, 1902	"	Leon Cerf.
	742,469	"	October	27, 1903	"	Meyer.
	769,061	"	August	30, 1904	"	David.
	769,289	"	September	6, 1904	"	Anderson.
	813,647	"	February	27, 1906	"	Haake.
	833,634	"	October	16, 1906	"	Robison.
	845,791	"	March	5, 1907	"	Isaacs.
	851,380	"	April	23, 1907	"	Robeson.
	941,159	"	November	23, 1909	"	Militz.

Letters Patent of Great Britain

No. 38 of the year 1875, to Scott.
520 of the year 1879, to Lake.
5,881 of the year 1882, to Harland.
10,873 of the year 1886, to Rossi.
12,447 of the year 1896, to Higgins.
20,484 of the year 1908, to Harvey.
8,029 of the year 1890, to Steiger.
12,326 of the year 1897, to Herzberg.
8,331 of the year 1901, to Ekman.
21,973 of the year 1906, to Thompson,
20,484 of the year 1908.
12,020 of the year 1898.

Letters Patent of the Republic of France

No. 232,781, dated September 13, 1893, issued December 11, 1893, to Dornemann.

326,286, November 12, 1902, to Haake.
337,001, November 16, 1903, to Verneisel.
336,903, November 23, 1903, Calico Printed Association Limited.

Letters Patent of the Empire of Germany

No. 88,447 of July 23, 1895.
88,468 of September 13, 1895 to Jantorowicz.
110,957 of April 22, 1897 to Bellmas.
118,089 of April 22, 1897 to Bellmas.
114,978 of August 2, 1898 to Brueder.
134,301 of May 30, 1901 to Societe Anonyme.
156,148 of November 28, 1904 to Bredt.
167,275 of 1906.
164,385 of 1905.

[fol. 14] Publications Other than Letters Patent

Allen's Commercial Organic Analysis, published by J. A. Churchill, No. 7, Great Marlborough Street, W. London, in the year 1898, Vol. 1, page —.

"Encyclopedie-Roret, Fabrication, des Colles, Vegetales Animales et Composees, published at Paris, France, Librairie—Encyclopedique de Roret, Rue Hautefeuille 12, in the year 1889, pages 16 and 16 inclusive."

Comptes Rendues de L'Academie des Science, Paris, France, V. 141, 1905, pp. 1046 and 1047.

The "Chemistry and Practice of Mixing" Bean, published by Kirkham & Pratt, 5 Jersey Street, Amcoates, Manchester, England, in the year 1906, pp. 99, 106, 109, 114, 115, 120, 121 and 122.

XIV. And defendants aver, on information and belief that prior to the alleged inventions of the said Frank G. Perkins set forth in the letters patent mentioned in said bill of complaint, said alleged inventions, and each of them, have been known and used in this country by the following named person at the following named place, to-wit: Charles M. Higgins, Brooklyn, New York.

XV. And defendants aver, on information and belief, that more than two years prior to the filing of the application for the letters patent mentioned in said bill of com-

plaint, said alleged inventions, and each of them, have been in public use and on sale in this country by the following named persons at the following named places, to-wit: by Charles M. Higgins at Brooklyn, New York; by Frank G. Perkins and the Planters Company and others, at the factory of the Planters Company near Stamford, Florida; by said Perkins, Edgar Roberts, Frank Baker, Nelson Windsor, M. W. Hollacher, Stephen Johnson, James R. Pearce, James G. Greenup, Lemuel Baker and others, at the plant of the L. M. Palmer Company, now the plant of the Brooklyn Cooperage Company, at Poplar Bluff, Missouri; by said Frank G. Perkins, Frank Baker and others, at the factories of the Singer Sewing Machine Company at South Bend, Indiana and Cairo, Illinois; and by said Perkins, Baker and others at the factory of the Wilts Company at Plymouth, North Carolina.

XVI. Further answering, defendants aver that said letters patent contain and include subject-matter not contained or disclosed in the original application on which said Letters Patent No. 1,020,655 were granted and not invented or discovered prior to the filing of said application, or by Frank G. Perkins who signed and made said application, but invented or discovered by others than said Per-
[fol. 15] kins and long after his said application for patent had been filed, and introduced by amendment into said application long after the filing thereof.

XVII. Further answering, defendants deny that they, or either of them have, either joined or severally, at any time or place made or used the alleged inventions and improvements described and claimed in said letters patent named in said bill of complaint, or either of them, or in any manner infringed said letters patent, or either of them, or violated the rights of the plaintiff thereunder, and pray to be hence dismissed with their costs in this behalf sustained.

Holland Furniture Co., J. A. VanderVeen, Jacob VanderVeen, Derk VanderVeen, and Evart P. Stephan, by Travis, Merrick, Warner & Johnson, their Solicitors, Grand Rapids, Mich. Rector, Hibben, Davis & Macauley, Solicitors and of Counsel for Defendants.

In United States District Court

Interrogatories to the Defendants Under Equity Rule 58— Filed Jan. 4, 1921

And now comes the Plaintiff, by it- solicitors, and pursuant to Equity Rule 58, submits the following interrogatories to the defendants:

1. Has the Defendant Company in 1919 or 1920 used vegetable glue for gluing together veneered stock for furniture which glue was made from vegetable glue material not obtained from the plaintiff, Perkins Glue Company?

2. Has the defendant Company between January 1, 1915, and December 1, 1920, made vegetable glue by mixing vegetable glue material (not purchased or obtained from plaintiff, Perkins Glue Company) with water and a solvent or [fol. 16] chemical to produce a vegetable glue and used it for glueing together veneered stock for furniture?

3. Has the Defendant Company in the year 1919 or the year 1920 made vegetable glue by dissolving vegetable glue material (not purchased or obtained from plaintiff, Perkins Glue Company) with three parts or less of water and less than 10% of caustic soda to produce a vegetable glue and used it for glueing together veneered stock for furniture panels?

4. State the proportions of water, and solvent or chemical, to dry vegetable glue material, and the nature of the solvent or chemical, used in making the vegetable glue referred to in interrogatory No. 2.

5. Was the glue referred to in interrogatory No. 2 and mixed in a mixing kettle and allowed to flow down a pipe to spreading apparatus which applied it to wood veneers?

6. Was the glue referred to in interrogatory No. 3 mixed in a mixing kettle and allowed to flow down a pipe to spreading apparatus which appied it to veneers to be used in building up stock for furniture?

7. Did the spreading apparatus referred to in interrogatories 5 and 6 have corrugated or grooved iron rolls for applying the glue to the veneers?

8. Did the vegetable glue material used in making the glue referred to in interrogatories 2 and 3 or either of them comprise starch material, and if so, state what kind of starch.

9. Where, when and of whom did the Defendant Company purchase or obtain the vegetable glue material used in making glue referred to in interrogatories 2 and 3?

10. Was the glue referred to in interrogatories 2 and 3 prepared by mixing the vegetable glue material with water and adding slowly and stirring in a solution of caustic and water?

11. If so, what was the percentage of the caustic in the caustic solution, how many pounds of water was added to every hundred pounds of dry vegetable glue material before the caustic solution was added, and how much caustic solution was added to every hundred pounds of the vegetable glue material in the first mixture?

12. Was the glue referred to in interrogatory 2 or 3 used to glue up any of the following kinds of veneered stock, and if so state which: veneered stock for (1) table tops (2) desk tops, sides, slides and fronts (3) dresser tops, sides or fronts (4) chiffonier tops, sides or fronts (5) bureau tops, sides or fronts (6) cabinets (7) davenports (8) wash stands [fol. 17] panels (9) chair seats or backs (10) bed-steads (11) other panels?

13. Prior to its use of vegetable glue for glueing up veneered stock for furniture, did the defendant Company use animal glue for this purpose?

14. Has the Defendant Company since January 1, 1915, purchased or obtained vegetable glue material from the National Process Company, International Process Company, Kane Manufacturing Co. or Thomas B. Kane and used it to make glue as specified in interrogatories Nos. 2 or 3 and if so, please state from which of the above concerns it has purchased or obtained vegetable glue material and used it to make up such glue?

15. Was the vegetable glue material so purchased or obtained as specified in interrogatory 14 dissolved up by the

Defendant Company with three parts of water or less and caustic soda to produce a glue which was applied by spreading apparatus or machinery for glueing up high grade veneered stock for furniture?

16. Did the Defendant Company in 1915, 1916, 1917 or 1918 purchase or obtain from the Plaintiff Perkins Glue Company vegetable glue material and make vegetable glue therefrom and use such glue for glueing up veneered stock for furniture and if so, state which years.

17. Did a representative of the Plaintiff, Perkins Glue Company, visit the Defendant Company's plant and demonstrate therein how to prepare and use said Plaintiff's vegetable glue material?

18. Was the vegetable glue referred to in interrogatory No. 15 made and used in the manner specified in interrogatories 3, 6 and 7?

19. What officer or officers of the Defendant Company directed the purchase and use of the vegetable glue material (not purchased or obtained from the Plaintiff, Perkins Glue Company) which is used?

20. Did the defendant, Evart P. Stephan directed the purchase and use of vegetable glue material referred to in interrogatory No. 14?

21. Did the Defendant Company shortly after August 20, 1915, receive a letter reading substantially as follows:

[fol. 18] "August 20, 1915.

Holland Furniture Company, Holland, Michigan.

GENTLEMEN:

Mr. Stephan

We beg to inform you that the Court has issued the injunction Writ provided for in the Opinion rerecently handed down in our suit for infringement, against the Solva Waterproof Glue Company, et al., restraining the Solva Waterproof Glue Company, Burch-Kane Company, Lowell E. Burch, and Thomas B. Kane from using processes and from making and selling products and selling to others products

to be used, in infringement of our Letters Patent Reissue No. 13,436 and 1,020,656, and from infringing in any way upon said Letters Patent.

We shall proceed against any other infringers or contributory infringers of our Patents in such manner as may prove necessary to protect our rights. We believe that it is your intention to continue the use of vegetable glue and we would be glad to supply all of your requirements in this line. Aside from any question of Patents we know that you are convinced of the superior quality of Perkins Glue and we will very much appreciate your letting us hear from you in this matter regarding your requirements.

Yours respectfully, Perkins Glue Company, by Secretary."

GSP—MM.

22. Did Defendant Company on or about March 16, 1917, send the following letter to the plaintiff?

"March 16, 1917.

Perkins Glue Co., South Bend, Indiana.

GENTLEMEN: We have yours of the 15th and wish to say what we told your representative that the Solva Glue people came to us and informed us that the injunction had been dissolved and that they were now at liberty to go ahead and make vegetable glue again and that they had a proposition which was second to none in the country.

Of course we did not expect to buy glue of them and use [fol. 19] your machine, but our intention was if their glue was O. K. and they were no longer under Court restraint to buy a machine outright as we well could afford to do this at the price they are selling their glue, compared with the price you are selling your glue at.

We find however that their glue is not up to the standard and is not the quality of yours but even if it was we would not buy a glue of any firm who is selling it contrary to orders of a Court of the United States, as we believe in law and order and wish to abide by same. The Solva people cannot sell us any glue again at any time, now or in the future, if your statement is correct and theirs is false, as

we do not want to deal with people who try and do business under false colors.

Respectfully yours, (Signed) E. P. Stephan, Mgr. Holland Fur. Co."

EPS/R.

23. Did the Defendant Company shortly after March 20, 1917, receive a letter reading substantially, as follows:

"March 20, 1917.

Holland Furniture Co., Holland, Mich.

GENTLEMEN: We have your letter March 16th and regarding the suit which we had against the Solva Glue Company and the injunction which was the result of this trial, we are enclosing herewith a copy of decision of the Court in said suit and the injunction has not been dissolved and you can judge for yourselves whether you wish to use glue sold by this concern.

We are glad to note that it is your intention to continue the use of your glue and we, of course, are very glad to sell you the same, and are sure that you can understand that it would be impossible for us to furnish you our equipment for the use of other glue. With the assurance in your letter of March 16th, we shall be glad to continue our friendly relations with you.

Yours very truly, Perkins Glue Company, by Vice President."

GSP. MAC—Enc.

[fol. 20] 24. Did the Defendant Company shortly after March 6, 1918, receive a letter reading substantially as follows:

"March 6, 1918.

Holland Furniture Co., Holland, Mich.

GENTLEMEN: We are manufacturing a vegetable veneer glue which is guaranteed not to infringe on any patent, and the price we will name you on same is about 50% lower than our competitors are quoting. In other words, we can furnish you our glue at 8½¢ per lb. f. o. b. Chicago in less than carloads, and 8¢ per lb. Chicago in carload lots.

This glue is used with practically the same amount of water that you are using with your present product and the surface spread, pound to pound, will cover the same number of square feet; while the holding strength is acknowledged to be far superior to that of any other vegetable veneer glue on the market.

We would like to make you a shipment of one or two thousand pounds of this material, and upon its arrival have our practical man call and demonstrate same, with the understanding if the glue is unsatisfactory in any way there will be no charges for the sample shipment.

Hoping you will grant us your permission to make the sample shipment on the above basis, we are

Yours very truly, Kane Manufacturing Co., by T. B. Kane."

TBK/T.

25. Did the Defendant Company on or about March 7, 1918, send to the Plaintiff a letter reading substantially as follows, enclosing the letter referred to in interrogatory No. 24?

"Holland, Mich., 3-7-18.

"Perkins Glue Co., South Bend, Indiana.

GENTLEMEN: We are enclosing a letter we received this morning which might be of interest to you. Would like to have a reply from you regarding same, and also ask you to kindly return this letter.

Yours very truly, Holland Furniture Co."

EPS/B.

[fol. 21] 26. Did Defendant Company shortly after March 9, 1918, receive a letter substantially as follows:

"South Bend, Indiana, March 9, 1918.

Holland Furniture Co., Holland, Mich.

GENTLEMEN: We have you- letter March 7th, enclosing letter from the Kane Mfg. Co.

Regarding this proposition we have only to say that we do not know of any satisfactory vegetable veneer glue being placed on the market at this time which does not in-

fringe our patents. We sent you in January notice of the decision of the Court of Appeals in the suit which we brought some three years ago against the Solva Waterproof Glue Company and we quoted in our notice from the Court's decision.

Regarding the guarantee that the glue sold you does not infringe any patent, would suggest that a cash bond be required, which is the only guarantee which is of value.

Regarding the quality of the substitutes which are being offered for Perkins Glue, we would advise you to look into this matter and investigate any concerns whose names are given you purporting to use the substitutes.

Thanking you for sending us the letter, which we return herewith, we are

Yours very truly, Perkins Glue Company, by Vice President."

GSP/MAC.

27. Will you furnish a representative of Plaintiff within ten days for use in this suit, a fair sample of the dry vegetable glue material being used by the Defendant Company, and not obtained from the Plaintiff and which glue material the Defendant Company is regularly using for making vegetable glue for glueing up veneered stock for furniture?

28. Will you furnish a representative of Plaintiff within ten days for use in this suit a fair sample of the vegetable glue already mixed and ready to be applied to the veneers, which glue you are regularly using for glueing up veneered stock for furniture and the glue material or base for which [fol. 22] glue, the Defendant Company did not obtain from the Plaintiff, said sample to be sealed up tight in a glass jar.

29. Will you furnish a representative of Plaintiff within ten days for use in this suit, a fair sample of the solvent which defendant Company has been regularly using in making up its furniture veneer glue from the vegetable glue material not obtained from the Plaintiff.

30. Will you permit a representative of Plaintiff to inspect within ten days, the regular glueing operations carried out by the Defendant Company in the glueing up of

veneered stock for furniture with vegetable glue the dry vegetable glue material for which was not obtained from the plaintiff.

NOTE.—The above interrogatories are to be answered by the defendant Evart P. Stephan or such other officer or officers as have a better knowledge of any of the facts inquired about.

Dated, January 4th, 1920.

Knappen, Uhl & Bryant, Solicitors for Plaintiff.
Gorham Crosby, of New York, N. Y., of Counsel for Plaintiff.

[fol. 23] IN UNITED STATES DISTRICT COURT

ANSWERS TO INTERROGATORIES—Filed February 1, 1921

1. On information and belief, yes.
2. On information and belief, yes.
3. On information and belief, yes.
4. One pound glue to one and one-half pounds water—caustic soda.
5. On information and belief, yes.
6. On information and belief, yes.
7. On information and belief, yes.
8. Do not know.
9. Kane Mfg. Co., Chicago, Ill.
10. On information and belief, yes.
11. 100 pounds glue to 150 pounds water—4 pounds caustic soda.
12. Table tops, desk tops, side, fronts, dresser tops, sides, fronts, chiff tops, sides and fronts, bed panels.
13. On information and belief, yes.
14. International Process Co. and Kane Mfg. Co.
15. On information and belief, yes.
16. Yes,—1916, 1917, and 1918.
17. On information and belief, yes.
18. On information and belief, yes.
19. The Manager.
20. On information and belief, yes.
21. Have no record of same.

22. On information and belief, yes.
23. On information and belief, yes.
24. On information and belief, yes.
25. On information and belief, yes.
26. Have no record of same.
27. On information and belief, yes.
28. On information and belief, yes.
29. On information and belief, yes.
30. On information and belief, yes.

Evart P. Stephan.

Duly sworn to by Evert P. Stephan. Jurat omitted in printing.

[fol. 24] IN UNITED STATES DISTRICT COURT

AMENDMENT TO ANSWERS TO INTERROGATORIES—Filed April 11, 1921

And now comes the defendant, by its solicitors, and amends its answers to interrogatories submitted by plaintiff as follows:

4. About two and one-quarter parts of water to one part by weight of dry vegetable glue and four parts by weight of caustic soda to one hundred parts of dry vegetable glue material.

11. a. Four pounds of caustic soda was dissolved in 8½ pounds of water. b. 216½ pounds of water was added to every 100 pounds of dry vegetable glue material before the caustic solution was added C. 12½ pounds of caustic solution was added to every 100 pounds of the vegetable glue material in the first mixture.

9. In addition to vegetable glue material purchased from Kane Manufacturing Company vegetable glue material was purchased from the International Process Company.

John B. Macauley, of Counsel.

[fol. 25] IN UNITED STATES DISTRICT COURT

PLAINTIFF'S EXHIBIT 1

Stipulation

Whereas, in the case of Perkins Glue Company, Plaintiff, vs. Solva Waterproof Glue Co., et al., Defendants, heard and decided by the United States District Court for the Northern District of Illinois, Eastern Division certain testimony and evidence was adduced which counsel herein of one party or the other, believe to be material and relevant to this case and it is desired to avoid the time and expense of retaking said testimony and evidence in this case.

Now, therefore.

1. It is hereby stipulated and agreed by and between counsel for the respective parties hereto, that any or all of the following items of testimony and evidence, taken in said Solva case and printed in the transcript of record in that case on appeal, at the pages indicated (except as otherwise specified) may be offered in evidence in this case by either party, and with the consent of the Court, reveiced in evidence at the trial hereof with the same force and effect as if duly taken in this case in the usual manner, subject to correction upon comparison with the original court records and exhibits should error be found to occur and subject to any objections the adverse party may desire to make as to materiality or relevancy or otherwise except as to the manner of taking same and introducing it herein, provided that if any of the testimony or evidence of any item is introduced by either party, all of the testimony and evidence listed in such item below shall be introduced by such party, and such testimony of witnesses for plaintiff in said Solva suit as is introduced herein shall be received and considered as if taken by plaintiff herein, and such testimony for defendants in said Solva suit as is introduced herein shall be received and considered as if taken by defendants herein.

Item 1. All the depositions of Frank Baker, James R. Pearce, James G. Greenup, Stephen Johnson, Frederick E. Roberts, Lem Baker, Charles Langlotz and Frank Shanley on pages 749 to 847 inclusive. Stipulation and Letter on

pages 62 and 63. Perkins Letter dated May 30, 1907 on page 832. Stipulation as to Poplar Bluff use on pages 848 to 857 inclusive. Defendants Exhibit Perkins Letters on [fol. 26] pages 991 to 1013 inclusive, and Defendants Exhibits Perkins Letters Nos. 2, 3, 7, 9 and 22 (offered in evidence but not printed in said record). Defendants Exhibit Windsor Letters on pages 1014 to 1059 inclusive and also defendants Exhibit Windsor Letters Nos. 8, 10, 12, 16, 20, 21, 23, 25, 35, 37, 39, 41, 45, 46, 59, 60, 61, 62, 71, 72, 74 and 75 (Offered in evidence by Defendants but not printed in said record) Brooklyn Cooperage Invoices and papers on pages 1059 and 1105 inclusive. Shield Invoices on pages 1106 to 1111 inclusive. Tank Invoice on page 1115. Day Rubber Co. invoice on page 116. Walker Exhibit on page 1117. Perkins Invoices on pages 1112 to 1114 inclusive.

Item 2. Interrogatories to the corporate complainant and answers thereto on pages 45 to 61 (inclusive).

Item 3. Testimony of Julius B. B. Stryker on pages 91 to 108 inclusive 380 to 412 inclusive, pages 422 to 427 inclusive, pages 445 to 459 inclusive, and pages 464 to 473 inclusive, including the letter on page 422 and process record on page 446. Exhibit 79 Process Records on pages 874 to 941 inclusive.

Item 4. Plaintiff Exhibit Baker Letters on pages 1207 — 1211 inclusive.

Item 5. Plaintiff's Exhibits 3, 4, 5, 6, 7, 8, 9, 10 and 11 on pages 1211 to 1233 inclusive.

Item 6. Testimony of Julius B. B. Stryker on pages 91 to 108 inclusive.

Item 7. Testimony of Nelson Windsor on pages 185 to 204 inclusive.

Item 8. Testimony of William H. Wenrick on pages 368 to 377 inclusive.

Item 9. Deposition of George L. Frost on pages 859 to 866 inclusive.

Item 10. Plaintiff's Exhibit 83 on pages 1259 to 1269 inclusive.

2. It is further stipulated and agreed by and between counsel for the respective parties hereto, subject to correction as error may appear.

(a) That ordinary printed Patent Office copies of patents of the United States and foreign countries may be introduced in evidence by either party and accorded the same force and effect as if duly certified.

[fol. 27] (b) That British provisional specification 38 of 1875 and 5881 of 1882 became effective as printed publications on or prior to November 8, 1883.

(c) That each of the following British patents was sealed on or about the date appearing opposite the same in the following list:

520	of the	year	1879,	sealed July 25, 1879.
10873	"	"	" 1886,	sealed August 26, 1886.
8029	"	"	" 1890,	sealed May 19, 1891.
12447	"	"	" 1896,	sealed September 22, 1896.
12326	"	"	" 1897,	sealed May 17, 1898.
12020	"	"	" 1898,	sealed August 1, 1899.
8331	"	"	" 1901,	sealed April 15, 1902.
21973	"	"	" 1906,	sealed October 31, 1907.

(d) That the book Allen's Commercial Analysis was published as it purports in the year 1898; that Vol. 141 of Comptes Rendues de la Academie des Sciences, Paris, France, including pages 1046 and 1047 thereof was published as purported during the year 1905.

(e) That the following portions of books entitled as follows became printed publications respectively, in the years 1889 and 1893 and that the same may be offered in evidence without further proof thereof. Encyclopedie-Roret: Fabrication Des Colles Vegetables Animales Et Composses. Paris, Librarie Encyclopedique De Roret, Rue Heutefeuille 12. Pages 1 to 23 inclusive.

A Dictionary of Applied Chemistry by T. E. Thorpe B. Sc. (Vict.) Ph. D. D. Sc. (Dubl.) F. R. S. Professor of Chemistry in the Royal College of Science, London Assisted by Eminent Contributors. In Three Volumes, London, Longmans, Greene & Co. and New York, 15 East 16th Street, 1893. The article on Starch, pages 558 to 592 inclusive Volume III.

3. It is further stipulated and agreed by and between counsel for the respective parties hereto that copies of any or all of the printed publications and patents and translations, offered in evidence in said Solva case and printed in said transcript of record thereof on pages 1275 to 1342 inclusive, may be offered in evidence in this case by the defendants, and with the consent of the Court, received in evidence at the trial hereof, with the same force and effect as the original or duly certified copies thereof and the said translations shall be accepted as correct, subject to correction as error may appear, and subject to any objections [fol. 28] plaintiff may desire to make as to relevancy or materiality or otherwise except as to the anner of proving same.

4. It is further stipulated and agreed by and between counsel for the respective parties hereto that the following foreign patents became effective as printed publications and patents upon the respective dates set down below.

French Patent 326,286 Haake May 21, 1903.
French Patent 337,001 Virneisel March 24, 1904.
German Patent 114,978 Brueder November 2, 1900.
" " 118,089 Bellmas March 1, 1901.
" " 110,957 April 21, 1900 Bellmas.
" " 164,385 October 21, 1905 Haake.
" " 134,301 September 4, 1902 Societe Anonyme.
German Patent 156,148 November 28, 1904 Bredt.
" " 88,468 August 27, 1896 Kantorowicz.
" " 167,275 January 31, 1906 Gerson & Sachse.
French Patent 232,781 December 11, 1893 Dornemann.
German Patent 88,447 August 27, 1896 Witt.

5. It is further stipulated and agreed by and between counsel for the respective parties hereto.

(a) That the plaintiff, Perkins Glue Company, is a corporation duly organized and existing under and by virtue of the laws of the State of Pennsylvania and is a citizen and inhabitant of said State, and has its principal place for doing business at Landsdale, in the county of Montgomery in said State.

(b) That United States Reissue Letters Patent No. 13436 for improvements in Glue and Method of Making the Same, reissue July 2, 1912, were issued and granted to the plaintiff, Perkins Glue Company, and that the Perkins Glue Company is and always has been the sole owner thereof and of all interest therein.

6. It is further stipulated and agreed by and between counsel for the respective parties hereto, that at the trial hereof, for the purpose of showing the court what was before the Courts in said Solva case but for no other purpose, either of the parties hereto may offer in evidence a printed copy of the transcript of record in said Solva case, as a physical exhibit.

[fol. 29] 7. It is further stipulated and agreed that either party may offer in evidence at the trial hereof a copy of the depositions of Shields, Birk and Stewart taken in the case of Perkins Glue Company vs. West Michigan Furniture Co. et al. in Equity 1899, in this court, and with the consent of the court, such depositions shall be received in evidence at the trial hereof with the same force and effect as if said depositions had been originally and duly taken in this case and the original of said depositions duly filed herein.

8. It is further stipulated and agreed for the purposes of this case that defendant corporation has purchased vegetable glue base from the International Process Company, which glue base was made or prepared in the manner testified to by deponents, Shields, Birk and Stewart, in the above mentioned depositions, and that such glue base was used by defendant corporation to make vegetable glue as stated in Plaintiff's interrogatories 1, 2 and 3, said glue being prepared and used as stated in the defendant's answers to interrogatories 5, 6, 7 and 10.

9. It is further stipulated and agreed, for the purpose of this case, that the treated cornstarch or thin boiling cornstarch, referred to in the deposition of Frank B. Shields as having been used in the manufacture of the glue base, was manufactured according to well-known methods substantially as follows:

90° thin boiling cornstarch made by taking the wet cornstarch from the tabling operations and treating it with

dilute sulphuric acid of about 2/10% strength at a temperature of about 140° F. until the desired fluidity has been reached as determined by testing samples, when the material is neutralized or washed or both; the starch being thus degenerated so that when pasted either with water or water and alkali it produces a less viscous solution.

40° thin boiling cornstarch is made in substantially the same way except that the treatment is not carried quite so far, either a weaker acid, shorter time, lower temperatures or a combination of the three being used.

Stipulated further that Plaintiff will not move for a preliminary injunction prior to March 1, 1921.

Rector, Hibben, Davis & Macauley, of Counsel for Defendants. Gorham Crosby, of Counsel for Plaintiff.

Dated April 18th, 1921.

[fol. 30] In United States District Court

Plaintiff's Exhibit 18

Stipulation

Whereas in the cases of Perkins Glue Company, Plaintiff vs. Fred E. Hood et al., Defendants, Equity 1898 and Perkins Glue Company, Plaintiffs, vs. West Michigan Furniture Company et al., Defendants, Equity 1899 heard and decided together in the District Court of the United States for the Western District of Michigan, Southern Division, certain testimony and evidence was adduced which counsel herein for one party or the other, believe to be material and relevant to this case, and it is desired to avoid the time and expense of retaking said testimony and evidence in this case.

Now, therefore,

It is hereby stipulated and agreed by and between counsel for the respective parties hereto:

1. That copies of any or all of the following items of testimony and evidence, taken in said equity cases 1898 and 1899 may be offered in evidence in this case by either party, and

with the consent of the Court, received in evidence at the trial hereof with the same force and effect as if the original had been duly taken in this case in the usual manner, subject to correction upon comparison with the original court records, and subject to any objections the adverse party may desire to make as to the materiality or relevancy or otherwise except as to the manner of taking the same and introducing the same herein; provided that if any of the testimony or evidence of any item is introduced by either party all of the testimony and evidence listed below in such item shall be introduced by such party, and such testimony and evidence of plaintiff in said equity cases 1898 and 1899 as is introduced herein shall be received and considered as if taken by plaintiff herein and such testimony and evidence of defendants in said equity cases 1898 and 1899 as is introduced herein shall be received and considered as if taken by defendants herein.

Item 1. Testimony of Julius B. B. Stryker on pages 6 to 10 inclusive and 154 and 155 of the typewritten record.

Item 2. Testimony of George P. Hummer on pages 92 to 97 inclusive of the typewritten record.

Item 3. Testimony of R. C. Wendt on pages 98 to 125 inclusive of the typewritten record.

Item 4. Testimony of Otto Kruger on pages 126 and 127 of the typewritten record.

[fol. 31] Item 5. Testimony of John H. Veneklaasen on pages 128 and 129 of the typewritten record.

Item 6. Testimony of Charles C. Pennington on pages 130, 131, 132 of the typewritten record.

Item 7. Testimony of Prof. Phil. C. Huntley on pages 133 to 153 inclusive of the typewritten record.

Item 8. Testimony of Robert M. Burk on pages 156 to 162 inclusive of the typewritten record.

Item 9. Testimony of Frederick E. Hood on pages 163 to 165 inclusive of the typewritten record.

Item 10. Testimony of Charles Worfel on pages 165 to 167 inclusive of the typewritten record.

Item 11. Plaintiff's Exhibit 10 defendants' notice retest, Plaintiff's Exhibit 11 Plaintiff's consent to tests, Plaintiff's Exhibit 12 Defendant's Notice of tests at Armour Institute.

Item 12. Any or all of Plaintiff's Exhibits 19 to 40 inclusive and 43 to 58 inclusive.

Item 13. Plaintiff's Exhibit 41 Disclaimer filed in connection with patent in suit.

Item 14. Plaintiff's Exhibit 42 Patent Office copy of file wrapper contents on patent in suit.

Item 15. Plaintiff's Exhibit 59 microphotograph.

Item 16. Plaintiff's Exhibit 60 microphotograph.

Item 17. Plaintiff's Exhibit 61 Diagram of Starch Structure.

Item 18. Plaintiff's Exhibit Armour Glue List.

Item 19. Defendants' Exhibit A Sample Test Block.

Item 20. Defendants' Exhibit B Sample Test Block.

Item 21. Defendants' Exhibit C Forrest Products Lab. Bulletin.

Item 22. Defendants' Exhibit D Forrest Products Lab. Bulletin.

Item 23. Defendants' Exhibit E Panels.

Item 24. Defendants' Exhibit F Gerson & Sachse Base.

Item 25. Defendants' Exhibit A-A pages from Periodical Glue.

Item 26. Defendants' Exhibit E-E File Wrapper Contents of original patent.

2. That plaintiff may introduce any or all of the testimony of Doctor William M. Grosvenor and in case any portion or such testimony is introduced defendants may introduce any other or all portions of said testimony.

3. That defendants may introduce any or all portions of the testimony of Carl S. Miner, and if any portion of por-

[fol. 32] tions of said testimony is so introduced, plaintiff may introduce any or all other portions of the testimony.

Gorham Crosby, of Counsel for Plaintiff. Rector, Hibben, Davis & Macauley, of Counsel for Defendants.

Dated April 5, 1921.

IN UNITED STATES DISTRICT COURT

Statement of Evidence—Filed Nov. 2, 1921

Doctor William M. Grosvenor, a witness called on behalf of plaintiff, testified in open Court, on June 27, 1921, as follows:

That he is the same William Grosvenor who testified in the case of the Perkins Glue Company against the West Michigan Furniture Company, et al., and against Hood & Wright, et al., that he has visited the plant of defendant, Holland Furniture Company, and examined their method of making glue and their gluing operations. This was in the end of January, 1921. As to the method of making the glue, the glue base was mixed with about two and one-eighth parts of water and about four per cent caustic soda was added dissolved in something like an eighth of a part of water, the total being two and a quarter of water to one of glue base, and four per cent of caustic soda on the weight of the glue base. The suspension of the starch in the water was slightly warmed before the caustic soda was added, and the caustic soda was run in in about fifteen minutes, afterwards the temperature was slowly raised. They did not take the temperature when I was there, but the mixture was observed and it came across twenty minutes or so after the caustic was put in, depending, I suppose, on the rate of the addition. The total mixture took about 55 minutes, then cold water was supplied and the mixture cooled before use with continued stirring. The cold water was applied to the [fol. 33] jacket instead of steam. The precise proportions I didn't see weighed out, for that I am relying largely on the statements of the workmen, and an examination of the mixture afterwards. The witness further testifies as follows:

Q. Did you take a sample of the starch base?

A. I did.

Q. Did you examine it?

A. I did.

Q. What did you find as to the nature of that base?

A. The glue was substantially the same as that described in the Perkins patent in suit.

Q. I asked as to the base.

A. I beg pardon. The base was substantially the same as that described in the Perkins patent in suit, and examined under the microscope it showed the form of the granules substantially unchanged when wetted with cold water. The base when heated with water to one hundred and seventy degrees produced a workable heavy fluid similar to the glue, not a stiff unworkable jelly. The base when mixed with two to three parts of water and caustic soda, produced a glue like Perkins glue, and the base therefore corresponded to most of the characterizations given in the Perkins patent; the nine to one boil up test given in the patent is specially mentioned in connection with the acid treated or processed Cassava, so that that wouldn't be expected to necessarily apply; and it showed a very high figure on that test. The microscopic examination showed that the base consisted practically of Cassava with perhaps a trace of potato or corn, not a considerable proportion of all.

Q. Doctor, how did the glue, the fluid glue, which you saw the defendant using compare as to the fluidity penetration, adhesive, and cohesive characteristics of animal glue and of the glue of the Perkins patent?

A. It had all the fluidity, penetration, adhesive and cohesive characteristics of the glue of the Perkins patent, and substantially all those of the animal glue for veneering work.

Q. Did you test the defendant's glue for strength on wood joints?

A. I did.

Q. What did you find?

A. About two thousand pounds per square inch or about twice the minimum required and about a third more than the ordinary safe requirement for veneering glue.

Q. You stated, I believe that the Defendant's method of making glue out of starch including the putting in of the

[fol. 34] caustic and the heating up and stirring involved fifty-five minutes. Will you please state whether during that time in your opinion any degeneration of the starch occurred in the actual mixing up and making of the glue?

A. I think some slight degeneration occurred in that way, in the mixer after the caustic was all added, the action of the caustic in such concentrated solutions is relatively slow, but during that period I have every reason from my experience to think that some additional degeneration occurred. The base examined as such before mixture was as I said a high viscosity case, it was verging toward the upper limits of the preferred description in the Perkins patent in suit. It was within that range but I think in the practice of mixing up in the factory the prolonged stirring subsequent and application of heat subsequent to the addition of caustic brought it even further within that range effectually.

Q. What can you say as to whether the base before it was made into glue was degenerated as compared with the old high viscosity Cassava starches commonly on the market at the time of the Perkins patent, and previously?

A. It was so degenerated.

Mr. Wiles: I object to that. There is an implication about the state of market that is not in the record so far as I know. Somebody ought to testify about it who knows about it.

The Court: I think you may answer.

A. It was degenerated.

Q. Can you state by what means and method it was degenerated?

A. I can't. I have no means of being certain whether a chemical process was applied to it or it came into the degenerated condition owing to some condition of treatment during separation from the plant, or owing to the cultivated condition of the plant; as compared with what the Perkins patent regards as raw material, raw starch, it was certainly degenerated.

Q. How did the defendant's glue which they made up from this base compare with the glue made from International Process Co. base by the West Michigan Furniture

Co. and Hood and Wright, which you testified about in the cases against them?

A. The glue was substantially the same.

Q. Was the defendant, Holland Furniture Co.'s glue a glue comprising a carbohydrate and rendered semi-fluid by digestion?

A. It was.

Q. How much water did you say you found the Defend-
[fol. 35] ant's were using in making their glue from this Cassava in the factory?

A. About two and one-quarter parts of water to one of glue base.

Q. That is by weight?

A. By weight.

Q. What chemical did you find they were using to dissolve the starch with this less than three parts of water for making glue?

A. Caustic soda.

Q. Did the Defendant's glue contain amylaceous material as a base?

A. It did, the Cassava is amylaceous material.

Q. Was the defendant's amylaceous material dissolved without acid?

A. It was.

Q. Was the glue they produced viscous semi-fluid and unjellified?

A. It was.

Q. Was a material portion of the starch base which the defendants used to make the glue insolluble in water before it was dissolved in caustic?

A. It was.

Q. Was the caustic the Defendants used a solvent of cellulosis?

A. It was.

Q. Was the glue produced by this process of the Defendant a glue having an adhesive power substantially as good as that of animal glue?

A. It was.

Q. In making this glue did the Defendant suspend the glue base of amylaceous material insolluble in water in three parts or less by weight of water?

A. They did, it was between two and three, approximately two and a quarter.

Q. Did the defendant then treat it with alkali, properly proportioned to produce a glue having lasting viscosity to flow through pipes?

A. Yes, it did.

Q. In the preparation or selection of the defendant's glue base, as carried on by the International Process Co., and the Kane Co., so far as you know, is that the full technical and Industrial equivalent of the process of preparation or the first step of the patent in suit?

A. Substantially so, yes.

Q. Is the glue base so prepared or selected by the International Process Co. and the Kane Mfg. Co., and delivered to the defendant, the full technical and industrial equivalent [fol. 36] of the glue base of the patent in suit?

A. It is substantially.

Q. Is the final glue made by the defendant's the same actual and industrial technical product as the final glue of the patent in suit?

A. It is.

Q. I now show you a copy of Perkins patent 1,109,144, relating to a glue kettle, and ask you whether that glue kettle apparatus shown in that patent is typical of glue kettle apparatus used in the art for mixing this vegetable glue?

A. Yes.

Mr. Crosby: I offer in evidence copy of this patent, merely as showing the type of apparatus which is typical of the glue mixing apparatus used for mixing the glue.

Paper referred to marked Exhibit 23.

Q. I show you a copy of Perkins patent 1,238,810, relating to glue spread and ask you whether the spreading apparatus therein shown is typical of the spreading apparatus commonly used in the art for spreading this vegetable glue?

A. In a general way, yes.

Mr. Crosby: I offer in evidence copy of patent merely as illustrating a glue spreading apparatus, typical of spreading apparatus used for spreading this vegetable glue.

Paper referred to marked Exhibit 24.

Cross-examination by Mr. Wiles:

Q. Doctor Grosvenor, you made some general remark about this boil up test. I didn't understand whether you meant to say that the sample which you took met that test as given in he patent, or did not meet it?

A. The sample of the Kane glue obtained at the Holland Furniture Co. plant, did not fall within that test. As I explained one doesn't expect the glue base to fall within that test unless it is a base which has been acid processed, from high viscosity raw Cassava.

Q. When you were at the Holland Plant there were two different samples of Kane Co. glue being used were there not?

A. I understood that there were, yes.

Q. And you took samples of each?

A. I did.

Q. One of them was the one in regular operation and the other was experimental as you understood?

A. That was my understanding of it.

[fol. 37] Q. Did you make like tests with the one that was experimental?

A. I did not regard the experimental glue as having anything to do with the case, and examined so far as I did examine it purely for information.

Q. You did examine it, did you?

A. To some extent, without any very great care.

Q. Did you make a glue out of that base?

A. No, I did not.

Q. Did you see glue in the Holland factory made of that base?

A. I did, which purported to be—have been made from that base.

Q. What was the appearance of that glue with reference to the glue which you did take the sample of which you have been testifying about?

A. It differed materially. I regarded it as rather unsatisfactory from its appearance. Without going into the more exhaustive tests I wouldn't be positive, but I didn't like the look of it.

Q. If you were asked the same series of questions comparing that glue with the glue of the patent which Mr.

Crosby asked you about the glue you did take the sample of, how would you answer it, affirmatively or negatively?

Mr. Crosby: I don't know what bearing it has. It seems wholly immaterial to go into this experimental test never used except as an experiment.

The Court: I think you may answer.

Last question read.

A. I think I would decline to answer without knowing more about it until I gave the time to determine about that glue. When I brought the sample back I was told that it was not material, I didn't go into it the same way I would want to go into a glue before answering those questions positively.

Q. How did the fluidity of the glue they had made experimentally there compare with the fluidity of the glue which you have testified had the same fluidity as the patent, the patented glue?

A. Without testing accurately, I should say from mere observation that it was considerably less—greater fluidity, less viscosity.

Q. So in that respect that glue was closer to the patent than the glue you did take a sample of?

A. Was closer to the patent?

Q. Had a great fluidity?

A. You are talking about a finished glue and I haven't [fol. 38] testified that the finished glue observed at the Holland plant differed from the glue of the patent in this viscosity. I said that the base as examined by the nine to one boil up test which is made with water and not with caustic soda, and a test which is not intended to apply broadly to glues or even to glue bases would be different, but I did't say that the glue was different.

Q. You were asked in the question to which I interposed an objection and which was overruled, a question which implied something about the type of starches which were available on the market at the time Mr. Perkins made his invention.

Mr. Crosby: I said, at the time the patent issued.

Q. At the time the patent issued, were you familiar, with the market conditions of the starches then upon the market?

A. If you mean by market conditions in the buyers and sellers sense, I was not, but if you mean the market conditions in the sense of those high viscosity starches, which could be purchased and were purchased for making glue, I was familiar with them.

Q. You were familiar with the Cassava starches of various grades whether sold for glue or for food or for other purposes which were available?

A. To some extent, relatively very little outside of the glue field.

Q. Are the same grades of Cassava starch available today that were then available?

A. They are not, if you mean by grade the quality of starch. If by grades you mean a name, a brand under which the thing is sold, many of the same brands are still available but the records show that the viscosity of the starch, the body of it as it is called in the trade, has fallen off very materially.

Q. When did this drop in grade or body begin?

A. I think it would be difficulty to say precisely when such a gradual movement of averages began. But I should say that it was somewhere in the vicinity of 1912, with some brands, 1913 with others, it varied according to the brand.

Q. And that has been gradually going down ever since has it?

A. With some interruptions, and some recoils. Some of the brands have apparently recovered temporarily and we are hoping that some of them may recover permanently.

Q. By recovery you mean to get back to the old high [fol. 39] viscosity which you say has vanished or has decreased?

A. I do.

Q. You say the records show, just what records do you mean, doctor?

A. I mean my own viscosity records that have been kept at the factory from practically every car lot that comes in confirmed by my own laboratory viscosities taken in New York where I had occasion to question the other results.

Q. It is possible to buy on the market today the same high grades that were then available if you wanted to get them?

A. I think perhaps occasionall in small lots. I doubt whether a very large requirement of that material could be purchased. I think hardly, not the requirements that are necessary for the vegetable glue business today.

Q. How much difference has occurred? Is there any standard by which you can describe just how much this viscosity is changed?

A. Yes, we could perhaps describe it in terms of the test that was regularly used in the factory, substantially the 20 to 1 boil up test so called has been described from time to time in connection with these litigations. If you mean a more general way than that without going into detail, I think the viscosity has fallen for those high grade starches anywhere from thirty to 60 per cent averaging perhaps about 40 to 50 per cent.

Q. The fact is today, is it not, that if you take any starch available—any Cassava Starch available on the market, no matter how high its grade may be, any one that can be purchased, it makes a perfectly satisfactory glue, doesn't it?

A. I think it can be made to make a perfectly satisfactory glue—If the process of solution is modified to—the process of putting it into solution in the caustic soda is modified to adapt itself to that class of material. In other words, if a little of the degeneration is carried on the mixing operation.

Q. Following precisely the process which you saw the defendant following at Holland with the Kane product, that process will work perfectly satisfactory with any starch, any Cassava starch now on the market no matter how viscous or how little degenerated won't it?

A. I haven't tried it, but I doubt it.

Q. With what grade would you pick out that is open and available on the market today with which you think the Defendant's process as you observe would not be satisfactory?

[fol. 40] A. There is probably not all of any one brand, because each brand varies from car lot to car lot very considerably, frequently varies as much as two to one or even three to one, that is one car may show an average viscosity three times as high as another car of the same brand, but I think that I have seen in the last year carloads of—that

is samples from carloads—of several brands, that with the mixture made as it was made at Holland, would not give satisfactory glue.

Q. What brands have you in mind?

A. I think of some Gallahan some if I remember right, there were M-4, a little of which is coming back on the market I think one or two cars of Royal.

Q. How many kinds of Royal are there?

A. Why, I don't pretend to know. A good many things are probably sold as Royal that have little reason to be so called. I suspect that from the way the starches behave.

Q. Royal is a trademark of one concern here in this country, isn't it?

A. That is my understanding of it. I don't pretend to know it from the commercial side.

Q. You understand that that is a Stein-Hall product, that Royal is a Stein-Hall trade mark for a particular grade.

A. I am not sure whether it is trade mark for a particular grade or whether it is the trade mark for a particular make of starch.

Q. When you say some car loads of Royal cannot be used do you mean that some can?

A. I think so. Perhaps I should say could be used if they were handled the same way, and were what might be called over treated in the kettle.

Q. Within the range of water up to three parts it is feasible to use today any Cassava starch on the market isn't it for the making of a satisfactory glue?

A. I am not altogether prepared to answer that. I should say that depended some on the type of work that was to be done. If you mean for high grade five ply work, I should say that three parts of water in itself would be rather objectionable.

Q. What I was getting at was this, you say that with the exception of perhaps these two grades, the exact process used by the defendant would use practically the grades on the market, if you have the additional leeway two and a quarter to three parts of water you can use any starch on the market following otherwise the defendant's process?

[fol. 41] A. Not having tried it, I can't say.

Q. What is your opinion about it?

A. For certain classes of work I should say probably.

Q. It will make a wood glue which will have the strength of animal glue?

A. I wouldn't like to prophesy about the strength, not having tried it.

Q. Will it flow through pipes?

A. Oh, it can be made to flow.

Q. And it will go on to machines?

A. I think so.

Q. It will have all the other characteristics named in this patent?

A. Except the proportioning of the viscosity, and the cohesion, and its tack and hairing qualities, how far those will be modified I don't know.

Q. Royal, of which you have testified, is generally considered the highest grade, that is, having the highest viscosity of all the starches on the market, isn't it?

A. I think that is a matter of opinion, some experts don't regard it that.

Q. What type of starch in your experience will have any higher viscosity than Royal has?

A. On the average, that is, if you take the average of all purchases and of course, my acquaintance with these starches is largely limited by the purchases made for the Perkins Company, I don't know that there is any other that will average higher, but we are not very heavy buyers, that is the Perkins Glue Company is not a very heavy buyer of Royal. I am not perhaps well qualified to speak of that.

Q. So that if you were trying to find a starch on the market that was less degenerated than the starch of the Perkins patent, if you couldn't find it in Royal, you wouldn't know where you could find it would you?

A. Do you mean the raw starch of the Perkins patent?

Q. No, the glue base.

A. Oh, I think I would know where to find it. I think there would be a number of brands that would offer me carloads that were less degenerated than the preferred glue base. I would have difficulty perhaps in locating them.

Q. You have drawn a distinction between the preferred glue base and the glue base—I assume that there is some glue base that is the glue base of the Perkins patent, meaning that will cover the various glue bases of that patent?

And that that base has to have some sort of a degree of de- [fol. 42] generation. What I want to find out from you is, is there any starch available that is less degenerated than that, if so where is it, so you can go find it?

A. That involves placing an extreme limitation on what might be regarded as the limiting base of the patent in suit. I don't regard that as being my function. I can say this much, however, that I believe there are samples of Gallahan, XXX available, and I have samples of C. J. E. C. and several other brands, just how old they are I don't remember, whether they are on the market today I can't say, because I haven't investigated, that are outside the limits within which any base so far found by me, and actually used for glue, for making glue, have all fallen, and those are the preferred limits given in the patent in suit. I haven't attempted to determine in my own mind how far those limits would be extended by what I have always regarded as the critical test given in the patents in suit, the test of whether when made up with between two and three parts of water the base would make a glue having properties of Perkins Glue, that distinction between that and the 170 degrees boil up test—170 degrees hot water test—has never been necessary because the bases I have met have all fallen within that 170 degree test.

Q. What I am really trying to find out from you is whether this so-called term Perkins Glue base, covers all the starches there are, or whether there is some place where the art can take a starch and say, that is not the Perkins glue base, and then go ahead and do what he pleases with it?

A. I have certainly met a number of starches that I know do not fall within those preferred limits. I am not stating whether the use of those would necessarily infringe the patent or not, I don't think that is my province.

Q. You have taken it upon yourself to state, not that it would infringe but that certain things were plain and obvious and mechanically equivalent. Now I will ask you what if any starch there is available Cassava Starch of course, which is not, in your judgment a plain and obvious mechanical equivalent of the glue base of the Perkins patent.

Mr. Crosby: This is wholly irrelevant. There is no question of infringement here.

The Court: I doubt if it is within the range of the direct examination.

Mr. Wiles: I think he laid himself wide open to it by discussing the market and the difference in degeneration today. On that line I think it is plainly competent.

[fol. 43] The Court: No, I don't think that. I think you are outside of the range of the direct examination. In other words I don't think this cross examination is germane, to the direct, if that is the objection that is made as I understand it is. The objection will be sustained.

Mr. Wiles: Does the record carry exceptions without noting them?

The Court: It does not.

Mr. Wiles: An exception noted.

Q. When you examined the sample of the Kane base which you took and which is the one concerning which you have testified, how did you find that compared with the regular Cassava starches now on the market?

A. Compared with them in what sense?

Q. Well, in quality? As you have spoken of it, that is to say, I understand quality of the Cassava starches measured by viscosity in solution is it not?

A. Among other things, yes.

Q. Of what grade should you suppose this base was which you took from the defendant's?

Mr. Crosby: You mean as to viscosity or color or whiteness?

Mr. Wiles: As to viscosity, what type of market starch is that as far as you can tell?

A. It is what would be for the conditions as I find them today a fairly high viscosity starch.

Q. Of the grade above Royal?

A. Within the range of the Royal grades.

Q. And so far as you are aware, there isn't any starch regularly sold and available with any higher viscosity than this sample which you took?

A. That was not my—not what I said. I said, I thought there were others.

Q. I understood you to say there were others as good, but you knew of none higher?

A. Than some of the samples of Royal? I have found other starches the viscosities of which were higher than this particular sample.

Q. What I meant was this: if you wanted to get a starch of higher viscosity than the sample you took from the Defendant, wanted to buy it right along, under a market brand, you wouldn't know where to get it except by ordering Royal or starches of like grade?

A. I would have to take some cars of a starch of like high grade with Royal, but I think there would be higher grade cars considerably than this particular one. That has been my observation.

Mr. Wiles: That is all.

[fol. 44] TESTIMONY OF ALEXANDER N. GROSSMAN, A WITNESS CALLED ON BEHALF OF DEFENDANT AT THE TRIAL JUNE 27, 1921

The witness testifies that he is 29 years old, a Chemical Engineer in the employ of the Kane Manufacturing Company of Chicago, Ill., of which Thomas B. Kane is President and has been employed by that Company since 1918. The Thomas B. Kane referred to was a defendant in suit of the Perkins Glue Company against the Solva Waterproof Glue Company and others in the Seventh Circuit. The business of the Kane Manufacturing Company is one of starch and starch products manufacturing vegetable glue and sizing materials; the sizing materials are for paper mills and for factories manufacturing fibre furniture. The sizing material for the paper mills has a corn starch base, that for the fibre furniture has a cassava base. The base for fibre furniture for sizing purposes is identical with the base which the Company sells for vegetable glue.

Asked how the base is treated in order to get it into condition for use for sizing, the witness states that it is the same treatment which we give vegetable glue. But when it reaches the factory where it is used as sizing, it is dissolved in between 16 and 20 parts of water and when

warmed slightly, 3%—up to 3% caustic soda by weight to the dry glue, is used in breaking it down; it is broken down until it flows readily and is ready for dipping of the chairs. The chairs are dipped in large tanks of this solution. The witness further testified that they have furnished glue material to the Holland Furniture Company, the defendant in the suit. Asked to the nature of this glue material the witness replies: Pure cassava flour, pure in the sense that it has no adulteration or mixture of other starches. Asked what kind of cassava flour it is, the witness states: G. T. A. brand and sometimes G. T. G., which is identical with G. T. A. Asked as to other brands, the witness states that for special purposes they have been testing and using lately Royal brand, which is the heaviest cassava starch on the market today. They have furnished the Royal brand to the Holland Furniture Company, the witness was present when it was tested out and believes Dr. Grosvenor was there the same day. Asked as to the result of the test, the witness states: The bundles were opened up the next morning and were found highly satisfactory. The bundles of veneer referred to comprise probably forty veneers to a bundle, and are put under pressure, [fol. 45] and next morning they were released from their clamps. They were used in regular manufacturing of furniture by the Holland Furniture Company. As to the length of time the Kane Manufacturing Company had been selling the Holland Furniture Company vegetable glue, the witness testifies he has no specific record on hand, he believes it started after the War—Armistice; is not certain as to the dates or anywhere near the exact date. Asked whether the vegetable glue base that was furnished the Holland Furniture Company had been subjected to any treatment of any kind in their plant, he replied: The only treatment we give it in our plant is a sieving process to remove impurities such as lint, sticks, sometimes we find a few bolts and other foreign matter which when mixed with glue would probably help raise the veneer, when the veneer was laid; it receives no chemical treatment of any sort. It just goes through our sieves and falls into a hopper and is rebagged. Asked by the Court whether he meant the original cas-ava flour is simply sieved and then rebagged, the witness replied: Yes, sir. In reply to the Court's question: No process of degen-

eration at all? the witness said: No process at all; the bags arrive in our factory say on the second floor and are carried by the bucket conveyors to the centrifugal reel, say on the fourth floor, and there the impurities, as lint, wood, sticks, bolts and any other foreign lumps which might occur by weighing of the bags on the boats are removed and the pure material falls through the sieves, falls into a hopper, is sewed, rebagged and shipped out in that way. There is no treatment other than that. They get the starch from a number of sources, originally it comes from the Java Islands. Asked to state in a general way from what sources they get the starch, from whom they purchase it, the witness replies: We buy a certain amount of raw material from Stein-Hall Manufacturing Company, Chicago; from Stein-Hall & Company at New York; Rutger, Bleaker & Company who are New York brokers. We have in the past bought some from Cafetea Importing Company, the Hartman Pacific Company, J. Aaron & Company, and any number of importers. These are all importers and not manufacturers in the sense of the word. Asked whether he knows whether or not the starch is submitted by them to any chemical or similar process, the witness states that his understanding and study of literature has shown him that the root is ground up in Java and merely goes through a washing process; the more washings and settlings which the starch receives there, the higher will be the grade of [fol. 46] cassava starch. The ultimate final washing would bring starch up to Royal by removing all impurities. Asked whether by the higher the grade you mean the more viscous the witness replied: The more viscous the material. Asked whether these importers, Stein-Hall or the others mentioned, give the starch any treatment before sending it to Kane Manufacturing Company, the witness replies that the goods arrive in New York at dock, and is immediately reloaded from dock by lighter to the railroad cars and to our factory. We have traced the cars at all times. Asked as to the significance of the letters G. T. A., Royal and G. T. G., the witness states they are the particular brands of certain manufacturers in Java. "Royal" is the trade name of Stein-Hall & Company for a very high viscosity pure food cassava flour, supposed to be, and I claim it is the best

Royal tapioca on the market. "G. T. A." and "G. T. G." are the products of two of our mills in Java, I know that G. T. G. stands for the name Goenting who is a manufacturer in Java. I haven't received the name of the manufacturer of G. T. A. There are so many I could not keep track of them. As to his experience with reference to the uniformity of material of these various products, the witness states: If you buy a particular grade of cassava flour, for instance G. T. A. from a reliable source, you obtain G. T. A. tapioca flour, and the uniformity is without question. The life of our business depends upon the uniformity of the raw material, and we have no complaints from the factories about the uniformity and therefore we know the product is right. The Kane Manufacturing Company makes tests to verify the fact that the product is uniform and has made only one rejection in the last three years. That was on some material which came from the Pacific Coast, probably had been in warehouse so long that it had deteriorated and we rejected it.

The witness further states: I have been Chemist for Kane Manufacturing Company since its organization in 1918. I was graduated from College, my first position was with the Solva Waterproof Glue Company in 1915. I followed that through, except for a short time I went down East with one of the officers of the old Solva Company to engage in another industry, but came back about ten months later to the vegetable glue. I will say that during the time I was in New York I continued my researches of vegetable glue. I have been continuously in this vegetable glue industry since 1915 and the testimony which I have given covers the [fol. 47] entire period since 1915. Besides the experiment with Royal starch which I have described, at the Holland Furniture Company, we shipped a thousand pounds to one of our customers in Indiana who used it in various preparations, and found it highly satisfactory. I was present too. The final say-so was with the gentlman who was running the plant. As to the proportions of starch to water used, I gave the instructions as to how the material should be used for each particular case. I was there during the entire time; but the real dirty work of shoveling in the starch and the like, I told the employes to do, under my instructions. I was there when the glue was used the next day when the

bundles were opened and also during the week it went through the mill, it had its regular period of drying, air dried on sticks, and then went through the sanders, and was built up, was passed as satisfactory by the Superintendent. It was built up into furniture. As to the proportions of water and glue material used there, we started with 2¾ parts of water and then the next batch we raised it to 3 parts of water, and then 3¼ and 3½ parts of water, and we got satisfactory results at 3½ parts of water to the dry base. 2¾ parts of water were still more satisfactory. Of course 2¾ it was fairly heavy but workable. It flowed through the tubes and was applied by the usual methods throughout. I have had experience in using the glue of the Kane Manufacturing Company made from G. T. A. or G. T. A. in Perkins Glue machinery. I had an experience along those lines just about two weeks ago in Jamestown, New York. I tested a sample of our glue in a Perkins Kettle and proceeded in the usual method which we employ where our machinery is installed forgetting for the time, probably on account of the heat, for the Perkins agitator was only one-half an agitator with no bottom scraper. We put the water into the kettle, and then poured in seventy-five pounds of our glue base slowly and agitated and then warmed the solution slightly and added our caustic soda which is the general procedure with our machines and our own glue. When a batch was cooking I noticed throughout lumpy, in other words, that the glue had come across in transparent visc*u*ous solution. There were white clots of undissolved glue base. I immediately condemned the batch, told the Superintendent of the plant that I could not run a test with that batch because it was spoiled. I got another one of our customers in that City to rush over a bag and I modified the treatment but it took—where it takes normally [fol. 48] a half an hour to make a batch, it took an hour and a half by this modified treatment in the Perkins converter.

Asked by the Court just what does that indicate to you, the witness states: It shows that the method employed in cooking up our glue which is a more viscous material, must be altered from the method employed by the Perkins Glue Company in cooking up their glue. In order to overcome these difficulties we designed different types of glue mixers which have bottom and side scrapers. Our stuff is heavier,

and the heavier the glue base from a business standpoint of viscosity, the quicker it drops to the bottom of the kettle, before it is cooked up. We put in bottom scrapers and side scrapers and then made the kettle doubly agitated, in other words one set of agitators going in one direction, another set were going in the other opposite direction, because in a Perkins converter, our glue would just swing along on one agitator; in short, to overcome that we had to throw in another set and break it up. Asked whether he attributes this to the fact that they are using substantially undegenerated starch—raw starch, the witness states: "No I can select the raw material to get a glue base that will act just like Perkins glue base or even act on less water than Perkins glue base, by taking the proper amount of water, the proper amount of caustic, I can make any glue from any cassava glue base. In reply to the Court's observation that that is what was done in the International Process Company practically as I remember, the witness states: They used other materials besides the pure cassava which are detrimental to a high-grade glue. In reply to the Court's observation that they obtained their degeneration by mixing, the witness states: Yes, we have no degeneration in our process whatever. Asked by the Court whether it was witness' understanding that there is no degeneration or that the degeneration takes place during the process, witness states: There is no degeneration at all. The small amount of degeneration which Dr. Grosvenor spoke of in his testimony which *he* goes on in a kettle is proportionately the same for any glue base, the action of caustic soda tends to break down the starch, but the degeneration which does take place is negligible.

The Court asked, if I understand you rightly the base employed by your concern is not degenerated starch?

The witness replied: It is not.

The Court: At any stage?

The Witness: It is not.

[fol. 49] On cross-examination by Mr. Crosby.

As to his statement as to the cassava which was sold for sizing fibre furniture by dipping the fibre furniture into a glue containing 16 or 18 parts of water, this was not a veneering proposition, but a sizing proposition. Fibre furni-

ture is made from twisted paper. You take a heavy grade of wrapping paper, cut into ribbons about an inch and a half wide and mechanically twist it to resemble reed, it is then woven round a chair and when ready to be finished into a final chair is dipped to fill the pores of the paper first, and hold up the finish such as varnish and stain. As to the Royal cassava being of higher viscosity and heavier body than G. T. A. and G. T. G., it is the next family to it. The Royals are the highest, and G. T.s are the next family to it. As to the test at the Holland Furniture Company factory with Royal, another representative of the company and myself were there the next morning when the bundles of veneer were taken down. I stayed at the factory the entire morning. I think it was on Tuesday morning, the entire next morning. They next told me, no necessity for waiting around for that because their plant was running very low. This was in January, I believe, and I called the manager of the company on long distance phone from Chicago to get his final verdict. The final verdict was on the word of Mr. Stephan, the manager of the company who, together with the superintendent watched it go through the process. I will say that in the morning when the bundles were opened you couldn't tear apart your veneer. I didn't examine them a week or two weeks later or anything like that; it wasn't necessary. They did that. My testimony in regard to the final verdict whether they were satisfactory was based on Mr. Stephan's information given to me.

As to the so-called Royal Cassava dropping in viscosity since 1912 or 1913, I do not know that. I was not familiar with the viscosity or extent of degeneration of Royal in 1912 or 1913, but only since 1915. As to the effect of fermentation on cassava starch in Java or enroute to this country or in the warehouse, there should be and I believe there is no fermentation after the starch is manufactured, after it is cut up from the root. As to fermentation taking place in the root, if it did it would be only natural because there is no root which doesn't grow without a slight amount of degeneration. As to whether the amount of degeneration which takes place in a root varies according to [fol. 50] climatic conditions and other conditions, I couldn't say—I haven't studied botany. As to Cassava

starches coming on the market during the last six years with very much lower viscosity than they were before, it is not true according to my method of determination. My method is to take a specific amount of starch, put it in suspension with a certain amount of water, and after stirring it vigorously to add a certain amount of caustic soda which is allowed to act upon each sample for the requisite amount of time, and the viscosity is then taken through a tube which will contain a hundred c/c/ of the solution. The time is recorded in seconds by stop watch, and if the various samples are tested in successive order as to having been made up they will record the exact viscosity of that particular starch. It is a comparative test. I never tested cassava starches prior to 1915 except in my college course. We didn't test, in a sense, cassava starch there; we tested various starches as they were on the market, in our course. I believe there was cassava in our course, cassava, potato, corn, and various others. I couldn't say off-hand what the results were on cassava starches as it is quite some time. As to making any test at that time to be comparative with the present day tests, the test itself was almost identical because we were taught that the method of determination of the viscosity of starch should be tested in its common form by caustic soda solution, and a cold solution. As to testing with the same identical instrument, the instrument was almost identical; it is an instrument which has a small aperture through which the starch will flow. Of course, in college we used a very accurate instrument called Saybolt viscosimeter. We do not use the Saybolt Viscosimeter in the present day tests. As to the readings on the tubes being comparative, they certainly are. If you take the ratio of the length of time between which a starch solution will flow through this aperture, a certain amount of starch solution, and compare it to the length of time it would take water to go through that same aperture, you would get a comparative test of the two instruments. As to making a comparison to find out what readings on one corresponded to the readings on the other, I have in my time tested out on the Saybolt. As to comparing the viscosity tests made in recent years on cassava starches with the viscosity made in college days on cassava, the work I have done of late is much more accurate, and I

paid more attention to it, than when I went to college. It didn't mean so much when I went to school. As to checking up the relative viscosities of tests made in recent years with [fol. 51] the tests on cassava made in college, I never saved my college records. My college course was a pure chemical engineering and starch was just one particular branch of it. As to different brands of cassava starch which I have tested since 1915, I should say that I have tested most all of the more common brands which come upon the market, and any number of new ones. Naming them, starting with the lower grades, I would say the G. S. brand, the T. B. brand, then come into the low mediums which are K. T. H., K. T. K. K. K., K. K. K., then go into the high mediums, which are G. T. G., G. T. A., G. A., Bandthong A; then go into the Royal and equal to Royal which are Dalima, Ikan, Krebek, Imperial, and Gallahan XXX. Probably many others, I could go down a list, there are so many you can't remember them all; every mill there has its own brands marked. As to testing each of these brands as they are coming over in a number of years, as the brokers would submit samples we always test them out to see whether the qualities are identical with what they were in the past, or whether they have increased in quality or decreased in quality. As to each brand always showing the same viscosity, it does very closely. I can't say very well what the viscosity of any of these brands were prior to 1915. As to whether the cassava starch which the Kane Manufacturing Company have been putting on the market and such sold the defendant, was degenerated in any way by fermentation or natural process before it reached this country, I do not believe it was. The ground for that belief is that the microscopic examination shows the granules to be in perfect condition. If they were fermented, if the starch had been slightly fermented we would be able to show it by the broken edge of the granule, every sample which I received before being tested for viscosity is examined carefully under the microscope. As to starch degenerated by chemical treatment showing substantially the same general form and size of particle under the microscope as before being so degenerated, if you get sufficient high power on your microscope you can see it. A more common example I could cite is corn starch, if you take ordinarily what we call raw corn

which is a thick boiling, and compare it with a broken down corn starch you can see in the broken down starch that it has not the same general smoothness around the shape of the granule, it has little ridges being broken up and attacked by the chemicals. As to cassava starch which has been degenerated with certain alkalie for example, appearing substantially the same under the microscope after as [fol. 52] before the degeneration, it depends on how far the degeneration went, if it hadn't been degenerated sufficient to attack the granule it wouldn't show under the microscope.

Asked by the Court whether there would be any degeneration then, the witness states: Well, I will tell you, it would be very hard to say. Some of the chemical might seep through that outer layer and attack the inner layer, you can absorb a certain amount of chemical through the outer layer and into the inner layer as you will with water. Water will attack any starch granule and swell it sufficient that it will burst the outer layer, it will attack the inner layer, first, swell it. There might be a certain amount of degeneration occur in these starches without changing the form or appearance of the granules. The only operation which the Kane Manufacturing Company performed on a starch base was a sieving operation, something of that sort. It was not carried out in a wet way. The goods are received in our building on the second floor from the railroad car; we have an automatic shaker which feeds the material on to a bucket elevator; it carries it in a dry form to the 4th floor and discharges it into a centrifugal reel, which is a reel about two and a half feet in diameter and about 10 feet long. The starch comes in on the inside of this reel, which on the outside has a wire mesh sieve, about 40 mesh sieve; the starch which is fine enough pases through the sieve and drops down and is carried into a hopper, while the lumpy material, the sticks, any lint from the bags and the like, go to the extreme end and are discharged into another hopper and are thrown away; the goods dropped through the hopper in first-class condition are re-bagged and sewed.

As to the lot which the witness testified had deteriorated in the warehouse somewhere, upon the first examination of the bags our factory foreman called my attention to the

fact that the bags were lumpy and mouldy, had an odor to them, which immediately proved that the goods had been wetted in transit, and once starch is wetted and has nothing along to stop the bacterial action there will be growth occurring; by the time the goods arrived at our plant there was a stench in some of the bags, and we do not want any material which after it has been cooked up will give off odors and sour, so we immediately call our broker's attention to it and we rejected the lot. I may have tested that for viscosity in the usual way, I don't remember offhand. I wasn't interested because the goods were not up to the standard specification before getting that far. [fol. 53] Whether the viscosity would be very low on such material, I wouldn't be able to state. As to the bacterial action reducing the viscosity of the starch, it might, I don't know. I have never tested it. As to whether bacterial action on the starch in Java before it was perhaps finally purified for shipment, affect the viscosity or degeneration of the starch, it might. It would certainly affect the quality of the goods arriving in this country. As to whether it is possible that after a certain amount of such bacterial action to wash the starch and free it and stop the action, in that case we would propably find the starch had a reaction. They would have to purify the starch further by chemical treatment, we know our starch is absolutely neutral, it can be used for pure food purposes. As to whether that neutralization might have occurred in Java, I don't think so. It is not a case of don't know, I do know that they have no chemical methods there to warrant saying that they could do it. As to whether some of the factories there use caustic soda in separating out the starch from the roots to aid in the separation, my knowledge shows that it is a pure washing process. If the material is graded, if the roots are graded they merely wash and rewash to a final product. As to their frequently adding very small amounts of chemicals to aid in that washing, I couldn't vouch for that.

Asked whether it wouldn't be true that if they did use such small amounts of chemicals, it might have a certain amount of degenerating action on the starch, the witness states that there would be no more than in the ordinary course of any starch manufactured, for example, corn starch which is naturally treated to break open the corn,

still we call that raw corn starch compared to any of the thin boilings which are made by degeneration processes. Asked whether the chemicals used in the washing out have any degenerative action on the starch, the witness replied, not sufficient to warrant calling attention to it. As to whether that depends upon the amount of chemical put in and the time, and temperature, it would depend on many factors. In speaking of the test which I applied to all the starches which my company bought to test them as to uniformity, I refer to the viscosity test by mixing up starch with water and caustic soda and allowing to flow through the small opening. It is necessary to perform such tests to check up and see whether we are receiving the product from one mill, or whether the broker, in order to take our order, has gone out and bought materials from different places and probably thrown together a car. You might find [fol. 54] the goods re-branded, we often have heard of re-branding raw material, for instance, when you buy a trade name, starch for instance, if I were to put an order in for two cars of Royal Tapioca and my broker couldn't get me Royal, he would take a Krebek and put the stamp across, Royal, make me believe it was Royal; we take it to prove that we are purchasing just what we have ordered. As to Royal, I have used it myself in two plants—the Holland Furniture Co. and the Showers Brothers Company at Bloomington, Indiana. I used it in the month of January, I believe Dr. Grosvenor took the samples the same day I ran a test there. As to whether that was the only time I used it in the defendant company's plant, having been informed that it was satisfactory it wasn't necessary to make another test. Our company has shipped no more Royal since that time. We have been shipping them G. T. A. and G. T. G. Of this Royal we made up two particular lots of one thousand pounds each in Showers Brothers plant just after the Holland test, I believe. I would have to look up my records. I used the mixer with two sets of stirrers in mixing up with Royal cassava at the Holland Company plant, but there was a Francis convertor, I believe at Showers Bros. Company.

As to the Kane Manufacturing Company's glue base being demonstrated to their customers on the Perkins mixers, I couldn't vouch for that, most people have their own equip-

ment, where we make tests, except in certain instances where a man contemplates a change from the Perkins to the Kane base, he tries it out on a Perkins convertor. I wouldn't say this is true of the majority of cases where the Kane material has been used. It is true in some cases. As to whether material which the Kane Company has been shipping can be mixed on a Perkins mixer, well, not satisfactorily, because we always get into trouble, the Perkins kettle is conical at the bottom, and they have no means of scraping the material at the bottom, and when caustic soda is put in and sufficient agitation is not produced at the bottom, why, it balls it up and gums it along. I find it necessary sometimes to stop the machines before I put the caustic in, and put my hand way down in the Perkins convertor and sort of pull up the pieces. The process of pouring the caustic into the glue convertor and mixing up the glue with this Royal cassava takes the same period of time as our regular glue—about three or four minutes. We just make an aperture in the bottom of a pail, pouring it in, as the machine agitates it is carried along. Our glue is gen- [fol. 55] erally mixed by the aid of heat except where you have no heat in the plant, when you increase the quantity of caustic soda. As to how long after the caustic has been added stirring it in the heat is continued, it would depend upon the quality of the steam, if a plant used live steam taking a specific example of say 50 pound steam pressure, 50 to 100, a batch of 75 pounds of dry glue can be converted in less than half an hour, probably in some plants in less time than that, while if you are using exhaust steam a batch will take a considerably longer period of time. We continue agitation after the heat is turned off as well you understand. After we turned off the steam and put in cold water to cool the batch we continue agitation. As to whether we continue the heat for half an hour or more after the caustic is added, we continue to heat only until the starch is broken down and flows freely from the end of a stick placed into the kettle. If it breaks off we say it is not finished. This does not occur immediately after the caustic is added, it takes a period of time. As to how long, up to a half an hour, sometimes longer, depending upon the quality of the heat or the steam. It might take anywhere from fifteen minutes to a half hour, and if the steam is of a

lower quality, it will probably take three quarters of an hour. There is no specific time. That is gauged by the operator mixing the glue when he sees the glue has got into a sufficiently fluid condition, then he turns off the heat and turns on the cold water in order to cool the glue down. Then it is ready for use. I prefer for my own sake to continue stirring thereafter. As to whether it is true that more or less degeneration occurs in the starch after the caustic has been added in the mixing of the starch and during the heating, during the continued heating and stirring for fifteen minutes to a half hour, no more degeneration than would occur with the Perkins or any other base, in fact less because the raw material is harsher than a processed starch. Degeneration will be less marked on a starch of higher viscosity than one which has already been degenerated to some greater extent. I tell this by the treatment which I have given caustic soda, starch solutions with caustic soda in my laboratory. I find if I allow the Perkins glue base sample to rest over night in my viscosity test it becomes the same as water the next morning, while my own Kane glue base still retains its viscosity. Of course, it has worked down some but not in proportion to which the Perkins has dropped. It just goes to show the extremely marked action of the caustic soda on a degenerated starch [fol. 56] base, and one undegenerated. As to when I tested it in that way—as to the proportion of water to starch base—I used forty parts of water to the starch base. This was not for glue. You couldn't send the glue through a viscosity tube. If you were to put a hundred C. C. through an aperture so small as I have, a hundred C. C. might go through in about a week.

As to whether the test was of the degeneration which occurred in the glue itself, glue made up with water between two and three parts or was that of a mixture made up of forty parts of water to one of starch, this test was only for the purpose of determining the viscosity of the starch. As to the degeneration which may occur during the actual mixing up of the glue for factory use, and the degeneration which occurs during that period after the caustic has been added and while the stirring is continued with heat, in each case I might state that the glue—our glue base cooked up—and put in a spreading machine, is

heavier than the Perkins glue base, proving that there is less degeneration in a raw hard starch than one which has been treated and softened. As to whether the witness has measured the degeneration which occurs during the treatment with heat in the glue made up with Perkins glue base in the usual way, and the amount of caustic ordinarily in that glue for a half an hour or so after the caustic is added, I have not, except with the naked eye. I have done the same with glue made in the usual way with Kane base, in the same manner with the naked eye. As to whether I can swear positively of my own knowledge that there has been no degeneration in the cassava starches sold by the Kane Company as base for glue at any stage, that is in Java or elsewhere, or by any means such as natural causes or otherwise, to the best of my knowledge, I will.

On redirect examination by Mr. Macauley:

As to Kane Company's finished cooked up glue as compared in viscosity with the finished glue of Perkins, it is heavier for the same amounts of water added. The Kane Company has never sold to the Holland Furniture Company vegetable glue containing any corn or potato starch. As to why Kane Company continued to ship G. T. A. or G. T. G. to the Holland Furniture Company after the tests with Royal had proven satisfactory, market conditions were such that Royal was too expensive flour to use in competition with any other glue on the market.

[fol. 57] Testimony of Carl Beuch, a Witness Called on Behalf of Defendant, Given in Open Court, June 27, 1921.

The witness states that he is 26 years old, living at 1319 Farwell Ave., engaged in the selling of cassava flours and Far East products in which occupation he has been engaged for seven years. Five years of this time was spent with Rutger, Bleecker & Company, 87-89 Wall Street, New York City. At the present time the witness is in business for himself. The witness testifies that he is familiar with the grades of tapioca flour that they run from the low grades which is called the Meal and the low medium, high medium, right up to the high grade flour. The meal which

is practically the lowest grade of cassava flour imported, of that there are several marks, but I believe that the most prominent marks of the meals is T. B. and G. S. and Elephant. The best known marks of the low medium are K. T. H., K. T. K., KK and KKK. The letter K is an indication of low medium. The best known marks of high medium are the G. family, with G. T. G., G. T. A. and GA, Banthong A, and HH. The best known high grade marks are Royal, Ikan, Dalima, Krebek, Boemajoe, and Galaham XXX.

As to the witness' experience with reference to these different grades keeping up their quality or deteriorating during his experience, he states: I would say that there has not been any deterioration occurred that I know of, or if it had I believe that I would have heard of it throughout the trade, and various other sources.

On cross-examination by Mr. Crosby:

The witness states that he has been familiar with cassava starches about seven years, as far back as 1915 or a little longer. He first had to do with cassava starches in 1913 with Rutger Bleecker. When he first went with them his duties were to sample the flour for them and after that—about six months after that, he started selling cassava flour and has been selling it ever since. His duties in selling did not require him frequently to make viscosity tests of the different flours. He believes Rutger Bleecker & Company have sold cassava starches to Victor G. Bloede of Baltimore, and does not know that Mr. Bloede had found a great dropping off in the viscosity of the starches he was buying.

[fol. 58] Arthur Schepel, a witness called on behalf of defendant, testified in open Court on June 27, 1921, as follows:

That he is 44 years old, resides at Holland, Michigan, is veneering foreman for the Holland Furniture Company and has been veneering foreman for that company for four years and a half. He recalls Mr. Grossman coming to the Holland Furniture Company some time last January and making a test there.

As to the test, it was three and a half water to one glue. It was vegetable glue but the witness couldn't say what kind. About fifty pounds of flour were used and 175 pounds of water. After the glue was made it was used, the same as all other vegetable glue is used for making veneers. The witness judges about three bundles of veneers were made with it. As to what was done with those bundles of veneer after they were made, they were left in over night and taken out the next morning. The witness saw them the next morning. As to what he judged the character of the veneer was from what he saw, he was perfectly satisfied with it. As to what became of it, it was piled up on sticks and used into furniture. He never heard anything further about that particular veneer after it had been put in the furniture.

JOHN ERICKSON, a witness called on behalf of defendant, testified in open Court on June 27, 1921, as follows:

That he is 42 years old, lives at Holland, Michigan, and is superintendent of the Holland Furniture Company. He has been superintendent of that company since the first of January, 1921. He recalls Mr. Grossman of the Kane Manufacturing Company coming to the plant of the Holland Furniture Company in January of this year and making some experiments. Asked what he knows about those experiments, he testified, we know that we laid the veneer in our regular way, handled it the same as our regular veneer stock is handled and it went into the regular production. It went into furniture, it was just veneered in the regular way, regular stock. Just put into the regular stock. It was entirely satisfactory so far as he could ascertain.

[fol. 59] DR. GROSVENOR, recalled and examined by Mr. Crosby:

Q. Doctor, the defendants in this case have offered in evidence a copy of Brooks U. S. Patent 779583. Have you seen and read that patent?

A. I have.

Q. Doctor, have you tested the process described in that patent?

A. I have, repeatedly.

Q. Will you please compare the Brooks process with the process and product of the patent in suit?

A. The Brooks patent is for a process of making adhesives, and the choice of the word so far as it guides one at all indicates a sizing or finishing material rather than a strong glue; that is borne out throughout the specification by the little ear marks that show the thought in the mind of the writer, and also borne out wholly by the character of the material itself when produced. The specification is indefinite in several respects and describes several modifications, but after a number of trials and a careful study of the patent I have reached the conclusion that in its best form the process consists of the following steps: beginning on page 1 line 40 with his specific description 100 pounds of dry fecula, by which both from the French practice—and Fecula is originally a French word—and by experience with the patent I found meant particularly potato starch with one pound of persulphate of ammonia which is an oxidizing compound, and 15 pound of water. This mixture is a slightly damp material. Starch normally dry contains approximately 10 or 12 per cent of moisture. Adding 15 pounds of water doesn't make it any more than just thoroughly damp. It is not wet. It is not a starch milk or anything like that, just a moistened material, and that amount of moisture is added to distribute the reagent as equally as possible throughout the body of the starch without putting the starch into suspension. Two pounds of sulphuric acid are then added and stirred into the mixture and the heat of reaction of the sulphuric acid with the organic matter, with the persulphate of ammonium and its heat of dilution before it reacts raises with the water that is already in the starch raises the temperature to about 120 degrees Fahrenheit. The mixture is then agitated at this temperature to modify the fecula. The patent doesn't say specifically how long, but we will return to that question shortly. The modified fecula is then washed and as indicated over on the second page about line [fol. 60] five he likes to use a little borax to make sure of neutralizing the last traces of sulphuric acid that may be

left in the mixture, and the wet fecula—because it has now been washed and contains a good deal more water—the wet fecula is heated to 150 degrees or above, with only such water as remains after draining, together with such water as may necessarily be added with the borax. It is now wet because after washing it should be drained to remove the excess of water, and then the borax in order to distribute it thoroughly should be added in solution just as the ammonium (persulphate) was originally added. So wet it will quickly dissolve and present a very close resemblance in amber colored appearance and transparency to dissolved animal glue, and will be about the same density.

That description of washing, neutralizing, heating to about 150 degrees and the resulting effect, is found on page 1 line 65 to 70. That does not happen unless the amount of moisture I have indicated or slightly more is allowed to remain with the starch; so that I am forced not only from the general description but from the description of the result obtained to infer that he leaves the moisture in there. Furthermore, he says that it is afterwards dried. After being so dissolved the material may be removed to any suitable dryer and dried, but at a temperature not exceeding 250 degrees. That description occurs on page 2 lines 13 to 19; and he goes on to say, the resulting product will be in its amber colored appearance and transparency as also in its sizing and adhesive qualities, very much like animal glue.

It is well known that animal glue is used for sizing and for adhesive uses in finishing various materials, in sticking together clays, in book binding, wall sizing and a lot of work of that character quite distinct and apart from the use of the animal glue for veneering or furniture work. Brooks doesn't say as indicated above how long to modify. The first stage treatment was continued by me for various period- with a view of ascertaining what gave the effect which he described, and I found it to be about 20 to 30 minutes, generally, somewhere in between that. The starch was converted thereby practically to a soluble starch and dissolved by the acid present after its—that is the hot water and the acid present—after its conversion partly by the oxidizing action of the ammonium persulphate. The vi-

scosity or the degree of degeneration of the starch at this stage in Brooks process (what might be called one of the intermediate stages) is already, therefore, very much [fol. 61] greater than the preferred modification described by Perkins. Even assuming that the modification took place in the same direction, split up in the same way, it has in this case been carried very much further.

Brooks, as I said, does not indicate precisely what kind of starch he prefers to use, but after having tried it with corn, the commonest starch in this country, cassava and potato and in view of the fact that potato starch has for years had a more or less considerable vogue in textile work, I was led to favor the potato, in fact I found that was the only one of the three starches which gave quite the results described by Brooks.

I was therefore convinced, not merely from the use of his word fecula, from the fact that he wanted to prepare a sizing and adhesive material particularly, but also from the way in which the material reached when his specification was carried out with it, that he meant to use fecula in the more limited sense because loosely fecula is applied to almost any kind of starch.

Now, this bursted product after the treatment described in line 65 to 70, on drying, yields the final product of Brooks patent, that is, after cleaning up, washing and drying. The heating he says should not be carried above 250 degrees and I limited it to about 200 degrees because I wished to get as strong a product mechanically——

The Court: 200 degrees he says does he not?

A. 250 degrees I think, on page 2 line 15 at a temperature not exceeding 250 degrees Fahrenheit; I limited it to about 200 because it gave me stronger and better results so far as I could judge. I tried them both, and from this final product he makes the fluid size or adhesive. But this is what he was preparing the material for sale; this is his amylaceous glue or adhesive which is the immediate object of his patent. In testing that material to see what it would do, it was dissolved as a size would be dissolved and the wood blocks were thoroughly soaked into it until they had accumulated as much of it as they would take. The material was spread in films and dried to observe the character of the product produced on drying, and it was

put through the test which enabled us to judge to some extent whether a product will give a good glue, and in many instances, why, it will not give a good glue if it fails to do so. The block tests showed only about 663 pounds per square inch instead of a wood strength of a thousand pounds, and a preferable strength of about 1500 pounds. The films were extremely weak, they were difficult to pre- [fol. 62] pare, the material curled excessively and showed the characteristics of an over degenerated starch in its shrinking and drying qualities in the preparation of films. Therefore the Brooks process as described in what may be called one of its modifications is entirely different from the Perkins process, and while Brooks does describe a second modification which was also tested, it gave no radically different results. Brooks second example or alternative procedure uses less chemical and more heat. For 100 pounds of fecula, page 1, line 76, he may use only one pound of sulphuric acid dissolvel or mixed with a suitable quantity of water, line 84, which is apparently 15 pounds as indicated on line- 87 and 88; this may be either as water or as condensation from the steam which he uses, indicated in line 91 to 92, and is approximately the same amount as would be required in the first example. For convenience in this case he prefers to add the acid first and then the persulphate, using only one-half pound, line 79, dissolved in an equal quantity of water. (Line 82.) This is just about the minimum quantity of water it requires if the persulphate—if the water and the persulphate are slightly warm; this mixture is then heated to about 200 degrees Fahrenheit, and there again a slightly higher temperature is applied.

Brooks also points out on the second page that instead of washing the acid and persulphate out, which leaves the starch entirely wet, he says the batch may be neutralized with borax or simply neutralized; in either case the amount of water would be required to be added to distribute the neutralizing agent.

The borax if dissolved figures out to about the same amount of water that would be required in the other method of procedure, so that it apparently makes no difference which of the two we use, and the results are not widely different in product.

The Brooks specification required considerable study and experimentation to obtain precisely the results he describes, but the description is all there if it is sifted out and put together. Neither this intermediate product, nor the solution of his finished glue, like sizing material, were fit for vegetable glue for veneering work. The process was entirely different. He uses starch which had been degenerated much too far; he discloses no dissolving step of the basis with any particular amount of water, and he does not suggest the dissolving of this final glue-like sizing product of his, with caustic soda at all. The films which it made were so contractile and brittle that they broke up into small pieces in drying and explained why the block [fol. 63] tests of the product showed altogether too weak an effect to indicate its availability for veneer work.

Q. Have you also seen and read the Dornemann French patent 232,781 which has been offered in evidence on the part of the defendants?

A. I have.

Q. Have you made any tests of the process therein disclosed?

A. The patent doesn't give sufficient definite data to enable one to carry out any particular description that might be called the process of Dornemann. I have tried a number of methods of doing the same thing that might fall within the general limits indicated by Dornemann however.

Q. Will you please explain a little more in detail what Dornemann does describe and compare that with the process of the patent in suit?

A. The patent is for the making of agglutiments from fecula and their applications, and again is described as an industrial process for the making of pastes or mucilage; both of these words or the phrases, râther, would be used in the original as descriptive of sizing or finishing materials, and the specifications throughout bears the ear marks of textile sizing industries; the process consists of mixing potato, manioc (which is cassava) or any other starch, with water, to make a milk of it, and then adding alkali; the amount of water to be used is not indicated, but the amount of alkali is from 20 to 30 per cent of the weight of the starch used.

The subsequent description of what happens gives a very fair idea of the amount of water that was intended to be used, but he mentions no specific amount. The batch is stirred up for one-half to two hours and the resulting size may be neutralized with acid if desired, also from 10 per cent to 30 per cent of an inert material, such as barium, sulphate, kaolin, etc., may be added.

It is precisely with the use of such inert materials that agglutinants are required, binders to hold material of that kind together, and it is in the sizing of certain textiles to some extent, but particularly in the sizing of paper, that mixtures of that sort are employed. Dornemann does not suggest the necessary small amount of water prescribed by Perkins, in fact as we shall see rather the contrary; nor does he suggest the use of degenerated or low water absorptive starch, or the selection of any particular kind of starch as making any difference. For [fol. 64] his purpose as in the textile sizing work and in the paper industry where heavy sizing was more or less used, the precise variety of starch is to some extent a secondary matter, the amount of water is a secondary matter. Particularly in the textile industry, it is varied over wide limits to get the effect required on the textile. Dornemann uses altogether too much water in my opinion because he speaks of putting his stirrer through the bottom of the apparatus to avoid the possibility of his glue throwing out or splashing out of the mixer, and that would scarcely be possible with a heavy material. He also speaks of allowing it to settle, and of skimming it; again with the glues of the vegetable veneer glue art there would be very little settlement and very little chance for material to rise to be skimmed.

What Mr. Dornemann wants when he finishes his glue in many cases is more body, but his way of getting that is not to reduce the amount of water but to add ten to thirty per cent of inert material; that is the usual way of doing it in the sizing arts. Strength is not the essential point but rather finish in those arts.

The use of barium sulphate therefore, also the neutralization of the glue, that indicates that Dornemann had in mind a weakly adhesive size or agglutinant for textile finishing. The patent comes nowhere near the veneer or wood glue art

and is mainly of interest as showing the development of some of the earlier sizes called vegetable glues that were discussed in the Hood-Wright and West Michigan cases in detail; the material is the same general character, has some of the same characteristic additions of hydroscopic materials, and throughout is simply a step further along the same textile finishing line. The patent is wholly idefinite as to the necessary amount of water and contains no suggestion whatever of a glue required to have great mechanical strength.

The Court: The description that water is added until you form a milk would indicate a larger percentage of water than in Perkins?

A. Indicates that he might easily do so. It is perhaps not as specific as the splashing quality described later, because a milk of starch is produced with one and a half parts of water; two parts of water, it is rather creamy when you get as low as one and a half or two, but the phrase is commonly used in handling starch for a very wide range of proportions; the indications are that if he had been distinguishing (finely) he would have said creamy rather than milky. I think your Honor the patent is in my opinion not [fol. 65] at all related to the glue art and contains no disclosure or suggestion whatever of a glue for wood.

Q. Doctor, have you from time to time made any tests of the viscosities of different so-called raw starches as they come on the market?

A. A great many in several different ways.

Q. Can you give me the results of tests of viscosities on so-called Royal brand of cassava starch over any period of time? If so please do it.

A. My records indicate that the average of Royals—that is, what was purchased as Royal—during 1920, was about 46 viscosity on a 20 to 1 test; about 60 in 1919; about 52 in 1918; 77 in 1917; 82 in 1916; 76 in 1915; 90 in 1914; 93, nearly 94, in 1913. 102 in 1912. Prior to that time I have many records but those that I have are somewhat lower. In 1911 I had 77, as compared with a boil-up test today of about—varying from 47, 50, 60, 65; as I say they rarely come close together. There is a grouping but they splatter up and down the line.

Q. If I understand you correctly the viscosity of this Royal brand is shown by these tests which you have there, the viscosity has reduced from over a hundred down to under 50 during the last eight years or so?

A. Substantially that is the trend of it.

The Court: With ups and downs?

A. More or less ups and downs: the effort has always been to buy—that is, my understanding of the effort of the factory has always been to secure the best that they could get, the highest viscocity that they could get.

Q. You mean the Perkins factory?

A. Yes.

Q. And that is because they further degenerate it by chemical treatment?

Mr. Wiles: You mean the Perkins Company does?

Mr. Crosby: Yes.

A. Why, I think so, yes: I think that is the main reason.

Q. What can you say of the trend of viscosity changes in the G. T. A. Brand such as the defendant uses as testified this morning?

A. G. T. A. is one that I have not been particularly familiar with. I have met a few samples but wherever I have seen the results of its use, the viscosity was medium. I don't know its history.

Q. What do you mean by medium as compared to the 46 I think it was of Royals there?

[fol. 66] A. I should say considerably lower, somewhere near 30 and possibly 35.

Q. Can you give any results of viscosities on other brands of cassava starches showing changes in viscosities as they come on the market during the last 8 or ten years?

A. Several. The M-4 for instance was one of the starches which was early regarded as a very desirable raw material, and showed a viscosity at the beginning of about 125, after which it fell during the course of years rather sharply, in fact to 52, and when we last stopped using it in quantity had dropped to about 30. The V-1 or V-i was in 1911, our figures are about 126, and in 1912 somewhat better, 136. Then they dropped to the 90's, 89, 78, 55, with a recovery to 72, and down to 39. The Ikan was at one time as high as 104 and has now fallen to 43. There are a number of such

illustrations; the general trend of almost every brand that we recognize and that I have been following, has been a downward trend.

Q. In giving these figures of viscosities of different brands of cassava starches at different times, when you have given one figure, does that mean a single test or an average of a number of tests over a short period of time?

A. It means in every case the average; that is, in almost every case where I have been following the progress of these averages it means the average of all the carloads purchased during the year, taking averages for the years as single instances of a viscosity.

By the Court: You heard Mr. Grossman's testimony?

A. I did.

Q. You heard his testimony as to the use of a base, glue base, which consisted of as I understood him raw cassava starch, not degenerated, and the only change made was to remove the impurities and lumps perhaps by a sieving; and applying to that glue base substantially as I understood it the Perkins process for making the finished product ready for use. What have you to say as to the result which will be obtained in applying the final step of the Perkins process to starch in its raw condition not degenerated?

A. If the raw starch, not degenerated, is truly raw starch in the sense of the Perkins patent, I do not think a satisfactory veneer glue can be made without altering the second—the dissolving step in such a way as to carry out degeneration during that step. As I recollect Mr. Grossman's testimony he qualified the answer that it was not degenerated [fol. 67] in any way by saying first so far as he knew, and second, only slightly degenerated during the dissolving treatment. The degree of degeneration during that dissolving treatment I think he admitted that he had never measured, he found no way of measuring except estimating with the eye. I have repeatedly measured the effect of prolonged violent agitation and heat on these materials while the dissolving step was going on, I have had occasion to do so a number of years ago in connection with some work that we were doing, and I have had occasion to do so recently, and I have seen the viscosity which is our expression of the degree of degeneration, the actual viscosity of the glue

itself during the mixing operation, drop from over 250,000 times as much as water down to 60,000 times as much as water, a drop of four to one during a period of three hours. The usual viscosity of the Perkins glues as mixed up in acordance with the description of Perkins is in the vicinity of say 125 or 126,000; it swings somewhat up and somewhat below that; that is purely a question of the practical working of the glue on the veneers. The finished glue of the defendant in this instance was 156,000 so that as nearly as I can judge there is no question but that degeneration occurred during the mixing operation, and the viscosity of the base was only—before it went into the mixer, was only about half what as I gather from Mr. Perkins description he regarded as the desirable raw high viscosity starch with which to begin a preliminary treatment.

The Court: Then I take it your conclusion is this: if the resultant glue ready for use was satisfactory and sufficient for glueing veneers, the starch at some stage, either prior to its treatment or during its treatment, was degenerated?

A. It was; that is my opinion.

The Court: I do not know that I have quite understood the testimony. Do I understand the claim to be that the defendants glue or the glue which the defendant has been using is made from the Kane base?

Mr. Wiles: Yes.

Mr. Crosby: They have also used some International.

Mr. Wiles: I think it is conceded by the interrogatories that they used some of the glue which your Honor held was an infringement in the prior case, so that as to that we are not raising any question before you, although we want to save a record on it; but as to the great bulk of their material that is here involved, is the Kane product, which [fol. 68] is straight glue, just as raw as we know how to get it.

The Court: What was the difference between the product generally used, the glue generally used and the one produced at this experiment so-called?

Mr. Wiles: That experiment was with a glue of the very heaviest kind on the market, because we wanted to know ourselves—I mean counsel and the manufacturer Kane wanted to know, and get the position out here, force it out, that this patent if construed the way the plaintiff construes

it covers every starch there is, and we therefore took the heaviest known and the heaviest available starch, the highest grade so-called, and the high grade is measured by high viscosity, the highest grade that is known, that every expert agrees is the very most viscous that there is, and used it in percentages. (Argues.)

The Court: I really didn't ask for an argument. As I understand it so far as the practical use of the glue in the factory of the defendant, this experimental glue if I may so term it, has not been used except in that one instance?

Mr. Wiles: One instance, the regular glue is G. T. A.

The Court: And that is the glue which has been described by Mr. Grossman?

Mr. Wiles: Yes.

Cross-examination by Mr. Wiles:

Q. In this viscosity test which you say you performed, what is the viscosity of water by the same method?

A. 16, taken cold. What viscosity tests do you refer to if I may ask?

Q. I mean the one where you took this 20 to 1 test, and you stated the range of viscosity of the various starches over a period of years, on that same test what was the viscosity of water?

A. Sixteen.

Q. How did you make up your solutions, 20 to 1 solutions?

A. 20 parts of water to 1 of the starch base, simple admixture.

Q. Then did you boil or did you add caustic soda?

A. Boiled. I have carried similar tests out with the bursting, with caustic soda, both at 20 to 1 and at a considerable number of other strengths here and there along the line, but that is the only routine test that has been car- [fol. 69] ried out over the period of years which is therefore strictly comparable.

Q. The caustic soda results generally compare with the boiling up results, do they not?

A. They generally do, with certain very wide exceptions now and then.

Q. How hot was your heating? Did you just boil in an open vessel or with live steam?

A. With live steam.

Q. At what temperature?

A. At approximately 100 pounds.

Q. The hundred pound live steam test considerably reduces the viscosity, does it not?

A. As compared with what?

Q. Well, as compared with what it would be without it, made with caustic soda for example, cold; in other words, isn't the tendency of the live steam boiling at a hundred pounds pressure to bring all of these starches towards a common level?

A. I don't think that is so much responsible for the apparent bringing of the starches to the level as it is with any type of apparatus for measuring viscosity which depends on flowing a liquid through a hole or through a short tube, gives deceptive results; both of them may contribute but I think the main one is the type or viscosity instrument.

Q. According to your statements here you find Royal starch as low as only two and a half times water in 20 to 1 solution?

A. I don't recollect stating——

Q. Didn't you state 40 to 1 as low as 40, I mean as low as 40 viscosity for Royal?

A. An occasional sample. I think I can show occasional samples as low as 40, which is more than twice, that is, two and a half times, roughly.

Q. I said two and half times?

A. I beg pardon. Now, it is to be remembered that the viscosity of that solution is taken hot, and as I said at the beginning of your cross-examination the water is taken cold and that makes a great difference.

Q. How would these viscosities run of this starch, if it were cooled before the viscosity was taken?

A. These five percent viscosities would probably gelatinize if they were allowed to cool.

Q. When you use caustic soda in the viscosity tests, of course they stay cold all the time?

A. They do.

[fol. 70] Q. And this glue as I understand it which is in practical use is used cold, isn't it?

A. It is.

Q. Isn't it really a fairer test to make your viscosity tests on starches cold?

A. I have always advocated that myself, I always thought so, but these records were records that were comparable on a comparable instrument which had been used by the Inventor, and as you see they are in a general way comparable, so that those records are the only ones that I have continuously over a period of years. I have found the same tendency to follow in the viscosity of starches taken on a solution made with caustic soda, wherever I have taken them, the same general tendency, to lower viscosities in the later years that we have found with the so-called boil-up test.

Q. When you took this sample of the defendants glue base did you make a like test on that?

A. A boil-up?

Q. This boil-up viscosity test on the 20 to 1 solution?

A. Yes; 57 was the viscosity of that, on that boil-up test.

Q. That was higher then than your 1920 average for Royal was it?

A. Yes. I should think so.

Q. You know as a matter of fact don't you that G. T. A. is less viscous than Royal as a rule?

A. I have always regarded G. T. A. as more degenerated than Royal, yes.

Mr. Wiles: I wish you would answer the question. I move that it be stricken out.

The Court: It may go out.

A. Yes.

Q. When you find a year's average of Royal that runs under G. T. A. you think the record is perfectly all right?

A. I do, because the year's average is invariably lowered considerably by some cars that are not as good as others and in taking G. A. for direct use a fairly high viscosity may be taken and used, if the treatment in the kettle is prolonged so that a high G. A. may easily come above the average of a Royal.

Q. Royal is a regular food starch isn't it?

A. I understand that that is one of the brands preferred for food stuff because of its purity and freedom from meal and for its whiteness and cleanliness of preparation, rather [fol. 71] than for its high viscosity. I have always sus-

pected that that whiteness and cleanliness was in later years more or less secured by chemical treatment of some kind, though I have no proof of it.

Mr. Wiles: I move the suspicion of the witness be stricken out.

The Court: No, I think that may stand.

Mr. Wiles: When he says he has no proof of it in the concluding part.

The Court: I understand.

Q. During like periods what has been the viscosity in a 20 to 1 solution of the Perkins glue base on the market as such?

A. 20 to 1?

Q. Yes.

A. I don't know that we have made the 20 to 1 boils with the Perkins glue base, we generally boil at 9 to 1.

Q. You haven't data whereby to compare the Perkins base with the ordinary raw starches?

A. Only in exceptional instances, I haven't for continuous periods over a term of years.

Redirect examination by Mr. Crosby:

Q. You spoke of getting a viscosity of 20 to 1, a little over 50 on the G. T. A. I think it was?

A. That is my recollection. I haven't those tabulated figures.

Q. That result, was that on one sample or on samples covering months or a year?

A. I never had much G. T. A.

Q. Was that test simply a single sample?

A. My recollection is not one single sample but few scattered samples, I should say not more than a half a dozen.

Q. Over what period of time as near as you can remember?

A. Not over a month or two, when we wanted some of that material samples were submitted, just for laboratory examination.

Q. That was how long ago?

A. My recollection is about two years ago during the period when the—I should say about two years ago.

Q. Those samples were not samples of the defendants base here?

A. No.

[fol. 72] Q. The only test 20 to 1 boil-up test made on the defendants base was the one sample you obtained when you were there?

A. The only one.

Q. What was the 20 to 1 boil-up test on the defendants base? If you have stated I have forgotten?

A. I think so. 57 I think, that is my recollection of it, I will look up to make sure. Yes.

Mr. Wiles: I would like to ask one question that I think I overlooked: You stated that the viscosity of the defendants glue was 160,000. How long was that measured after the glue was mixed.

A. It was measured a number of times. First I think within 24 hours after it was made; then the sample was stirred up and measured again and allowed to stand, and it was measured later. The peculiarity of the degeneration brought about in the kettle is that once the glue has been degenerated by heat and caustic in the kettle the degeneration is very apt to be slowly progressive, if it has been completely done, and that is the reason why I measured these from time to time after taking the sample to ascertain what it is going to do next, with a view of determining whether degeneration has been done in the kettle or confirming the question whether degeneration has been wholly done in the preliminary sample. In this case I found that the degeneration was progressive, slow but progressive, after I took my sample, and it looked as it worked on the spreader (so far as one could judge by the eye) like a glue about the viscosity that we found. Those figures are—it is one of the most difficult things I know of to determine what the viscosity of a solution is by looking at it, but after you have actually made true viscosity examinations on a great number of samples, it becomes possible to judge.

Mr. Wiles: That is all.

Mr. GROSSMAN, recalled and examined by Mr. Wiles.

Q. Please state how you make your standard viscosity determination for the testing of the starches you buy?

A. I take 175 C. C. of water at 60 degrees Fahrenheit, place it in a glass beaker, place into it five grams of the flour to be tested, then dissolve. I have a bottle carrying the solution which carries five grams of caustic soda in 25 [fol. 73] cc. of water; after I stir the starch solution I slowly add the caustic soda solution, so that when I have the homogeneous mass, I have 5 parts of starch against 200 parts of water, in addition to the five parts of caustic soda; the samples are allowed to remain at room temperature for one hour and the viscosity taken through the tube and then allowed to stand another hour and I carry these tests through for four successive periods of one hour each.

Q. Taking the viscosity at the end of the first hour as your standard, will you say how the viscosity of your G. T. A., the kind you have sold as a glue base and the kind the defendant used, compares with the water?

A. The results I have tabulated are as follows: Kane base at the end of the first hour 145 seconds, the Perkins base, 80 seconds.

Q. Leave out everything but the Kane base?

A. I beg your pardon.

Q. On your instrument what is the viscosity of water?

A. Water depending on temperature will be 26 to 30 seconds, the average is 28 seconds at 60 degrees Fahrenheit for the water.

Q. Is this figure which you have given the result of a single measurement or of an average?

A. It is the tabulation of all the records I had which I computed over a period of almost two years.

Q. That is two years relatively recently?

A. Well, I have been carrying them on right along, but our glue base never runs below 140, by my test, I always give it a leeway both sides because being a comparative test and a difference of one or two degrees in temperature give a difference in several seconds in viscosity. You take in a hot day like today, where the room temperature is about 80, we have to resort to faster work to get our tests, but I try to keep the solutions around 60 degrees.

Q. And that is the viscosity, 140 or upwards, that the defendant has been using, is it?

A. Yes. At the end of the first hour on my test; I have the results for several hours.

Cross-examination by Mr. Crosby:

Q. Regarding the viscosity test, there are several different kinds of instruments, devices for measuring viscosity, are there not?

A. There are any number.

[fol. 74] Q. And different chemists frequently choose different methods for measuring viscosity?

A. The method is identical, the instrument may differ, the general principle would be to allow the liquid to flow through an orifice.

Q. You have heard of the Engler Viscosimeter?

A. The Engler, yes.

Q. Does that allow the liquid to flow through an orifice?

A. Yes.

Q. You have heard of viscosimeters in which a disc is rotated in the body of the material, the viscosity of which is to be measured?

A. I have never used it.

Q. You have heard of it?

A. No, I won't say I have.

Q. You have heard of MacMichel viscosimeter?

A. There is none in practice in our district, very often, I have never seen it.

Q. Is it not true that different starch chemists in measuring the viscosity of starch solutions by allowing them to flow through a hole, use pipes or devices having different sized holes?

A. Yes, it is very true, the orifice may differ, the quantity to go through may differ, but when you compare it to water, the ratio should be very close.

Q. But the actual readings in seconds on different instruments will not compare at all, isn't that true?

A. Oh, absolutely; absolutely.

Q. They won't compare at all?

A. You can't compare the result of my 145 say with a Saybolt instrument whose opening is different and whose quantity of solution is different.

Testimony of witnesses Stryker, Shields, Birk, Stewart, Grosvenor, Hummer, Wendt, Keieger, Veneklaasen, Pennington, Huntley, Kirk, Hood, Worfel, Miner, and Grosvenor, introduced herein by stipulation from the case of Perkins Glue Company vs. West Michigan Furniture Co. et al., Equity, 1899.

Testimony of JULIUS B. B. STRYKER, a Witness on Behalf of Plaintiff, Taken at the Trial, October 28, 1919

I am president and general manager of the Perkins Glue Company. I have been connected with the Perkins Glue Company since is reorganization from the Standard Manu- [fol. 75] facturing Company in 1910, in various capacities ranging from foreman in the mill to my present capacity. I have been more or less familiar with the art of furniture veneering for about twelve years, that includes familiarity with the art of veneering with both animal glue and vegetable glue to the extent that I have come in contact with the use of animal glue in veneer plants where it has been replaced by vegetable glue. During the last twelve years all of my time has been given to this business of veneering glue. Vegetable glue and animal glue are the glues used today for glueing up wood veneers and in woodworking plants, particularly furniture plants, or in the making of veneers for furniture work.

A very large percentage of our present customers used animal glue for glueing up veneers prior to the time they put in our vegetable glue. The Perkins Glue Company has somewhat over three hundred customers to which it furnishes Perkins glue base. This vegetable glue is used in the manufacture of pianos, Victrolas, doors, sewing machines, all kinds of furniture, household and office both. The approximate number of pounds of glue base that our company, Perkins Glue Company, has put on the market during the last five years, annually, is about nine million pounds. Considering that there would be no increase in prices of animal glue, if animal glue was to fulfill this demand, the approximate glue which our Perkins glue has saved the veneer trade during the last five years, on the

actual difference in price between our vegetable glue base and animal glue suitable for veneering, would be about nine and a half million dollars. As to the practical advantage of the Perkins glue over animal glue in this industry, it is somewhat easier and quicker to prepare; there is no bad odor in connection with it, as there is with animal glue. It can be kept a much longer time before using than animal glue; it is cheaper, more economical, and there is no necessity for keeping the glue room in which the workmen work up to a certain temperature. The windows can be opened sufficiently to give them air. And during the war the supply of animal glue was so curtailed that it would be doubtful if a good many plants would not have had to shut down entirely if it had not been for vegetable glue to take the place of it. There is not the slopping around of the vegetable glue on the floor and on men's hands and clothing as there is with animal glue. This is because the viscosity of vegetable glue is materially heavier than that of animal glue; it does not flow so readily as animal glue, and consequently does not slop around; [fol. 76] it stays put, in other words, more than liquid animal glue. The number of concerns which formerly used animal glue for veneering and now use vegetable glue, I would state as approximately ninety per cent.

Testimony of Julius B. Stryker, Recalled at the Trial

The concerns in Grand Rapids that are using our vegetable glue are Berkey & Gay, Sligh Furniture Company, Luce Furniture Company, Royal Furniture Company, Phœnix Furniture Company, Grand Rapids Furniture Company, Imperial Furniture Company, Grand Rapids Chair Company, Grand Rapids Show Case Company, Grand Rapids Piano Case Company, Johnson Furniture Company, Macey Company, John Widdicomb Furniture Company, Widdicomb Furniture Company, Wallace Furniture Company, plant No. 1, Wallace Furniture Company, plant No. 2, Steel Furniture Company, Bissell Carpet Sweeper Company; and outside of Grand Rapids, in this vicinity, Hanson-Ward of Bay City, Graham Brothers

of Mount Pleasant, Cadillac Veneer Company, Cadillac-Detroit Auto Dash Company, Milford, Chase-Hackley Piano Company, Muskegon, Story & Clark Piano Company, Grand Haven, Cable Nelson Piano Company, South Haven; and outside of Michigan, some are Singer Manufacturing Company plant at South Bend, Indiana, Glasgow, Scotland, Cairo, Illinois, St. Johns, Canada; also the Victor Talking Machine Company, Camden, New Jersey; W. B. Kimball Piano Company, Chicago; Lyon & Healy, Chicago; Kohler & Campbell Piano Company of New York; General Electric of Schenectady, New York; Pullman Company of Pullman, Illinois. Those that I have mentioned outside of Michigan are simply a few of the representative users of our glue.

Deposition of Frank B. Shields, Taken on Behalf of Plaintiff April 7, 1919

I am treasurer and manager of the International Process Company. I am also secretary and a stockholder. The business of the International Process Company is the manufacture of vegetable glue. That company was incorporated in January, 1919.

[fol. 77] As to whether the International Process Company sold vegetable glue material to any of the defendants, it has.

I am not connected with the National Process Company of Indianapolis. I have been connected with it from its organization in 1911 until the first of January, 1919. The National Process Company is still in existence. I am not at the present time a stockholder in it. I ceased to be a stockholder in it in December, 1918. While I was connected with the National Process Company I held the offices of secretary, treasurer and manager during my entire connection with the company. During my connection the other officers were J. M. Shields, president, and the vice-presidents, as far as I can remember, were H. C. Johnson, Lynn Faulkconer and N. S. Blish. Mr. J. M. Shields was president throughout the entire period. He is my father, residing at Seymour, Indiana. None of the vice-presidents I have mentioned took any active part in

the management of the business while I was connected with it. While I was connected with it, its business was the manufacture and sale of vegetable glue and it sold vegetable glue material to the defendants.

Besides myself, the other officers of the International Process Company are Major A. Downing, president, and O. C. Pantall is vice-president. They do not either of them take any active part in the management of the business. My father, Mr. J. M. Shields, is not interested in the International Process Company.

I think the National Process Company is still in the business of selling vegetable glue material. When I severed my connection they had certain contracts to fulfill which had not expired. I do not know whether it is the intention that the National Process Company to cease doing business in glue material as soon as these contracts are filled and expire. I do not know who any of the officers of the National Process Company are today.

I am connected with the Napco Corporation, being secretary, treasurer and manager. The business of that company is the manufacture of casein glue and certain textile chemicals. I have been connected with that company since its organization in 1916 down to date. They have never sold any vegetable glue.

I am also connected with the Shields Company. I have been its secretary, treasurer and manager since its organization in 1915, I believe, down to date. The business of that company is the sale and leasing of machines necessary for mixing and applying vegetable glue, animal glue [fol. 78] and casein glue. The company never sold any glue. For about one year after their organization they also dealt in stoves.

The International Process Company, the National Process Company and the Shields Company are incorporated in the State of Indiana.

I first became aware that the Perkins Company had brought these suits about February 10, 1919.

Q. 50. Has the International Process Company agreed to reimburse any of these defendants in any way for any damages or profits that the courts may decree them to pay in these cases?

Mr. Macauley: Objected to as immaterial and irrelevant to any issue in any of the three cases in which these depositions are taken. We admit that the National Process Company has furnished glue material to each of the defendant companies and that the International Process Company has furnished vegetable glue material to Hood & Wright and to the West Michigan Furniture Company, and that therefore these companies and the witness are financially interested in the event of these suits, but the line of examination which has been entered upon is immaterial to any issue in the suit; and the witness is instructed that he need not answer the question unless called upon to do so by the court. It is conceded that the witness' interest is such as to make him an unwilling witness for plaintiff. But it is not conceded that either the witness nor the companies with which he is connected are interested in the case.

Q. 51. It has been stated that you or your companies have undertaken the defense of these suits on behalf of the defendants; is that true?

Mr. Macauley: The witness is given the same instructions in regard to this question.

* * * * * * *

Mr. Crosby: I ask Mr. Macauley, as a matter of record, whether he represents the witness Shields. If he does not, I object to his giving any instructions whatsoever to the witness, or any advice to the witness as to answering these questions.

* * * * * * *

Mr. Macauley: While the advice of counsel for defendants as expressed above is believed to be perfectly correct, [fol. 79] it is admitted that for the purpose of protecting the witness' rights in this examination, I do represent him.

Witness: I am a graduate of the chemical department of the Massachusetts Institute of Technology, a graduate of Course 5, the regular chemical course. I left there in the spring of 1908. I graduated in the spring of 1907. After I graduated I was assistant instructor in the chemical department in proximate technical analysis. After I left

the institute I worked for a short period in the research laboratory of the General Electric Company at Lynn. I left there in September, 1908. My duties there were trying to develop a process for the manufacture of boron carbide. After leaving the General Electric Company I went to the Smithport Extract Company, Damascus, Virginia, as chemist. I stayed with them about six months as chemist. I stayed with them until about the first of January, 1911. Besides being chemist for about six months, the other duties I performed, I practically had charge of their manufacturing. They were manufacturing tanning extracts. After I left that company in 1911 I organized the National Process Company for the manufacture and sale of vegetable glue. I did hear about Perkins glue while I was working for the Extract Company in Virginia. I did not see it being used while I was working for the Extract Company. I did not hear that it was being used in that town or vicinity which I was there in Virginia.

The National Process Company, while I was connected with it, did sell vegetable glue material to the West Michigan Furniture Company, the Carrolton Furniture Company and the firm of Hood & Wright, defendants. I think Mr. George P. Hummer, of the West Michigan Furniture Company, acted for that company in purchasing this vegetable glue material from the National Process Company. I think Messrs. Hood and Wright acted for the firm of Hood & Wright in purchasing vegetable glue material from the National Process Company. I think some one by the name of Schurman—I forgot his initials—acted for the Carrolton Furniture Manufacturing Company in purchasing vegetable glue material from the National Process Company. Mr. Hummer acted for the West Michigan Furniture Company in purchasing vegetable glue material from the International Process Company. As to whether Messrs. Hood and Wright acted for the firm of Hood & Wright in purchasing glue material from the International Process, [fol. 80] we did business with him only by letters and their letters were signed "Hood & Wright"; no personal signatures.

The National Process Company kept records showing the amounts of sales and the date of sales of vegetable glue material to the three concerns mentioned as far back as January 1, 1916. Beyond that time I am not sure.

The International Process Company has kept records showing the amounts and dates of sales of all vegetable glue material sold to the three concerns mentioned. The factory of the International Process Company is at the southeast corner of 11th and Cornell Streets, Indianapolis. We occupy only part of the building, about 15,000 square feet. The International Process Company does not make there anything besides vegetable glue material. The International Process Company has no other factory in this country. The 15,000 square feet is devoted exclusively to manufacture and storage; not over 400 square feet are used for manufacturing.

When I severed my connection recently with the National Process Company, its factory was in the same building. They have done practically no manufacturing since the middle of 1918 when it became practically impossible to secure the raw materials which they had been accustomed to using. They are not manufacturing in this building. I do not know whether they have any other factory where they are making vegetable glue material. I think that if they are selling any vegetable glue at the present time it must be glue manufactured prior to the severance of my connection with them. While I was with them they were manufacturing their vegetable glue at the plant located on the southeast corner of Shelby and the Belt, in Indianapolis. That plant had about 20,000 square feet of floor space; not over 200 square feet were used for what might be called manufacturing.

The International Process Company manufactures all the vegetable glue material it sells. That was also true as to the National Process Company while I was connected with it. The International Process Company has a foreign factory. It is for the mixing of starches to be sold as vegetable glue base. It has only one of such foreign factories. That is located at Singapore, Straits Settlements. As to whether that factory goes under the name of the International Process Company in Singapore, I am not able to answer positively. There is some local regulation providing for registration and, as I understand, there is some time limit on this. I am not sure that our local representative has yet had sufficient time to comply with the regulation. Our local representative in Singapore is Elmer

[fol. 81] Wetzel. For temporary use our factory is in a building owned by a part- by the name of McAllister. Mr. Wetzel is the man in charge of the International Process Company in Singapore. They have not manufactured any vegetable glue there for the National Process Company.

As to whether the International Process Company sent any one to Singapore to instruct them as to how to manufacture the vegetable glue which is to be sent here to the International Process Company, Mr. Wetzel was employed for that purpose. Mr. Wetzel entered our employ the middle of October, 1918, in the United States. He was instructed for two weeks in our methods and left about November 1, 1918, for Singapore. The International Process Company was not incorporated at that time, but we were doing business as a partnership. The business was in its formative stage. The partners were Major A. Downing and O. C. Pantall and myself. At that time I was still manager of the National Process Company.

When I said I instructed Mr. Wetzel as to our methods, I meant the methods of the National Process Company. The International Process Company was projected for supplying vegetable glue to the foreign market only. It is now supplying many glue users in this country which formerly bought from the National Process Company.

As to whether the only customers which the National Process Company is continuing to supply with vegetable glue are those with whom they have contracts which have not expired, I have very little knowledge of what they are doing.

As to whether Mr. Wetzel was instructed and made familiar with the manufacture in the factory of the National Process Company, the National Process Company were doing no manufacturing at that time, so he had to get his knowledge practically entirely in my office.

Mr. Wetzel is an American. He has never been in Singapore before. He attends to our business exclusively over there.

The International Process Company, Singapore, has shipped no vegetable glue material to this country. It ships it to our customers in the far East. All the vegetable glue which the International Process Company sells within

the United States is manufactured at our Indianapolis factory.

As to who in the International Process Company is familiar with the way in which that company makes its vegetable [fol. 82] glue material such as it has sold to the West Michigan Furniture Company and the firm of Hood & Wright, our chemist is the only one besides myself who knows the materials that are used. Our chemist knows what goes in it and the man at the plant knows what he does to it. Our chemist's name is Glover M. Birk, of Indianapolis. He devotes, I should say, on an average about three hours a week to our work. The name of the man in the factory whom I said knew what he did to the stuff is Mr. P. M. Stewart.

As a matter of fact, I am just as familiar with the way in which both of these companies have made their vegetable glue as any of the other men I have mentioned.

During the past three years we have made only very slight changes in our methods of manufacturing this vegetable glue. We had in our employ at one time a man by the name of Martz. While he was with us we were manufacturing one of the ingredients of our vegetable glue by treating within hydrochloric acid gas. That ingredient was corn starch. After we had treated this corn starch we added to it or mixed with it other untreated starch. That other untreated starch was largely cassava starch or tapioca flour. I say "largely" because it was a mixture of untreated corn starch and untreated tapioca flour. Those two we mixed with the treated corn starch. The completed glue base consisted of from twenty to twenty-five per cent of treated corn starch, from seventy-five to eighty per cent of untreated corn starch, of which about ninety per cent was tapioca flour, and this vegetable glue base the National Process Company sold to consumers for the gluing of furniture veneers.

Regarding the treatment with hydrochloric acid, the starch was first heated to a point where the mixture of water and hydrochloric acid was probably mostly vaporized and acted upon the starch in this form. We first prepared a solution of hydrochloric acid gas in water. Roughly, I would say that the solution contained about five per cent of hydrochloric acid gas, but the amount of this solution was, I think, not over ten per cent of the weight of the

starch. To the best of my recollection, it was about ten per cent. Before we applied this hydrochloric acid solution to the starch I think we heated the starch. As soon as possible we bought this corn starch already treated, but at one time the factory could not produce fast enough to take care of our requirements and we started treating our starch by this method, although we had not experimented with it fully. We heated the corn starch in a jacketed mixer heated by steam. After the starch was heated in the mixer we [fol. 83] sprayed in this hydrochloric acid solution. As I remember it, that is the way we did it most of the time, although it is possible that part of the time we sprinkled or sprayed the acid in before the mixture was heated. The method was only in an experimental stage. The National Process Company sold considerable vegetable glue material made up in this manner which I have explained.

Regarding the considerable quantity of the corn starch which we used for this mixture which we bought already treated, we bought this under the name of 90 degree thin boiling corn starch. Some of it may have been higher in fluidity. We purchased this treated corn starch of the Douglas Company, Cedar Rapids, Iowa.

As to whether we ever used any other method of process of making vegetable glue base, before we used soda, we never used soda in making a vegetable glue base. In the process referred to above we found that a small quantity of soda was necessary in order to neutralize the acid that was left in the starch; but it was used solely for the purpose of stopping the reaction.

As far as I know, no soda is used in the manufacture of our vegetable glue material. In the plant where it is made another chemical is also manufactured which occasionally gives off acid fumes and the chemist has recommended that a very small quantity of soda ash be mixed with the glue base to prevent any possible deleterious action of these occasional acid fumes. By soda ash I mean the chemical known as sodium carbonate. The nature of the acid fumes which I say are given off is probably acetic acid, although this is a manufacturing operation still in the experimental stage. It is the manufacture of chrome acetate. It is a hot mixture to which acetic acid is added and naturally some of the acid is vaporized. Most probably it is

due to heat, but adequate provision has been made during the past month to carry these fumes out of the building. The temperature of the mixture to which the acetic acid is added is about 110 degrees Centigrade. The mixture contains principally sodium bichromate. It is a secret process, developed at considerable expense. It has no connection whatever with the making of vegetable glue.

As to how did we treat any of the starch to make vegetable glue prior to the time we put in the soda and after the time that we ceased to use the hydrochloric acid treatment, I would say we did not treat starch any other way. We first began putting in the soda about the middle of 1916. It was put in in dry form. We have never put any [fol. 84] in in wet form. It was put in in the form of a fine powder. Never used anything but sodium carbonate. We never used any dry sodium compound except sodium carbonate.

During my connection with the National Process Company they never added any other sodium compounds whatsoever to the starch in any form for any purpose for manufacturing a wood glue.

The International Process Company continued for a time to use the sodium carbonate after it took over the business of the National Process Company in wood glue, but the acid fumes had been satisfactorily disposed of, and it is no longer used.

Whereupon an adjournment was taken until April 8, 1919.

As to the apparatus used by the International Process Company in manufacturing its vegetable glue base, as I remember, practically all the testimony furnished yesterday related to the methods of the National Process Company.

As to what apparatus and machinery is used by the International Process Company, or has been used since it has started business in the manufacture of vegetable glue base, they use two mixing machines made by the Gedge-Gray Company, of Lockland, Ohio. Each machine holds about 700 pounds of dry glue base. We put the treated and untreated starch and a very small percentage of sodium carbonate into these mixers. As to whether there has been any change in the method since the International Process Company started business, we have experimented with

small quantities of materials, but practically our entire output has been made as above described. Some of the output, however, has been made with some of these other materials that I said I experimented with.

As to these other materials, we put out a small quantity of glue made by mixing ninety fluidity corn starch, forty fluidity corn starch, tapioca flour dry, sodium phosphate and certain lead salts, white lead and lead acetate. The white lead is a basic lead carbonate.

As to the percentage of sodium carbonate the International Process Company has been adding, until recently when the acid fumes referred to were disposed of and the sodium carbonate left out, we were using, as I recall, less than one half of one per cent sodium carbonate. That which we used came in a dehydrated form, in the form of a dry impalpable powder called soda ash.

[fol. 85] As to whether the International Company has ever used any so called gums in its vegetable glue, we have never used anything except the materials I have mentioned. The International Process Company has been using in its vegetable glue, for treated starch, a starch known as laundry starch or, as we put it, ninety fluidity corn starch. We obtain that from Piel Brothers Starch Company, Indianapolis. For our untreated starches the International Process Company has used tapioca flour and corn starch. We obtain this corn starch from any well known starch makers who can supply our wants most promptly or at the lowest price. We have obtained this starch from Piel Brothers Starch Company and I think some has been purchased of the A. E. Staley Manufacturing Company, Decatur, Illinois, and the Douglas Company, Cedar Rapids, Iowa. As to the brands of cassava starch or tapioca flour which the International Process Company has used in its vegetable glue, among the brands we have used are "GA," "KBK," "KTH," "KTK." I think this is all we have used, but I am not quite sure that we have used all of these. We obtained these through the Napco Corporation, from Stein, Hall & Company, New York; Rutger, Bleeker & Company, New York; and Winter & Sons, New York. I am unable to answer definitely which concerns furnished which brand, for all of these concerns handle all of these brands. I thing, however, that the "KTH" was obtained

from Stein, Hall & Company, and any other tapioca flour from the other two concerns. As far as I can remember, neither company has used any of the brands "Royal," "Java GT," "M5," "M4," or "GA Type 46" in making vegetable glue. The International has recently purchased some "Royal" tapioca flour, but I think it has not yet reached us. The "GA" which I mentioned I think was purchased through Rutger, Bleeker & Company.

As to what I mean by the cassava starch or flour which the International Company used being purchased through the Napco Corporation, the International Process Company was only very recently organized and has not the necessary financial standing yet to enable it to obtain the necessary credit with the concerns who supply tapioca flour. The Napco Corporation has financial standing and since the witness is the largest stockholder in both of these companies, he has arranged temporarily for the Napco Corporation to make such purchases as the International Process Company cannot make direct, for which the Napco [fol. 86] Corporation is allowed a purchasing commission.

As I remember, the Napco Corporation has been purchasing very little cassava starch or tapioca flour until recently. Their credit standing that I refer to is with the commercial agencies, Bradstreet's and Dun's.

About three years ago the Napco Corporation manufactured and endeavored to sell some paper sizing, but the venture was not successful. The Napco Corporation has not during the last year and a half obtained any starch materials for its own account. The Napco Corporation does have a factory. It owns the building at the southwest corner of 11th and Cornell, where the International Process Company rents space of them.

When this cassava or tapioca which the Napco Corporation has been buying for the International Process Company comes in, the International Process Company assumes charge of it as soon as it reaches the building. It is taken through part of the building not occupied by the International Process Company. It would not be left for any length of time in that part of the building not occupied by the International Process Company, except possibly in an emergency. As far as I know, such an emergency has not yet arisen.

As to whether the Napco Company does any manufacturing in the part of the building used by the International Process Company, at the present time additional equipment for manufacturing chrome acetate is being installed in part of the building occupied by the International Process Company and the equipment used by the International Process Company is being moved to a different part of the building where the materials used by the International Process Company will be free from any possible contamination by the acid fumes from the manufacture of chrome acetate.

The Napco Corporation after purchasing the cassava starch or flour, turns it over to the International Process Company in the same packages. In fact, the Napco Corporation really has nothing to do with the material after it reaches the building.

As to the mixture which the International Process Company has most used in making its vegetable glue, the percentages of treated corn starch and of other substances, are from twenty to twenty-five per cent of treated starch and the balance is untreated starch. The untreated starch contains some so called untreated corn starch and the rest is cassava starch or tapioca flour. The portoni of the mix- [fol. 87] ture which is untreated starch contains about thirteen per cent untreated corn starch and the balance is tapioca flour. I do not know what the fluidity is of this so called untreated corn starch. It is not sold on its fluidity. We buy it as ordinary pearl corn starch. I have not personally tested the fluidity of this so called untreated corn starch within the last eighteen months or two years. No doubt our chemist tested it from time to time, but I think it does not vary to any extent. He tests the fluidity of different brands of cassava starch which we buy. As to what fluidity he selects, the chemist does not do the selecting. We purchase the material and he varies the ingredients slightly if it is necessary. I do not think any variation has been necessary since the International Process Company started manufacturing. Our chemist does not accurately test the fluidity of the so called treated corn starch. He simply makes a rough test, what one would call a rough factory test.

When the International Company buys its cassava or tapioca, the orders specify a certain brand, such as one of the brands I have mentioned.

The company with which I was formerly connected had purchased considerable quantities of these starches and I knew that they would work all right, from my experience with them with the National Process Company.

After the International Process Company has made up a batch or lot of this glue base the chemist tests it from time to time and the factory makes an occasional rough test. If these tests are not satisfactory, that is, if the- show that the glue base made is not satisfactory, it is set aside and used by maxing small quantities of it in with succeeding batches. By our chemist, I mean Mr. Birk.

As to what sort of tests our chemist makes of this completed glue base, he dissolves the glue base just as it would be dissolved by our customers. He makes no other test that I know of. I think he can tell from looking at it and stirring it whether or not it is satisfactory for vegetable wood glue.

Regarding the vegetable glue base of the International Process Company in which they put in some dry sodium phosphate, I think they made not more than ten or twelve thousand pounds of this. Some of it was sent to West Michigan Furniture Company and some of it to Hood & Wright. None of it was sent to Carrollton. About ten per [fol. 88] cent of dry sodium phosphate was put in. The lead salt was mixed with some of the starch and then this mixture was mixed with the other ingredients. The ingredients of this glue base were ninety fluidity corn starch, forty fluidity corn starch tapioca flour, dry sodium phosphate and the lead salt. As near as I can remember, about six-tenths of one per cent of lead salt. Tapioca flour comprised from ten to twenty per cent of the complete mixture. From thirty-five to forty per cent was forty fluidity corn starch. Thirty-five to forty per cent was ninety fluidity corn starch. The balance was dry sodium phosphate and the lead salt added in the form of dry powder. As to how fine they work, I should say they would pass a 50-mesh sieve. As to why we used *s*uch a large percentage of treated corn starch in this particular mixture and added dry sodium phosphate and lead salts, the dry sodium phos-

phate and lead salts were necessary in order to make the mixture fluid when dissolved by our mixers in the usual way.

Referring to the fact that our chemist tested the various batches of glue base the same way that our customers make it up for use, our customers prepare the glue base for use by mixing dry glue base with from two to three and a half—our chemist tests the glue by mixing it up as our customers will mix it up. The object is to duplicate factory conditions as nearly as possible. He mixed the glue base with from two to three and a half parts of water, and after the dry base is mixed with the water, caustic soda solution is added, a solution containing caustic soda in the amount of from four to eleven per cent of the weight of the dry glue base. As to whether this mixture is made at ordinary temperature or with heat, it is made both ways, depending upon the way in which the glue is to be used by a customer. In dissolving the glue base, the heat and caustic are interchangeable to a great extent, the less heat the more caustic, or the less caustic the more heat is necessary.

As to how many tests our chemist makes on each batch of glue base which the company makes, he makes tests only when new lots of raw materials come in to be used. As to how many tests he makes on the glue base made by the company as to each new lot of so called raw material, I think not more than one or two.

As to whether I will permit plaintiff's expert to visit our factory to inspect the apparatus the International Process Company uses in making its vegetable glue and the materials used in making it, being the representative [fol. 89] of a competitor, we are afraid that he might gain information which would be used against us in other ways. We therefore would not care to have him go through our plant. We will not permit him.

The International Process Company in making this vegetable glue base—the proper amount of each ingredient is weighed out and dumped into the mixer. No particular care is necessary as to which goes in first or the order in which they go in. The material is mixed in a mixer by means of a horizontal shaft to which is attached plates and paddles which is driven by power. No moisture, water

or other liquid, is put into these mixers. Nothing is done to any of the ingredients prior to putting them into the mixer. They are not heated at any time. The materials or the mixture is removed from the mixer by opening a valve in the bottom. The action of the surrounding plates carries all the material in the mixer towards this valve. When the material comes out of the mixer it is sacked and stored for shipment. No treatment other than that stated is given to it before it is shipped.

As to whether anything possibly is added to it after it leaves the mixer, before it is shipped, sometimes the amount of caustic soda necessary to dissolve the glue base is put into a can and this can, tightly covered, is placed inside the bag of glue near the top, before the bag is sewed up. We instruct our customers to use this caustic in dissolving the glue. The International Process Company has never mixed any caustic soda or peroxid of soda with the starch material or glue base. Most of the glue base made and sold by the International Process Company has been made by mixing about twenty per cent of treated or degenerated corn starch with about eighty per cent of untreated starch, about ninety per cent of which was tapioca flour, ten per cent of which was untreated corn starch. The National Process Company made vegetable glue also in this manner while I was with them from early in the year 1912 until about the middle of 1918.

During the years 1915, 1916, 1917 and 1918 the National Process Company did not use anything in making its vegetable glue base besides the treated corn starch, untreated corn starch and cassava or tapioca flour. At no time was the vegetable glue base made either by the National Process Company or the International Process Company varied materially from the proportions referred to above, namely, about twenty-five per cent of treated material, about [fol. 90] seventy-five per cent of untreated starch.

I stated yesterday that at one time it became difficult for the National Process Company to procure its treated or thin boiling starch in sufficient quantities, and this was the main reason why the National Process Company made its own thin boiling starch for a time. Another reason was that it showed a saving of about a half a cent a pound. No

other process of treating starch, other than the gas method referred to yesterday, was used.

As far as I can remember, during the years 1915, 1916, 1917 and 1918 we have never made or had made for us, or purchased, any other thin boiling, treated or degenerated or specially prepared starch other than those I have mentioned. As far as I can remember during the years 1915, 1916, 1917 and 1918, nothing else was put into the vegetable wood glue base in any manner whatsoever other than the materials which I have described. It is possible that we may have made one or two small experimental shipments, but I do not recall any at this time.

The Napco Corporation at one time made some starch sizing material. As to whether the National Process Company took over and used any of that material, I do not remember about this very clearly, but it is probable that as this venture of the Napco Corporation was a failure, any starch materials they had left over would have been sold to the National Process Company. This would have been about 1917. No starch was treated by the Napco Corporation. Anything they put out was simply a dry mixture. That mixture consisted of, as I recall—We experimented with, perhaps, twenty-five or fifty different mixtures trying to secure a satisfactory product. We tried about everything we could think of.

Both the National Process Company and the International Process Company have always kept on hand large quantities of caustic soda. The Napco Corporation has kept on hand peroxid of soda. The Napco Corporation attempted to use the Pexoxid of soda in the manufacture of an adhesive for coating paper.

While I was with the National Process Company I spent only a very small part of my time at the factory, and that is true now with respect to the International Process Company.

In regard to such caustic soda that we shipped our customers, some of it is re-packed before shipment to them [fol. 91] and placed in the bags in the manner heretofore described. Most of it is not re-packed.

Q. Did you select Mr. Macauley or his firm as counsel for the defendants?

Mr. Macauley: The question is objected to as immaterial to any issue in any of the cases, and the witness is instructed that he need not answer unless instructed so to do by the court.

Q. Have you, or any of your men shown any of the defendants above mentioned a copy of a bond allegedly protecting the defendants, or any of them, against loss by reason of these suits?

Mr. Macauley: The objection and instructions are repeated.

As to the officers or officials of the National Process Company today, J. M. Shields is the manager, but as to what office he holds I do not know. He is my father.

As to Mr. Wetzel whom we sent to Singapore as our representative, part of his mission was to establish buying connections. Also, a part of his mission was to pick out or advise us of certain brands or grades which he thought might be suited to our use to make vegetable wood glue. We gave him instructions before he left which would aid him in picking out such brands or grades.

Cross-examination:

Mr. Wetzel's occupation before he became associated with the International Process Company was—he was a lawyer, a practicing attorney. As to his preparation to go to the East for us, our instructing him, the total time which he was instructed was about two weeks. Most of this time was spent in my office. He spent about one day in the factory and about one day making tests.

As to what success we met with the glue material which included a starch which we ourselves had treated with hydrochloric acid, this glue was almost an entire failure and it costs us thousand of dollars. The glue tested all right when it left the factory, but a small quantity of acid which was left in the treated starch of the glue base soon started acting upon the untreated starch of the glue base, with the result that the larger part of this glue that we shipped out was unfit for use when it reached our customers. This material was shipped back to our factory and mixed with sodium carbonate to stop the action of the acid and the

resulting mixture used in the proportion of about twenty-five per cent in the preparation of the National Process Company's vegetable glue base. The mixture in which this [fol. 92] returned deteriorated material was used consisted of about seventy-five per cent untreated starch and twenty-five per cent of this deteriorated material.

As to the circumstances connected with the chemist Martz to whom I have referred as leaving us, Martz had been responsible for the development of this process which had got us into so much trouble. We also found that he was spending much of his time which was supposed to be put in at the factory, elsewhere.

In this hydrochloric acid process the water was not added in sufficient quantity to suspend the starch in it.

Comparing the viscosity of the ninety degree and the forty degree starch, when pasted with caustic soda the ninety degree starch is a very much thinner solution. The ordinary commercial uses of ninety degree starch, it is used in great quantities by laundries and for sizing purposes in the paper trade. The forty degree starch is used mostly, I think, by bakers and confectioners.

So far as I know, the papers which are necessary to do business in Singapore have not been filed in behalf of the International Process Company.

Redirect examination:

It was the first of this year, in the early part of January, that we tried out the process using the dry sodium phosphate and the lead salts.

Regarding the glue base put out, in which part of it was processed with hydrochloric acid and was a failure, the acid left in the base continued to act and over-degenerated the starch base so that it would not work properly for glue when it reached the customer. As to whether considerable care must be exercised in using the proper kind of starches for vegetable glue base, which starches are not too far degenerated, our experience is that the best results are obtained from a glue base consisting of about three-quarters untreated starch and about one-quarter very thin boiling starch. As to whether we ever tried to make wood glue out of this very thin boiling starch alone, at one

time we experimented with very thin boiling corn starch for joint work. It was entirely unsuccessful. So far as I remember, this is our only experience along that line.

As to the amount of glue base made in which the corn starch was used which corn starch was treated by the hydrochloric acid process and which base was unintentionally over-treated, this was somewhat less than ten hundred thousand pounds. Some of that is left on hand today. The In- [fol. 93] ternational Process Company has none of it. The National Process Company had some on hand when I severed my connection with them and when they again start manufacturing they will doubtless use this up.

When I spoke of pasting forty degree thin boiling corn starch and ninety degree thin boiling corn starch, the pasting is a crude description of the method used by the starch manufacturers to describe the fluidity of their products. A paste is made by mixing the starch with water and caustic soda. I do not know the proportions. I have done it myself, but the details are purely empirical and I do not remember them. The method essentially in the solution of the starch in a dilute caustic soda solution the percentage of the starch being five per cent of the amount of caustic soda solution, but whether the proportions we used were the same as those stated, I do not remember.

Recross-examination:

As to whether these substances are known on the market at all as ninety degree fluidity and forty degree fluidity—as to whether if you went to purchase them you could purchase them under those names—those are the common names, as far as I know, by which they are known.

Deposition of Glover M. Birk, a Witness Produced on Behalf of Plaintiff April 9, 1919

I am a chemist, residing in Indianapolis. I know Frank G. Shields as secretary, treasurer and manager of the International Process Company.

As to whether I act as chemist for the International Process Company, well, I am employed by the Napco Cor-

poration, that is who draws my cheque. I do a little chemical work for the International Process Company. In the past I have been doing chemical work for the National Process Company. As to how long I have been doing chemical work for the National Process Company, I started in July, 1917.

I have been testing starch materials which the National Process Company and the International Process Company have been using to make their vegetable wood glue. As to how I test these starch materials, I have not a perfectly standard procedure. I test them in general by simply mixing the starch with water and with caustic solution in what- [fol. 94] ever proportions I think will afford the best test for the particular purpose. I am now referring to the manufactured glue base or to the starches when they reach the factory. In testing the manufactured glue base it is seldom the case that the test shows that the glue itself is not satisfactory, but if that did occur that would be corrected, that is, the material would be run with such an amount of whatever it lacked as would correct the sample to the proper fluidity. As to what kind of material I mean when I say run with sufficient material of the quality it lacked, well, that depends on what is the matter with the material. I mean other starch in general. I would select that other starch with a view to bringing the fluidity of our base to the proper point.

Referring to the time when a considerable quantity of glue base was made, a part of which was treated with hydrochloric acid and this glue base before it reached the customer was acted upon by the acid presumably throughout the intervening time and became over degenerated so that it was not successful or would not work satisfactory and it was taken back and used by mixing it with new glue base in the proportion of about twenty-five per cent, I know that such a material was here at the plant when I came. I have only been told about how it happened to be there. I have a general knowledge of how the glue base is made; that is, during the time that I have been connected with the company.

This glue base material which was unsatisfactory, this hydrochloric acid treated base, was added to the new glue base in the proportion of about twenty-five per cent. There was some under and some over.

Most of the glue base which the National Process Company put out while I have been with them has had this hydrochloric acid treated base mixed with it; pretty near all of it. As to whether they are still mixing this hydrochloric acid treated material with the glue base today, so far as I know, it is not being used right now.

The International Process Company is not manufacuring any glue base at the present moment that I know of.

The National Process Company has been mixing in hydrochloric acid treated material practically up to the present time, so far as it has been manufacturing anything.

As to the composition of the final glue itself which the National Process Company was making with this hydro- [fol. 95] chloric acid treated material therein, assuming that there is twenty-five per cent of the acid treated material there will be about seventy-four per cent of an untreated starch and about one per cent of inorganic matter, which consists largely of sodium carbonate, sodium chloric and, of course, I am leaving out any water that goes with the starch. Most starch has some water in it. I really do not know how the stuff was supposed to be there; I never worried over it a great deal. As to the seventy-four per cent of untreated starch, all of the seventy-four per cent was untreated, as far as I know; it was never treated. It would be principally material that I understood to be tapioca flour and some other material I understood is corn starch. As to what percentage of it is corn starch and what percentage is tapioca flour, well, in this material we have had a standard formula. We vary it according to the results of our tests somewhat. As to whether the corn starch which the National Process Company was putting in was ninety degree fluidity corn starch or forty degree fluidity corn starch, very near all of it was what I understand to be pearl corn starch; not often was it thin boiling corn starch.

Going back again to the unsuccessful base, the hydrochloric acid treated material, I think the International Process Company is not using any of that in its mixture.

I am the chemist who suggested the putting in of soda ash to neutralize the effects of acetic acid fumes which are produced by another process as in proximity to the operation of manufacturing the glue base. I think it was about the first of the year 1919 they started such process which produced acetic acid fumes which might affect the starch.

Cross-examination:

Referring to the fact that when I came to the National Process Company I found there was some material on hand which was subsequently used by mixing with raw starches, as to how that material was used, well, I arbitrarily selected different lots of raw material and threw them into one lot by mixing and at the same time mixing with soda ash. Then these were packed up and allowed to stand for various periods. The purpose of introducing the soda ash was to neutralize the excess acid which remained in the starch so that there should be no more degeneration of the starch; that it should eventually reach a point of stability.

When I said I selected different lots of raw material, I meant the hydrochloric acid treated base we have been talk- [fol. 96] ing about, the material that I found on hand which was too fluid.

As to the water in the starch, well, all starches, I think, contain some water that they take up from the air or get from the solutions. So far as I know, there was not any water added to them. There was no water added to them, that is what I mean.

DEPOSITION OF PRESLEY M. STEWART, A WITNESS PRODUCED ON BEHALF OF PLAINTIFF APRIL 9, 1919

I am foreman at the plant of the Napco Corporation.

The International Process Company is manufacturing in the building owned by the Napco Corporation. I am foreman and have to do with their work. I have to do with their making a vegetable glue material there. Being my position is foreman, it would be considered that I am directing the work in the manufacturing and mixing of it. I know how the material is manufactured and mixed. We have mixing machines in the plant and a formula for mixing different ingredients that is furnished me by the chemistry department, and I mix these materials in the machines according to that formula. As to whether the formula is changed occasionally, yes, it is changed some. I know why it is changed. It is changed, well, there is some slight variations in materials at times. As to what those materials

are that are being mi[illegible]d, well, my information is not specific. The materials are furnished me at the plant by stock numbers and lot numbers, and I use those lot numbers or stock numbers which are incorporated in the formulas and I use those materials according to that formula and by those numbers and lots.

I have been with the firm, I believe, about two years and four months. While I have been there the National Process Company have also been manufacturing in the plant; not in the plant we are in now but under the same management; that is, under the general management of Mr. Shields. I did have something to do with the manufacturing operations of the National Process Company in the same capacity that I am now under the International. The process of manufacturing was pretty much the same. The National Process material which was put out was also a vegetable glue material.

As to whether I ever made any tests on any of the batches of vegetable glue material made up to see how it worked, [fol. 97] well, I have a standard to go by at the plant by which I know whether the finished product was right, whether or not it is uniform. I do not go into exhaustive tests. That standard, it is simply for fluidity and fluidity alone. As to how I found out that fluidity, after a mixture has been run together in the machines I use a caustic solution with so much water, stirring the ingredients together, and on the outcome of that I determine the fluidity. In the test I make I use ninety cubic centimeters of water and about fifty grams of starch material. As to the amount of caustic in the water, well, I have a certain way of making up that solution and that is like this: We use fifty grams of caustic soda and dilute it down to one hundred cubic centimeters of water, and then I use ten cubic centimeters in making the test with that solution. That is, I take fifty grams of caustic soda and add sufficient water to make one hundred cubic centimeters of solution, and I use that as a stock solution, and in making my tests I take fifty grams of starch and add to it ninety centimeters of water and then I add ten centimeters of the caustic solution and stir this up and observe the fluidity of it.

I began working for these people about December, 1916. I do remember of their putting out a vegetable glue material

which had been treated with some acid and which was unsuccessful and they had to take it back. That was while I was with them. As to when they stopped making this material, probably sometime the following summer, maybe in June or July, something like that. I would not want you to take my answer on that as being right, because I am not sure about it. It was some time after I went with him and I would say about the following spring or summer of 1917. As to whether that material which was taken back was used up by mixing it with other material which they made later, some of the material was used that way. That is, they mixed in some of this poor acid treated material in with the new stuff.

Testimony of Dr. William M. Grosvenor, a Witness Called on Behalf of Plaintiff at the Trial October 28, 1919

(After testifying as to his qualifications to testify as an expert in this case, the witness testified as follows:)

Q. Have you read and do you understand the patent in suit, re-issue number 13,436?

[fol. 98] A. I have read the patent and I think I do understand it.

Q. Will you please explain to the court what kind of glue you understand the patent in suit to relate to.

A. A glue made from carbohydrates, such as starch, and having the properties of animal glue for all around wood veneering where extremely strong joints are required. The patent itself states, page one, lines 9 to 13; "My invention relates to improvements in glue and the method of making the same, and more particularly to the manufacture of glue from carbohydrates containing amylo-cellulose or its equivalent." The term "Amylo-cellulose" is the term applied by chemists to the least soluble portion of the starch granules, the outer integument, the skin as it were, and is the more complex and dense, highly built up and organized portion of the starch material. So that this passage clearly indicates that starch was prominent in the mind of the inventor as the particular source from which the glue was to be formed; and the same statement about amylo-cellulose indicates that the starch to be used was an undegenerated

starch; in the same sense that I spoke of building up. The first conception in Mr. Perkins' mind was a starch which, for purposes of specific example, should be taken as a starch containing amylo-cellulose. When I say "undegenerated" I mean a starch which has not been degenerated to the point at which it no longer contains any amylo-cellulose. The denegation of starch I shall have occasion to discuss more in detail in considering later portions of the patent; but at this stage he contemplates, broadly, the basing of his preferred source of material on those starches which still contain some amylo-cellulose material. The old forms of starch paste indicated in line 29 of the patent as not suitable for wood glue were some of them of such a character as to form thick gelatinous masses, which, particularly on cooling, became extremely thick and heavy, and are therefore declared on line 32 to be unsatisfactory for wood work, and on line 34 one reason for this is given, because when such very heavy material is used, it is thinned with water so as to become easily workable, it is necessary to use so much water that the excessive amount of water delays the drying of the veneer and in many cases warps the wood, and in some cases causes the greater body of the glue material to drink into the joint and disappear from effective service between the layers of wood. If the patentee had not pointed that out clearly there might be some [fol. 99] question of that interpretation, but he goes on to say, "If more water is added in an attempt to make it more fluid, the paste become so weak and diluted that it has practically no power and would be wholly unfit for most classes of work, especially wood joint."

The importance and the peculiar applicability of the glue to wood work is borne out all through the specification by reference of that character. The specification goes on to say, page 1 lines 43-60; "various objects of my invention are to provide a glue and a method of making the same from carbohydrates, which will not have the disadvantages just pointed out, but which will be exceptionally tenacious and powerful but still amply fluid for easy application, and which can be economically and easily produced. A further object of my invention is to produce a glue which will have the great practical advantage that it may be practically used for the same purposes as the best animal glue, and

possesses certain great advantages of permanency to weather and temperature variations for superior to those of animal glue, As far as I am aware, such conditions have never been met by any prior adhesive made from a carbohydrate base."

"Carbohydrate" is the generic word by which chemists distinguish those substances made from carbon, hydrogen and oxygen, belonging to the class which contain sugar, starch and dextrin. The phrase "amply fluid for easy application," does not necessarily imply that at all times the material shall be a free flowing liquid; in fact it is not a light free flowing liquid at any time; it is essential to the success of the glue that it be heavy in body and dense, but it must be sufficiently fluid for easy application; in other words, it must have that character of body which permits it to be agitated and stirred up and mixed and then to serve the purposes for which it is to be used in being applied by machinery.

The high grade animal glues again serve to indicate the field to which the invention is addressed, because both hide glues and bone glues are, broadly speaking, divided into upper and lower classes. The higher grades of both are used for purposes requiring strength and elasticity and binding power. The lower grades are used for sizing and filling and agglutinant purposes in holding powdery material together. Therefore that phrase again points to the use of this glue of the patent as a glue for wood work and [fol. 100] veneering purposes, and because the general range of high grade glues, both hide and bone, can be so applied.

Page 1 lines 100 and 101 Perkins speaks of a glue being produced the strength of which when dry is superior to the lateral strength of wood. This description is a somewhat broad one, but I think it is generally recognized that the lateral strength of wood work of the various woods in good, sound conditions, varies between eight hundred and a thousand pounds per square inch; that is, that eight hundred to a thousand pounds per square inch will be required, on the average, to tear the wood side wise, splitting it along the grain, by a pull at right angles to the grain.

This again indicates the thought in the mind of the inventor of the application of the glue to veneers, or to what

are called flat joints and flat work generally, because the mortised joint, tenon joint, holds in part mechanically, and also applies the pull at all sorts of angles to the grain of the wood. It clearly indicates the prominence in the mind of the inventor of the veneering idea.

Page 2 lines 8 to 14 emphasizes the importance of the patentee's glue for veneering again. He says: "My improved glue when made in its best form and properly applied will not only tear away the wood at some point in the wood joint produced by the use of this glue, but will tear away the wood at many points whether with or against the grain." Again indicating the conception of applying the glue to the side of a piece of wood, not so much at the end, because if applied to the end there is no question of pulling way against the grain. If applied to the side of the wood the grain may dip in one direction or the other, and while a very weak adhesive is capable of lifting the ends of those grains in spots and taking up the loose ends of the fiber, it requires a much stronger adhesive to tear away the wood when the split is applied with the grain and the fibers are all lying in the direction in which the split progresses; they do not tend to lift with the split anything like the same degree if the split takes the direction in which the fibers are sloping away from the point of split. The patentee then proceeds to point out that high grade animal glue was used for furniture and veneering, and as a matter of fact, it was substantially the only material used for that class of work up to the time of Perkins' invention. The more recent experience has developed for certain particu- [fol. 101] lar purposes where water-proofness and exposure to weather are a predominant factor to be taken into consideration some materials which are called glues but which are really more in the line of cements made from mineral matter and casein or from lime and blood albumen, which have been used, for instance, in airplane work. I happened to have been in close touch with the development of work along those lines at the Forest Laboratory in Madison, Wisconsin. But while those are popularly called glue, and are applied to wood, the use of those has been brought about by the modern requirements of airplane work, and up to that time it was very small; it involved very great relative delicacy of application, and substantially the only

material used up to the time of P rkins' invention for the gluing of veneers, so far as I can ascertain was animal glue.

Page 3 lines 73 and 74 the inventor distinguishes his glue from the previous unworkable, stiff jellies, on the one hand, or weakly adhesive pastes or muscilages, on the other. On page 4 lines 92 to 108 he again touches upon the question of dilution. "The diluted or adulterated pastes hitherto made from the natural carbohydrates in the manner explained before are unfit for many classes of work and especially wood joint work, since they contain so much water or adulterants that it takes the joint very long to dry, or when they do become dry there is so little binding material left that only a very weak bond is obtained. Thus it is of the greatest importance and value to produce a concentrated glue solution ready for application, which parallels the animal glue solutions now employed industrially, in respect to water contents and physical properties in application and is equal or superior as to strength and permanency."

The points indicated there that will be touched on later are of paralleling the animal glue solutions now industrially employed—of course that phrase again recalls the mind to the great application, if not the chief application of the glues to veneering work—and in respect to water contents, for which veneer purposes the animal glues were used in about 1, 1½ to 2½ parts of water, and when in the hands of thoroughly experienced people in the glue business excellent joints could be made with as high as 3½ parts of water; the general practice, however, being more nearly 2½ for the highest grade glues.

He again points out the importance of his glue for wood joints. In the past as stated the larger portion of the glue, of good grades was consumed in the immense amount of flat work that was done, and it seems quite clear that he referred there specifically to veneering work in his own [fol. 102] mind, and when he states that it is equal or superior as to strength and permanency, he means, I think, substantially equal as to strength and substantially equal or superior as to permanency, all things considered. He says, page 5 lines 15-20 that "Glued up panels have been placed behind a radiator for 18 months without cracking or separating of the glue joint. These features make my

glue especially advantageous for purposes in which other vegetable glues are practically useless."

When he speaks there of "other vegetable glues," he clearly shows what we shall meet again and again in the case: the fact that "vegetable glue" was broadly used long before the time of Perkins in a very loose way to cover all sorts of adhesive and sizing preparations where starch was the base of substitutes for glue in an entirely different way and requiring entirely different functions and properties of the adhesives. It shows that the patent in suit is for a starch glue having substantially the properties of animal glue for furniture veneering. I think that serves to indicate the type of glue to which the patent refers.

Q. I think you covered the question, doctor. You have explained that the glue of the patent in suit is for joining wood veneers in furniture and the like. Will you just briefly state the objects and advantages of veneering, why is it desirable to produce these panels and veneers by gluing up wood layers?

A. I think that that is perhaps scarcely necessary at the present moment, but for the record it may be of value to state it briefly. Three or four great advantages are presented by veneers. The extent to which the modern wood factories use up almost every kind of splints and loose sticks is hardly realized by those who have not been through such factories. The wood which was previously almost entirely waste is now worked into cores and fitted into the work so that it is an enormous conservation of the rapidly disappearing forests. Veneering is a distinct art, not merely in a conservation sense, but in the sense of external appearance and finish of the wood work which it is used to beautify. The thin covering veneers enable us to use relatively minute amounts of various expensive woods and give an exterior appearance of that wood over a very large area; and the increase in the strength of the wood when built up by what is called cross-panelling, that is laying the length of the grain in opposite direction in successive veneers, enables us to make very strong and very thin panels, so that a light board, an eighth of an inch thick, which could ordinarily easily be split with the hands, it is almost [fol. 103] impossible to break. I have here such a panel that is approximately an eighth of an inch, a little over an

eighth of an inch thick, that it is extremely difficult to break, whereas any ordinary wood would split almost instantly, you could twist it apart. The reason for that is that the longitudinal strength of the grain of the wood, that is the fiber in the wood is pulled like a string. That strength is nearly as great as mild steel, whereas the fibers laid together are, as explained before, weakly attached to each other, so that the splitting of those fibers apart is a matter of only approximately 800 to a 1000 pounds to the square inch. The use of veneering, therefore, had already become enormous years ago and is still increasing, and it enables us likewise to make an economy right at the root of the wood working industry, because in the old days when wood was sawed into solid planks it was necessary to discard a great deal of the ends and slabs and cuttings in squaring up the plank. Today an entire log can be put into a veneering machine and turned into a sheet of veneer almost down to the last small central core of the log, so that substantially all the material becomes available without waste and loss at that end, just as in the factory it is possible to take all the cuttings and put those together and cover them with veneers and avoid the loss in the finishing. I have here also a heavier panel which indicates the use of fine finished woods on the heavier chestnut core.

Q. Doctor, just state briefly what was used for gluing together these veneer layers prior to the Perkins invention, if you know.

A. Animal glue.

Q. Are you familiar with the extent to which the Perkins glue of the patent in suit is used today in veneering?

A. In a general way only. I have visited a great many factories and would say that nearly all of the veneering work is done with vegetable glue, but I would not be in a position to say to what percentage or extent.

Q. I think you have already explained sufficiently that animal glue is used for other purposes than veneering; that is for sizing, etc., but I want to ask you to point out what qualities are necessary in and all around veneer glue, for this industry, what those may be termed.

A. In the first place, it is desirable that it be capable of easy preparation by the user. Animal glue has to be soaked for long periods and has to be prepared with ex-

treme care as to the application of heat, if the glue is not [fol. 104] to be injured at all; it must be protected from exposure to air, as far as reasonably possible, during use, because if it is not it skins over, and that skin is not only lost but is in danger of becoming mixed with the glue; so that it is very desirable to have an easy preparation of glue, free from many of those difficulties. The vegetable glue is mixed in a kettle by stirring up with water. We have an iron kettle from two to three feet in diameter and about the same depth, generally, with double walls so that heat can be used in connection with the caustic in bursting or dissolving the glue if it is desired, and the bottom of the kettle is slightly inclined so that it drains well. We meet here the necessity for certain physical properties in the glue while being mixed, because in order to get a homogeneous product we must stir it, and the stirrers being driven by gears, a blade, have got to be capable of smoothly and evenly breaking up the glue batch when made. It should therefore be a glue which can be mixed easily so as to become perfectly homogeneous on stirring, and so that all parts of the work, as the material is drawn from the mixing tank and applied, shall be equally well done. It should be capable of flow during all stages of its preparation, at least a sufficient flow to permit the agitating machinery to cut through it and move it and distribute it. Therefore, if it is extremely rubbery it is objectionable, because it sets up on the stirring machinery and rides around and no effective mixing or stirring is accomplished, and in many cases no stirring at all. I have seen very high viscosity starches in a mixer just sit up and ride around on them, and it is almost impossible to make any adequate agitation of them, or mixing the constituents, because they were so gelatinous and stiff at these high concentrations required to give the necessary body of material in the joint. The tack, as we call it, of the glue becomes important in the mixing kettle, because as the agitators turn the resistance to their agitating action is the grip which the glue takes upon the side of the kettle, on the one hand, the grip that it takes upon the parts of the stirrer, upon the other. A slippery, slimy mass is extremely difficult to mix, because it does not take hold of the side or of the stirrer, and it slips around between like a mass of

oysters or eels. Furthermore the material when mixed should not stiffen or gelatinize so as to become unworkable. All of these materials do stiffen and become very much more solid in consistency on standing, but it will be found that when put into the mixer they stir up again and reassume their smooth even composition. This sample illustrates the extent to which these materials become apparently gelatinous on standing. [fol. 105] The sample is one of Perkins glue made by the acid process and dissolved in about 2½ parts of water to one of dry glue base.

From the mixing machinery the material should have a capacity to be distributed by pipes, or to be flowed in some way so as to be distributed to spreading machinery. It is of course possible to dig out with a shovel, and that has to be done in some cases where people have tried to use a high viscosity raw starch, but it is not a practical proposition for the application of the veneer glue.

So we meet again the question of flow, and it becomes desirable that the material should pass, when being stirred or shortly after being stirred, so as to get it back into workable condition—should pass through pipes under a head of a few feet, and sometimes over a considerable horizontal distance in order to reach the spreading machinery. And again we meet at this point in the operation in question a non-jellifying property; that is, that it does not form the stiff, rubbery, elastic jellies that raw starch is prone to form. When we speak of high viscosity starches, the difficulty there is that it is almost impossible to get some of these materials out of the pipes without taking them apart, and either driving them out or burning them out. Such a material as this, while it is stiff enough to resist the action of gravity in a small mass, nevertheless if it is pressed upon by a head of material behind it, and if it is agitated even by the oscillation of the material in the pipe, it acquires a slow fluidity that enables it to work down from the mixing kettle to the spreader, and in the spreader enables it to work out and distribute itself evenly through the spreading apparatus. From the pipe it has to pass to what I have referred to as the spreader, which generally consists of a horizontal pair of rolls between which the veneers are passed, one roll lying above the other, so that if a volume of glue is applied to both rolls and the veneer is put through

horizontally between the two rolls, both sides of the veneer are spread or covered with the glue, and they may then be laid between two clean unglued pieces of wood to make a three-ply veneer. The spreader is driven by power; the rollers, both top and bottom, are generally corrugated so as to provide a reservoir into which the glue may pass and from which it may be drawn out as the veneer passes between the rolls. A perfectly flat smooth roll would not give a satisfactory distribution or spread of the glue. The upper and lower rolls are generally both provided with reservoirs or troughs in which the glue is held in more or less excess [fol. 106] above that immediately required on the rolls, and from which each of the rolls takes its own supply.

So in the spreader we meet again certain essential properties. The flow must be sufficient to enable the material to work out sidewise through the troughs from the one end to the other, or from the center to both ends, so as to keep the entire length of the rolls evenly supplied with glue. An excess accumulation of the glue on the rolls is prevented by a scraper, or by the scraping action of the edge of the reservoir. The spread is regulated by the tension with which the rolls are brought together in part, and in part is regulated also by the extent to which this scraper or edge of the trough is brought near to the surface of the roll. The viscosity of the glue becomes extremely important when we get to the spreader, because if it has not a high viscosity the glue is apt to slop and flow down over the rolls, and it does not stay in the grooves until the grooves are brought in contact with the wood, and is not then regulated systematically and evenly distributed over the surface of the wood. Also the tack that we have referred to before, that is the power of the material to take hold of the surface or contact with it, what one would be tempted to call "stickiness"—the tack is very essential in the spreader, because the material must take hold of the rolls and drag down evenly with the rolls as they pass below the spreader, on the one hand, and on the other hand it must take hold instantly of the surface of the veneers when it is brought in contact with them, or else the grooves cannot perform their function and deliver up the material, or a considerable portion of their contents to the surface of the veneer. The homogeneity of the material becomes important in the

spreader, because a non-homogeneous material permits clots or accumulations of extraneous matter to gather at various points on the scraper, and in consequence of piling up in the way of the glue, prevents an equal distribution of the glue on the veneer and an equal reliability of joint.

We then reach the veneer itself as it passes between the rolls of the spreader, and the tack becomes necessary to let the glue take hold of the veneer. Homogeneity and evenness of texture become important, because we do not want large clots or too viscous a mass of glue to gather in one spot or another in the veneer to make irregularities when the veneers are pressed. We do not want even finely suspended matter to be gathered in the pores of the wood while the glue is being applied; therefore we find extremely [fol. 107] objectionable, as a rule, the pasty character of the material which when examined by the microscope shows an assemblage of unbursted starch granules or only partially dissolved starch material containing particles from the outside of the grains that will prevent the penetration of the glue perhaps into the pores. I have here an illustration, a micro-photograph of such a pasty material, showing the accumulation of refuse left over from the incomplete solution of the starch granules, and that is the kind of material that is capable of covering over the ends of the pores or openings into the wood, and to a very large extent preventing the proper penetration of the glue. The flow, in the broad sense, of the glue is essential in getting it onto the veneers, because each one of the little grooves on the roller of the spreader carries its charge of glue with which it is filled; as the roller comes over, and this groove is placed down upon the veneer, the tack of the glue makes it take hold of the surface of the veneer as the roller passes along and the glue is again withdrawn. The material must have sufficient flow for a considerable portion of it to quickly leave that groove and stay with the veneer, or else there will not be a sufficient supply of glue on the veneer to make a satisfactory joint.

The viscosity of the glue is again a matter of importance, because if the glue is to remain in the joint and is not to drink up into the wood work, on the one hand, or squeeze out and slop all over the workman around the edges of the veneer on the other hand, it must have sufficient vis-

cosity or resistance to flow under a given pressure to keep it at its work, keep it where it belongs. The penetration of the glue should be for that reason medium; in other words, it should not drink too deeply into the wood work on the one hand, but it is obvious that it must get into the pores under the pressure to which the veneer is subjected in closing up, sufficiently to take root and anchor itself in the interior interstices of the wood. It must also have spreadibility, in the sense of distributing itself smoothly and evenly over the veneer when the pressure is applied in order to successfully cover a large footage, a desired economical proposition. After the glue is placed upon the veneer and during the process of laying up and subsequent compression or squeezing together of the flexible veneers during the period that they are clamped to dry, and after they are unlocked and finished, certain of those same qualities appear again as important, and certain others as very much more important. The reasonable homogeneity of [fol. 108] the material becomes important, because as we close up the veneer we want both wood surfaces to behave as nearly as possible as though they were true plane and coming in intimate contact with each other. Anything that prevents that tends to weaken the joint as well as mar the surface of the wood, and later when the wood is finished, because of the fine spot in the veneer, it leaves an imperfection in the surface. Also viscosity is of importance in causing the veneers (during the period when they are being shaped if for any reason it is necessary to open the clamps), to hold together until pressure can be reapplied. A liquid of low viscosity would allow the plates to spring apart. The higher viscosity material is found in practice, in small mills, to take the place of clamping over a brief period while other material is being put into the clamp.

The very important question of low water content has been discussed, and it has been stated how important it is for quick drying and for non-warping of the stock.

The caustic content is also of interest, because it helps to give the quick wetting quality which is essential to tack. Anything which does not wet the entire surface has no tack on that surface. The caustic makes a glue which has a better tack than glue which is without the caustic. It also helps to attack the lignite cellulose of the wood and

makes a very much better bond of the wood material. The hydroscopic properties of the glue when dry becomes of importance, because in variations of whether it is undesirable to have the glue take up too much moisture on the one hand, or give up so much moisture on the other as to become brittle. Most of us are familiar with what happens to furniture glued up with hot glue when it is exposed for a considerable period to excessively dry conditions, such as we find in modern apartments; and on the other hand most of us have heard of the action of tropical climates on built-up stock when it is exposed to a high temperature, a high humidity over long periods. Elasticity of the dry material is of very great importance, because in order to hold properly any two things together there must be some yielding quality involved. If a joint is too rigid it becomes susceptible to breakage by shock or any sudden stroke; and the warping and swelling and shrinking and expansion and contraction, with heat and cold, all require a certain amount of elasticity in the dried material. As we shall see later, those materials which have too great a shrinkage find their elasticity insufficient to withstand a strain and they [fol. 109] break themselves into small pieces. The actual tensile strength of the material must of course be high enough that the dry glue in the joint shall be capable of amply holding itself together in order to hold the faces to which it is attached together. Because it may contain air bubbles or impurities, there should be a factor of safety over and above anything we expect to apply to the joint. In the same way the general joint strength is of vital importance, because after all the job of the glue is to hold the wood more strongly together than the wood itself would hold. We can never apply a glue as perfectly as the wood itself is joined—unless it has been injured—so that we must apply what we do get on in such a way as to have a factor of safety to allow for the imperfections in application. So that the actual general joint strength of the glue when applied in the joint should be greater than the what we call the lateral strength of the wood. These, it seems to me, are the essential properties, and some of the very desirable properties that are called for in veneer glue.

(Court here took a recess until 1:30 P. M.)

Afternoon's Proceedings

Doctor WILLIAM M. GROSVENOR again on the stand.

Direct examination resumed by Mr. Crosby:

Q. Doctor, in your last answer you have mentioned qualities which are necessary in glue for all around veneer work, and you mentioned briefly the water content of glue. I wish you would point out a little more clearly why this low water content is requisite for veneer glue.

A. The low water content is requisite because, in the first place, a material which would be capable of satisfactory flow with a large quantity of water would almost certainly not give sufficient body of dry material in the joint. The question is always one of the two horns of a dilemma; if we take a truly raw high viscosity starch and we wish to make that fluid enough to be workable and penetrate, we are then compelled to add so much water to it that it makes the soaked joint, of which I have spoken, in the sense that most of the dry material in the solution is sucked away into the wood; it makes a material which is too highly contractive in the sense that a given volume of the paste or jelly [fol. 110] left in the joint shrinks down to substantially nothing on drying. It likewise makes a material, which, in my experience, is invariably weak mechanically. If on the other hand we do not use that amount of water we get a material which is unworkable and gelatinous both mechanically and in its penetration of the wood. Because of lack of penetration it, in many cases at least, lacks tack, it does not take hold of the wood, and when the joints are separated the scale of glue comes away sometimes wholly intact from one side of the joint. It is therefore of vital importance to reduce the amount of water, because we must have enough of the volume that we put into the joint dry residual material to fill up the irregularities and to give the constructive material required to build a joint. It might seem, at first sight, that the omission of that water was obvious in view of our knowledge today, but it is no more or less serious a change in the practical result than the quarter of a turn that Alexander Graham Bell gave to the telephone screw

that made it operative; it works. You may say—and I would expect perhaps—that we could simply cut down the water in the ordinary mixture of starch and water. When we do that it becomes necessary to get something different from just ordinary starch—any starch, because if that is done the changes are extremely large that no satisfactory result will be obtained. In my own experience, on the one hand, I inspected very carefully the results at Poplar Bluff and found that there they were using four parts of water; a great many of the barrel heads were tested and the joint obtained was of such a character that you could pick up the barrel heads and with very little force peel them apart, much as you could take the skin off a banana. All that was done was to just hold them together enough to let them go through the clamping and turning operation between the two clamps and stack them up until they were put in the chimes of the barrel that would hold them in place. On the other hand, I have tested a great many of the preparations containing a good deal of water that have been brought to my attention in the last nine years, and invariably if the material is placed in a joint and the joint squeezed up and a test made of what it actually will do, there has been not enough material there to make a joint; they will break anywhere from three, four, five and six hundred pounds up to eight or nine hundred, always too low for this class of work. Now, on the other hand, if you go and take ordinary untreated, unprocessed starches as you find them on the market and make no effort to select those which have [fol. 111] low water absorptive properties, you get masses that cannot be used, that are not workable, and in many cases have mechanical disadvantages, as well as compelling you to use so much water if you want them to flow that you ruin the veneer work. Does that cover the ground?

Q. Yes. Doctor, I wish you would now explain how the Perkins glue is made, that is going into it a little more in detail, as described and covered by the Perkins patent in suit.

A. It is made by taking a vegetable material, a suitable carbohydrate like starch, selected or prepared so that it shall not have too great water absorptive properties and putting it into solution with a small amount of water, by acting on it with a chemical like caustic soda which acts in

the water solution as a solvent of the starch, particularly a solvent of the cellulose of the starch.

According to the specifications the method of making the glue may be varied considerably, although in all cases the same fundamental principles are involved. The patent points out, page 3 lines 80 to 83 that certain grades of untreated cassava carbohydrates and other starches may be used without any preliminary treatment thereof. It would be perfectly obvious to a starch chemist, after Perkins point out that starch of low water absorptiveness is desired, that many raw starches, more or less in the natural condition, can be used, but he points it out specifically. He found the difficulty, however, of specifically illustrating the proper choice of raw grades, and in order to make that a little more clear permit me to touch for just a moment upon the chemical constitution of starch. As we all know, modern science enables us to identify, by reaction, portions of the human body, blood serums for instance, in such a way that it is believed even individual parentage can be determined; certainly racial differences and family differences, and in many cases individual differences, but they believe it has gone so far that it becomes personal. Similarly starch shares the same sort of complexity. The reason for that is believed to be because there are so many atoms in the molecule of the organic materials that enter into the body, so many atoms in the molecule of starch likewise, that no two are precisely alike, and that the individual differences impress themselves upon the chemical compound. There is in organic chemistry what we know as sterioisomerism. Isomers are bodies having the same composition, so far as number of atoms in the molecule go, but having a different arrangement, that is they are connected in a different way, [fol. 112] and sterio-isomers are those which may not necessarily be connected in a different order, but are differently arranged in space, so that instead of the chain being in one direction it goes off in another, and we find quite radical differences in many of the physical properties of such sterio-isomers, which are the same in every respect except their arrangement. In order to make a little more clear the complexity of the starch granule I have drawn a diagram representing with C the carbon atoms, H the hydrogen atoms and O the oxygen atoms that enter into the molecule of

starch. The portion of the diagram numbered I represents, according to our ideas today, substantially the construction of the simplest possible unit of a starch molecule or a starch particle. It represents, let us say, the ultra-soluble starch, which is so soluble that it behaves like a crystalloid body, will diffuse through membranes. If apparently has no colloidal or clotting character whatever; and as you will see there are six separate series of chains connected together in a sort of ring formation. At one end of each chain there is an oxygen atom, and that renders the two ends of the chain unlike in their composition. There are, therefore, five positions in each chain which bear a different relation to the general makeup of the molecule. That is what we would call isomerism. If we had the same thing substituted at each place we would have five different isomers. Paying no attention for the moment to the sterio-isomers that are possible, when we think that attached to that chain, as we come to ordinary soluble starch, perhaps extremely soluble starch, there is one side chain hitched on to that nucleus as indicated in the small sketch number 2; that as we proceed in the direction of greatly modified starch, we conceive that there are at least two chains hitched on, and the less degenerated starch 3, and the wholly undegenerated starch 4. Unquestionably much of this pictured presentation is only approximate, but it does serve to convey, in a general way, what chemists today believe with regard to the complexity of the starch molecule, and it serves to show that if you have five or six different places on each side where you can put in one of those chains and you put in two chains, you have many times five different possibilities; if you put in three the number increases; if you put in four (recollecting that it makes a difference in the physical properties of your product whether you put them in next to each other or opposite to each other, whether there are two adjacent and one separate, or whether they are all three side by side) why then you add to that complexity which, when we come to wholly raw [fol. 113] starch amounts to some 125,000 possible varieties, if I recollect correctly. When you add to that the possibilities of sterio-isomerism, and recollect that you get different products when you change the position in space of these side chains on the one hand, or portions of the nucleus on

the other, it is possible to understand why anyone familiar with starch would hesitate to make any effort to identify by description the particular degree of degeneration unless he knew something about what he started with.

Mr. Crosby: If your Honor please, it is substantially two o'clock and if it is agreeable to the Court we might make the visit to the factory at this time (Court here took a recess).

Q. Doctor, I will now ask you to kindly go on with your answer in explaining how this glue is made under the patent in suit.

A. We were considering the complexity of starch, and that is mentioned only as a guide in general consideration, not because we are going into it in detail. It lead Professor Reichert, after years of research for the Carnegie Foundation to say that "each and every form of protoplasm extant in any organism is sterio-isomerically peculiarly modified in specific relation to that organism."

So that Perkins faced a great difficulty in telling which starch to select. The degeneration of starch consists in the splitting off of these side chains, as we conceive it, and when we break it down into dextrin it consists in the breaking up of that nucleus and when we break it down into dextrose or sugar we complete the breaking up of that nucleus into the single sides that go to form it. Perkins in order to explain just the condition of the starch he desired to use gives us a specific sample the taking of relatively high viscosity starches, or starches of high water absorptive power and degenerating them to the right point by a chemical treatment. He prefers to start with raw starches. Page 3, lines 60 to 74:

"As previously stated, when ordinary starch is heated with water, it absorbs enormous quantities of water, and if only two or three parts of water are used becomes of a stiff jelly-like form which must be very much diluted before it will be practically workable. I find, however, that using my improved glue base," etc.

[fol. 114] The first part of that phrase clearly indicates the character of starch with which he proposed to start;

indicates what he had in mind as starches that were available on the market. He identifies his preferred example of starch in this manner, and frequently at other points, as being a high viscosity material from which he wished to start to make his glue base. At the same time, as indicated, he clearly points out that once the character of base is known by carrying out that process he may take raw starches as he finds them in the light of that knowledge. The condition of the starch having been ascertained the starch chemist would be able to select, by comparing therewith various starches as found on the market, which would be suitable. But to secure uniformity the only way to learn as to what is desirable, and the only way to be sure of always getting the same thing, in the lack of experience, would be to take something which was too high in viscosity and work it down to a definitely described point. Perkins therefore says, page 1 line 69:

"To do this I first take a carbohydrate of the proper kind, and treat it with a reagent to decrease its water absorptive properties in the sense that to render fluid the finish glue comparatively little water will have to be added and the final glue will not thereby become seriously diluted. The reagent I use I call starch converting agent"—

That is, a reagent which will convert this complex thing in to something more reliable and standard.

"—because it is believed it exercises, at least in part, a hydrolizing or oxidizing or converting action similar to that of the well-known starch converting agents, many of which have been used to convert starch into soluble starch and dextrin. I may use any suitable starch converting agent but the action I produce is preferably much less complete since it is not my object to convert the starch wholly but only to effect its physical properties when put into solution or dissolved to form glue. The effect of this treatment is also that it decreases the viscosity of the glue produced with a given amount of water without detriment to its 'tack,' quick adhesive properties and cohesion. As a base I prefer to use the starch secreted by the cassava plant, which has peculiar properties and advantages for this purpose. After being treated as above, the dried material may

be mixed with a small amount of water and with a solvent [fol. 115] of amylo-cellulose, such as caustic alkali, and a glue produced the stregnth of which when dry is superior to the lateral strength of wood fiber. The prepared glue is very stable in its physical condition, so much so that it may be kept for days or even weeks after it has been mixed for application without fermentative change. By my process in its preferred form the glue is free from the complications which attend the use of an adhesive which must be cooked or warmed before use, or kept warm during use, and is more powerful than that which results from the treatment of starch in other ways."

He gives also 2 lines 18 to 51, a specific example of how starch may be artificially degenerated with sulphuric acid. He further points out, page 2 line 41 particularly, that great care must be exercised not to convert the starch too far into soluable starch or into dextrin. Lines 48 and 49 page 2, he states that he uses only the suspended matter, thereby clearly showing that he does not plan to make either dextrin or sugars.

According to Perkin's preferred method, after the starch is thus degenerated with chemicals, it is cooled, drained and dried, when it is ready to be dissolved by the Perkins last step to make the finished glue. This is explained in lines 69 to 72 of page 2.

To aid in recognition of suitable starches degenerated to a suitable low water absorptiveness to make his glue, Perkins points out several tests. On page 4 lines 64 to 74 he says:

"Consequently, I believe that to obtain the best results it is necessary to abstain from reducing the cellulose to true soluble starch, and that sufficient cellulose must be left to make the glue amply tenacious."

He goes on to say:

"Therefore the action of the acid and alkali should not be carried so far nor the temperature be so high as to destroy all the cellulose and impair its strength by changing it into soluable starch and the starch into sugar or dextrin."

On page 4 lines 34 to 39 there is also an indication:

"The carbohydrate glue base in the preferred form retains substantially unchanged the size and general form of particle as viewed under the microscope when treated with [fol. 116] cold water, and produces opalescent cloudy solutions with water at 200 degrees F."

This again is a warning against the production of soluable starch in following his preferred method. Page 3, lines 85 to 89 he refers to the use of a starch whose water absorptiveness is reduced to prevent it from becoming jelly-like and tough when afterwards treating it with cold water or alkali. Page 4 lines 74 to 81 he says:

"I have found that a good glue is produced by treating the base with the chemicals to reduce the water absorbing power to a point where the base if mixed from 2 to 3 parts of water and subjected to heat of 170° F. would result in a syrupy condition instead of a thick jelly-like mass."

And he further says, page 4 line 81 to 85:

"I find that by such suitable treatment under my process it is possible to produce from the base long filaments having a strength similar to threads of animal glue."

He gives information, therefore, as to what base to select or, on the other hand, where to stop in the degeneration of the high water absorptive bases. When however, pursuing his specific recommendation to start with the high water absorptive base of the cassava plant, and degenerate it by treatment with acid, he gives a specific 9 to 1 boil-up test, beginning on line 127 at the bottom of page 3, and describes the viscosimeter which is to be used in ascertaining just when to stop the treatment. There are many statements in the patent which not only indicate how for the starch should be degenerated if a preliminary treatment is necessary, but these tests indicate what kind of starches require no such preliminary degenerating treatment (because they are already in a condition where their water absorptiveness has been reduced to the necessary degree, and they may have been formed in that condition) and may therefore be selected for use without preliminary treatment. Obviously the selection of the starch already suit-

ably reduced in water absorptiveness is equivalent to the preparatory treatment. A skilled operator may work in either way. The novice would be expected to follow the specific example to ascertain the result there produced before trying to select an equivalent. A skilled operator may, [fol. 117] as the inventor has carefully pointed out, select raw starches for use. This last step of Perkins' preferred process, putting the glue base into solution, he states, lines 95 to 100 of page 1, consist of mixing the dry base of low water absorptiveness with a small amount of water and a solvent of amylo-cellulose." Others have dissolved starch with caustic, but never with so little water and never in a way to produce a glue for the wood working industry. On page 2 line 122 is again a specific example of making the glue from a suitable starch base, using preferably 2¼ parts of water, 10% caustic soda added in the form of a solution.

The appearances to be looked for during the mixture are descriged in detail, and that will be found on page 3 lines 10 to 36, beginning,

"During the earlier stages of the addition of the caustic in the above example"——

indicating that when about half the caustic is added minute mottled effects appear on the surface, and that other portions present the appearance of the original mixture, and the entire mass finally passes over or "comes across," being converted from a mixture of suspended starch and water containing caustic to a homogeneous colloidal compound of starch, caustic and water. This results in the substantially homogeneous colloidal compound, which is the final viscous semi-fluid glue of the Perkins patent containing about three parts or less water and having substantially the properties of *na*imal glue for joining wood veneers. He points out that if heat is used less caustic may be used. Page 3 line 99 to 108:

"The alkali added acts, I believe, to dissolve more or less of the cellulose and carbohydrate, uniting with the same and with the water and forming a glue of very tenacious properties. The dry carbohydrate is mixed with the water with a carefully regulated heat, if any. The action of heat replaces the action of a portion of the caustic in transforming the glue base, as explained above."

On page 3 lines 48 to 49 he gives another statement with regard to temperature, that it is found that it affects the amount of caustic required to produce the result, and it is believed that as temperature affects the polymerizing or uniting power of the starch molecules, one with another, so it affects the ability of a smaller quantity *to* caustic to satisfy or bring across a given quantity of starch. It is [fol. 118] found that at successively increasing temperatures one is enabled to bring across the mixture with successively decreasing proportions of caustic.

The amounts of water indicated here are substantially parallel to the amounts of water used with grades of animal glue adapted for similar work; and while we speak of animal glue it is to be noted that not only are different grades of glue selected for the sizing and finishing industries and different amounts of water there used, but the entire desired technical effect of the glue is a different one, is applied differently, it has a different purpose, and that fact is brought out clearly in a multitude of starch preparations which have so largely replaced it. When we actually examine those preparations and see how they behave; when we make them up and see them, they bear no physical resemblance as a rule to the strong solutions of animal glue that are used for veneering purposes, but they do bear an intimate relation to the thin watery solutions of the lower grade glues. The high grade glues take up more water to make a thin solution, and in sizing work put on relatively little dry material. High viscosity raw starches cannot be used with a small amount of water without in some way reducing their water absorptiveness, because otherwise they would behave in a way to produce expanded, stiff gelatinous products. Perkins says, page 3, lines 90 to 98:

"In the second part of my improved process, less than about 3 parts of water by weight to 1 part of the dry material are used and after adding the solvent it is found that even with such amount of water the batch will assume a semi-fluid consistency much superior to that ordinarily obtained by the use of water alone, and will not become jelly-like and tough as in former processes."

And on page 4 lines 87 to 93 he says:

"Practically all the water must be later removed that goes into the glue solution and is applied to the joints, hence an increase of water in the glue solution involves changes in drying methods, or in drying time, or in risks of injury to the material due to working by the extra water, all of very serious consequence."

An as I have pointed out it also involves the risk of too little dry material to make a joint, and the risk of the [fol. 119] absorption of too much of the material into the back part of the wood.

At the beginning of page 5 Perkins distinguishes his glue from mucilages, sizes and pastes. They are in a different class both as to physical properties and composition, and lack the requirements for producing strong joints on the wood. Perkins points out the qualities by which the perferred type of this product may be recognized; page 4 lines 113 to 127.

"In the preferred form described my improved glue is transparent and free from oder, and is very stable after mixing for use, it is instantly adhesive to clean surfaces, its cohesion is very great but not sufficient to overcome its adhesion and its viscosity is lasting and low enough to permit ready application, but so proportioned to its cohesion that it is capable of being applied by machinery like hide glue, but still very long tough fibers are produced if freshly joined surfaces are separated. I have found that, owing to the breakage of these filaments, quick separation of such surfaces produces a crackle like electric sparks."

Here Perkins brings out the importance of a glue applicable by machinery, against suggesting wood veneers. He points out the cause of the tenacious properties of his glue on page 4 lines 48 to 64:

"I believe that the cause of the tenacious properties when carbohydrates are treated with water and a strong solution of an alkali may be traced to the proper proportioning of viscosity, cohesion and adhesion, together with the peculiar chemical action which caustic loosely combined

or free in the glue as applied, exerts on the cellulose which it in turn combines with, in making the joint to form alkali metal carbonate, bicarbonate and acetate. I believe this proper proportioning is due to the partial change of the integument and the proper proportioning of the amylocellulose and the granulose (or the proper mean polymerization) when united with the caustic and water."

However, Perkins realized it was not necessary to use any preliminary first step degeneration treatment with many starches, because some starches already come on the market with their water absorptive properties sufficiently reduced. He points this out on page 3 lines 78 to 83:

[fol. 120] "Thus, by proper adjustment of conditions of mixing I am able to produce this glue even with certain grades of untreated cassava carbohydrates and with other starches and conversion products."

Since at the time of Perkins' application there were various starches on the market that required no preliminary treatment, in spite of that, it is nevertheless true that many of them did require treatment and they did not run particularly uniform. It was preferable, therefore, as pointed out, to use starches of high viscosity and degenerate them. In recent years the supply of starches on the market, the water absorptive properties of which are already reduced, is very much greater; they are more plentiful, and they are being marketed in far more uniform condition; therefore the necessity for preliminary treatment has, to a very great extent, disappeared.

The essence of the process technically consists in first selecting or producing, either by intermixture or chemical treatment, fermentation or otherwise, a starch of suitably low water absorptive properties, and then dissolving it with about three parts of water or less and caustic soda to produce the homogeneous, viscous and fluid glue having substantially the properties of animal glue for veneering.

Q. Doctor, are you familiar with the method employed commercially by the plaintiff, the Perkins Glue Company, in preparing their starch glue base for the market.

A. I am.

Q. Will you please briefly compare that particular method with the particular first step, the acid treatment, described in the patent in suit.

A. In this patent sulphuric acid is the agent suggested. In the use of sulphuric acid there is a tendency towards the production of corrision products, I might call them, of the starch, which causes some loss in the wash water. Also it is necessary to use heat, which is an inconvenience. The use of alkali in the degeneration of starch has certain commercial advantages, the two greatest of which are the fact that it operates cold, and the fact that its action is not so apt to run away or prove excessive locally. The difference in the result is not important. Either process carried out as described in the two patents—and I have carried them both out a number of times on a large scale and on a small scale—produces an entirely satisfactory glue.

[fol. 121] Q. I do not think the Court understands what you mean by the "Two patents," I don't think the Court is informed as to the other patent.

A. I beg your pardon. The other patent referred to was the patent of the same original issue date as this one reissue 13,436; its number is 1,020,656; its date of issue was March 19, 1912. In that patent a small percentage of alkali and a small amount of peroxide of sodium, both of them recognized starch degenerating agents, are used in water to act on high viscosity raw starches, just as in the patent in suit sulphuric acid is used to act on the suspended high viscosity starch. Neither of them is intended to put the starch into solution; the acid has a tendency to do it by accident; the alkali is better than the acid in that respect. What further comparison may be necessary I can't altogether judge. The point is that the patent in suit is generic and includes other methods of producing degeneration, whether they by fermentation or otherwise, because the patent says, page 1 line 82:

"I may use any suitable starch converting agent."

And on page 3 line 80 he refers to other starch products from the cassava plant. He also refers again to other starches and conversion products, starchy carbohydrates. The fact that fermentation or disease of the plant, or the

modification that may be brought about in the plant by continued cultivation, is a means of altering the condition of the starch, all fall within that, because the references are to certain starches which were then available. The passage just preceding the one read again says that he may use "certain grades of untreated cassava carbohydrate." It is, therefore, clear not merely from this patent, but from its companion patent, that the method of securing the base was regarded as immaterial by Perkins. It is clear also that he included other starches, starches degenerated by other means or not, so far as special artificial human aid is concerned, degenerated at all. It is only necessary that the water absorptive property or the viscosity of the starch be reduced to that point where when dissolved with caustic soda in about three parts or less by weight of water it will produce the glue having substantially the flowing and spreading and adhesive and cohesive properties of animal glue for regular wood veneering.

Q. I don't think it was made quite clear—you spoke of this patent 1,020,656, and the process of that patent by which the starch was put into the proper form by an alkali [fol. 122] treatment. Do you mean to infer that that was the process which the Perkins Glue Company use?

A. Is commercially using today and has used almost continuously since it was discovered.

Q. Doctor, you have stated that the glue of the Perkins patent has substantially the properties of animal glue for veneering. What method of examination may be used to determine whether any glue or adhesive has such properties?

A. We use a number of tests for various properties or combinations of them. The most general test is what we call the "block test," in which a series of blocks of wood are glued to gether end to end, are allowed to set under a weight approximately 100 pounds to the square inch, and are then sliced up in smaller blocks, slicing with the grain so as to secure a number of joined end faces, and are [illegible] seasoned and broken. The strength [illegible] glue tested in that way varies with the good grades of animal glue from about 1,300 to 2,200 pounds per square inch; occasionally we get blocks that go very much higher. Tested in the same way Perkins glue varies

from 1,500 pounds up; occasionally, again, we get some that go very much higher. The general description of the test is referred to in the publication "Glue" the issue of November 1910, and some modifications have been found necessary in order to give the weaker adhesives, like sizes and pastes, any chance whatever to show a test for strength and get some sort of comparison between them. The method of applying the Perkins glue for making such a joint would normally be to spread it on. If we did that with the diluted adhesives or sizes we would get no testable result. So that in making these tests we have in the past given the weaker adhesives every possible advantage by allowing the end of the block to soak in the adhesive in a shallow layer below it for an hour before bringing the surface together. That is the main deviation in principle from the test described in "Glue." And I have here a sample, one of those sets of blocks after they were broken. (Witness handing an exhibit to the Court.)

The next test is one that has been recently strongly advocated for the accurate judgment of all glues, but one which we have been using for a number of years—the test of the actual cohesive strength of the material itself. To do this we make a film of glue and test the strength of the glue itself by pulling the film apart. The results obtained in that way for animal glue vary from 3,000 to as high as 17,000 pounds per square inch; in other words, it is as [fol. 123] strong as cast iron. And the Perkins glues give figures running about 8,000 pounds; both of them amply in excess of anything that is likely to be required in a wood joint. The strength of the glue itself in this art, in my opinion, ought to be at least 3,000 pounds per square inch in order to stand the strain in ordinary uses of the veneer.

The Court: Just how is that done?

A. A piece of this film is taken and clamped between cushion jaws so as to prevent the crushing of the film itself, and it is then pulled until it snaps; we keep on pulling them until we get a clean break which is nowhere near the jaw, showing we have broken the thing in the middle, and not broken it owing to some faulty method of clamping or twisting. The thickness and the width of the film is measured, the weight required to break it is known,

and we calculate the strength per square inch—the tensile strength of the material per square inch, the figures running for Perkins glue, as I say, in the neighborhood of 8,000 pounds.

The Court: You mean by that, that instead of one of these films you would have a square inch of glue; if you did that it would take 8,000 pounds——

A. It would take 8,000 pounds to pull it apart. The difficulty of producing such a solid square inch of glue is the extreme delay in drying, when it is dried slowly enough to be dried evenly throughout. So we dry these films and calculate therefrom the te-sile strength of the material itself; just as in testing a steel beam, they do not undertake to pull the entire beam apart, but they cut a piece out and turn it down to a small neck between two heads which they can grip, and then they break it by pulling that neck apart, and calculate therefrom the tensile strength of the steel per square inch, and the tensile strength of the whole rod or beam. Other properties enter in. One of them which we do not test quanti-tively but which we examine, is the elasticity of the film. Some of these dry adhesives are so brittle that they will not stand any bending or straining of any kind. The glues do stand such a strain. Where they have been cracked on the margin from cutting the strips they frequently break very much more easily, but a certain amount of elasticity is essential to the good working of the glue, because the wood expands and contracts with changes of humidity and temperature, not in exactly the same degree that the glue does, and under stress; the stress in the material produced by the strains of usage makes deformations to which the elasticity of the glue must enable it to conform to a certan [fol. 124] extent. A glue should not have excessive contraction in drying, that we have referred to, and in spreading the films for making the small section of film for taking the tensile strength of the material itself, we observe the character of the film as it is spread. That spreading is done on a piece of plate glass with a straight edge, the glass having been first coated with a minute film of wax to prevent this material from adhering to it, because if we did not do that we would be liable to pull the glass to

pieces in spots. This material has the same faculty of pulling out pieces of a glass plate that good glues and gelatin have. This film when spread very often shows a tendency to contract excessively from the margin, to pull itself in or to thin itself down in the center and open up spots which are not covered by glue at all that is the contractility of it in the liquid condition, and is not altogether desirable, though not as undesirable as the extreme contractility in drying. During drying these materials that contract excessively submit themselves to internal strains, they dry irregularly. So that we meet in the glues the condition of strain which occasionally leads to the breaking up of the material itself. That is peculiarly the case with the sizing and finishing glues made from highly degenerated starches; it is peculiarly the case with certain of the pastes. I have seen many of these that would pull themselves to pieces so completely that there wasn't a particle on the whole slab of glass bigger than a dime, the large majority of them very much smaller. The material in drying over-contracted and simply tore itself to pieces with its own strength. The other materials break up along different lines, twist and contort themselves, curl up in a very peculiar tangled way, and these things we observe, and we judge by that that the material is likely to overstrain itself in actual use in trying to stick things together. That enables us to judge whether it is fit for use as a glue. We are confirmed in that belief by repeatedly having seen some of these materials that over-contracted in drying the film, when they were placed between blocks and the blocks glued together and allowed to dry. During the drying process I have seen the blocks jump apart without any strain, showing that the material had over-contracted, just as we find that glass sometimes in cooling contracts and snaps because it is not properly tempered. Four other intimately connected properties we try to make some test or observation of: one is penetration, another spreadibility, another viscosity, and then fluidity or practical flow, the general flow of the material. The penetration we generally examine on wood by seeing to what extent the body of the glue has gone into the interstices of the [fol. 125] wood. It is very easy to stain it so it can be separated from the wood miscroscopically. By looking at

the joined faces we can readily determine the degree and to some extent the character of the penetration of the glue into the wood, taking of course for observation a section at right angles to the faces of the joint and observing the side of the channel of penetration into which the glue has forced itself under compression.

The spreadibility is generally determined partly by watching its behavior on a spreader, if that is available, or by observing its behavior on the hand, and to some extent its behavior in spreading on plates, its smooth consistency in spreading.

The viscosity is measured by a special instrument designed for that purpose, and into the details of which I think we need not go.

Then the fluidity is determined partly by observation of the movement of masses, and partly by the approximate estimate of the amount of force necessary to break up that incipient tendency to clot or solidify. The practical flow of the material is not its flow under very minute pressures, but its flow under pressures such as are practically applied in moving the stuff from one place to another through pipes or in distributing it on a spreader.

The water content is important, but is generally known, but if not is determined by analysis.

The glue should be free from aggregate suspended matters (the clotty material in the case of starch glues left over from the incomplete breaking down of the starch) because they help to plug up the pores of the wood; they prevent penetration, they give it a false viscosity, and they leave in the joint solid material which is of practically no use, whereas the extra-fluid part absorbed into the wood does not do us any good.

Alkali is of some importance in its action on some of the constituents of the wood and in making the glue a wetting glue, but that is generally known or can be determined by analysis.

These various tests and observations taken separately serve to indicate the reasons why a glue fails; or taken together with the actual practical trial of the matter at the factory they serve to show conclusively whether any glue or adhesive has the necessary properties of glue for all round veneering work.

Q. Doctor, in your last answer you mentioned the strength of animal glue on the block test as running, I think you said, [fol. 126] with a good grade 1300 to 2200 pounds per square inch. About what would be the results in a block test of the Perkins glue made under the patent in suit.

A. Around 1500 and upward.

Q. Have you recently examined the gluing operations being carried out by the defendant the West Michigan Furniture Company, and obtained samples of the glue and glue base used there?

A. I have.

Q. The defendants, West Michigan Furniture Company and George P. Hummer, in answer to interrogatories have admitted that prior to the filing of bill of complaint the defendants made vegetable glue by dissolving vegetable glue material not purchased from the plaintiff with about 2½ parts of water and about 2½ to 3 per cent of solvent, believed to be caustic soda, to produce a vegetable glue and used it for gluing together veneered stock for furniture panels, which glue was mixed in a mixing kettle, allowed to flow down a pipe to spreading apparatus with corrugated iron rolls which applied it to wood veneers, such as dresser tops, sides or fronts, chiffonier tops, sides or fronts, bureau tops, sides or fronts, chair backs, bedsteads, phonograph cabinets and panels generally. It is also admitted in the answers to the interrogatories that the West Michigan Furniture Company obtained its vegetable glue base to make such glue from the National Process Company from October 1915 to October 1918, and since October 1918 from the Kane Manufacturing Company and the International Process Company. It also appears from the testimony of Mr. Frank Shields that the glue base from the National Process Company and the International Process Company furnished the defendants was prepared by making a mixture of from 72 to 67½ per cent of so-called untreated cassava starch and from 8 to 7½ per cent of untreated corn starch, known as pearl corn starch, and from 20 to 25 per cent of treated corn starch of 90% fluidity to regulate the properties of the resultant glue, the untreated cassava being of brand GA, KTK, or KBK or KTH. The testimony also is to the effect that the National Process Company at one time attempted to degenerate corn starch to

make the thin boiling corn starch by an acid treatment, and that such thin boiling corn starch was mixed with the cassava without neutralizing the acid, whereupon the acid continued to act on the cassava and over-degenerate the whole glue base mixture. It is testified that there was a very [fol. 127] large quantity of glue base thus over-degenerated and that this was gradually used up by mixing it in with some of the regular glue base prepared as above in the proportion of about 25% of the over-degenerated material. Assuming that the glue base used by the defendant, West Michigan Furniture Company, was made substantially in accordance with any of the above ways, and in view of what you saw at the defendant's factory and your knowledge of the defendant's glue, please explain how the defendant's glue and the process of making it compares with the glue of the patent in suit and the process of making it.

A. The glue that I saw being used at the West Michigan factory happened to be made from the Kane base, of which there was a stock on hand, and of which stock I secured a sample, as well as taking a sample of the glue. The glue on the machine and flowing from the kettle to the machine appeared substantially like Perkins' glue, such as we have seen this afternoon; it was amply fluid, spread very well, possessed excellent tack, haired well, had the characteristic crackle and a sample of that was taken and examined. Likewise I secured a sample of the International Process Company's base from which glues were made up in accordance with the proportions and conditions used at the West Michigan Furniture Factory, as stated in the interrogatories and confirmed by the men at the plant, and they were found to be substantially alike, and both of them substantially the same as the Perkins' glue. It contained less than three parts of water, more nearly two and a half, was homogeneous, contained caustic; did not contain anything which would cause it to crumble or break up in any way or interfere with its penetration; it was substantially clear, substantially free from clotted suspended matter. The sample which was taken was not only tested at the time—that is, the finishing glue, but was again tested a number of months later in order to satisfy myself that it had stood up *up* properly and retained its qualities. The very fact that it was being used there for desks, veneers, phonographs

cabinets, shows that it must have had a cohesion and adhesion for satisfactory work and properly penetrated the wood as animal glue does. These statements apply equally to the samples of glue which I made up according to their practice from the West Michigan base made by the International Process Company, and to the glue which was made by them in the factory from the Kane base, and to the glue I made up with the Kane base. The Kane base consists largely of cassava flour; there is a small proportion of other [fol. 128] starch that has been added to it; and the International Process base showed substantially the make-up, on examination, that was indicated by Mr. Shields' testimony.

I have examined both bases with regard to their viscosity and found them reduced so that they have relatively little water absorptive power, that is, they are degenerated to the point where, when mixed with two to three parts of water, the starch, they are capable of making glue that has substantially the properties of animal glue, and they could be used for all around veneer work.

Both bases were also tested with other tests specified by Perkins. They were examined under the microscope and retained the form and size of the pellicles of the Perkins glue base. When treated with cold water they do not dissolve to form clear solutions at two hundred degrees, but when treated with water at one hundred and seventy they do make viscous liquids, rather then jellies; they result in a syrupy condition instead of a jelly-like mass as stated by Perkins in describing the test. Also I have obtained commercial samples of the GA cassava flour, which was one of the brands described by Mr. Shields, and of the KTK and KTH, and made glue from these so-called raw starches by mixing them in the same proportions, by mixing them with corn starch raw and then boiling the corn starch as described by Mr. Shields, and the results produced by those artificial parallels of the bases made according to the description of Mr. Shields of the process by which the International Process base was supposed to be made, have given me similar results. The samples of GA, KTK and KTH were examined separately to see if their water absorptive properties were low, and they all proved to be.

In my opinion the minimum textile strength of a block test ought to be say a thousand pounds, because the lateral

strength of the wood is as great as that, and we want something as strong as our wood. So that tests were made from the Kane material as defendants make it, and joints of about sixteen hundred and sixteen pounds per square inch, some considerably higher, were obtained. And likewise, the glue obtained from the base of the International Process Company mixed as the defendant West Michigan Furniture Company mixed it, was found to produce joints around nineteen hundred pounds per square inch.

As stated previously, the Perkins glue had been found at various times to vary from fifteen hundred pounds upward, and samples made at the same time as these were made, [fol. 129] tested in the same way as these samples from the West Michigan Furniture Company were tested, only using the Perkins base, were found to test seventeen hundred and ninety odd pounds. These compare favorably with the animal glues used in this art which, some of them, showing a breaking strength as low as thirteen hundred and some of them up around twenty-two hundred pounds.

The film strengths of glue made from Kane base showed about seven thousand pounds seven thousand three hundred and thirty odd pounds; from the International Process Base about six thousand nine hundred and eighty something; the Perkins figures mentioned were I think in the vicinity of eight thousand pounds, either of which is of course amply strong enough for a lateral glue joint.

The contractile qualities were not excessive; penetration was good; the flow, as the material was being handled in the factory, was excellent; it would have taken one very familiar indeed to distinguish the slightest difference between this material being worked in the factory and Perkins' glue as we saw it today. I found generally that the glue product of the defendants and their process in making it was in all material respects substantially the same as the plaintiff's process, and exactly as described by the patent in suit. The specific illustration of the patent in suit of course gives a preliminary treatment. What artificial preliminary treatment these materials may have had of course I cannot determine, but the effect is substantially there. It is perfectly possible to obtain that effect by selecting starches purchased from others.

The water absorptive power was certainly reduced in the sense of being low, and the defendant West Michigan Furniture Company have used a base which they purchased with its water absorptive property already reduced, so that they did not need to supply any preliminary treatment themselves.

The thin boiling corn starch in the mixture of the International Process Company base is one which has been very much degenerated from the raw starch by treatment similar to the Perkins—that is, the acid treatment. It is however degenerated very much too far for preferable use as a veneer glue; not that it might not be possible to use it, but it is very fluid indeed when made up. It serves excellently, however, to adjust the viscosity in the average of the aggregate product when it is mixed up in such a product. I have tested samples GA, KTK and KTH cassava and found that they had already low water absorptive properties. But in [fol. 130] cases where they came high, that is, higher then might be desired, the ninety degree thin boiling starch served to adjust that variation, to reduce the water absorptive power, so that when the mixture of either is made with the corn starch, taking the two corn starches together, a product is obtained the average water absorptiveness of which is practically the same as Perkins'.

Other properties of these glues were examined as indicated, and there was no indication whatever found that there was a substantial difference in property or technical effect.

Testimony of George P. Hummer, a Witness on Behalf of Defendants at the Trial October 29, 1919

My business is furniture manufacturing. Our factory is at Holland, the West Michigan Furniture Company. I have been engaged in the manufacture of furniture at Holland under the name of West Michigan Furniture Company, or in connection with that company, thirty years. We manufacture chamber suites and dining room suites. In the manufacture of our furniture we use animal glue for some purposes and vegetable glue for others. We use animal glues for all joint work and for veneering crotch work,

and we use the vegetable glue for flat work in veneering. As to the difference in price or cost of the two kinds of glue, that varies at different times. At the present time animal glues costs, such glue as we use, from tweney-five to thirty cents a pound; the vegetable glue nine to ten cents a pound. The animal glue I refer to is called joint glue. Recognized as pure hide glue, hide stock is what it is called. As to why we use animal glue at a cost of three or more times that of vegetable glue for some of our work instead of using vegetable glue for all of it, we find the vegetable glue is satisfactory for veneering or for flat surfaces, large flat surfaces, but where great strength is required in narrow surfaces, like joints or the use of dowels, to hold pieces together or in curved work in veneering, we have found that we need a stronger glue and we use animal glue for that purpose.

Where animal glue is used commercially for flat veneering work, as to whether or not such animal glue is of the same grade and quality as that which is used for joint work, they use a lower grade for veneering purposes with animal glue than they do for joint purposes. There is a distinct [fol. 131] class or grade or quality of animal glue that is sold and used for veneer work as distinguished from the higher grade used for joint work. As to the difference in price between those to grades of animal glue, the price usually runs, I should say, about thirty-three and a third per cent less for the vegetable glue than the joint glue. The animal glue which is sold and used for veneer work is of less strength than that which is sold and used for joint work. It is that weaker animal glue of which vegetable glue takes the place in flat veneer work.

Cross-examination:

As to what joint work is, as distinguished from veneering, we mean by joint work is where we have several narrow pieces or thin pieces joined together to make a wider piece. For instance, if you have lumber an inch thick and you want to join those together, you join the edges together, that is, by joint work we mean cases where we join the edges together, rather than flat faces. In bent work, that is a case where we have irregular shapes to be glued together.

As to some of these glues not being strong enough for one purpose, or another, even with regard to different grades of animal glue, and as to whether I ever actually tested the strength in pounds per square inch, of joints made up of such glues, the only tests I have made were by glueing together blocks or glueing together edges and then testing the strength of the blocks or the edges by breaking them apart. We never used any means by which we could measure the actual pounds per square inch that was required to break them apart. We have broken them apart with a chisel or where we joined the edges together we broke them apart with a hammer. As to whether in each case we could break any of these joints apart with a chisel and hammer, it depends on the quality of the glue. If it is good glue, the wood would split rather than the joint work, if the glue is not good the joint would break rather than the wood, indicating that the glue was not of sufficient strength.

Redirect examination:

The test to which I have referred satisfied me that the animal glue which I tested was of greater strength than the vegetable glue. As to how many different kinds or makes of vegetable glue I have been using in our plant at Holland for flat veneer work, we have had glue from five or six different houses, I should judge; five or six different firms. [fol. 132] Where I referred to joint glue, for which I used high grade animal glue, I included in that term such joints as mortise and tenon joints, as well as edge joints.

Recross-examination:

As to the names of those various concerns from which we obtained vegetable glue, we have had vegetable glue from the Solva Glue Company, or Solva Process Company, I am not certain about the name; the National Glue Company, the International—the National Process Company it is called, and the International Process; Mr. Kane or the Kane Glue Company, I think it is called, of Chicago; the Williamson Glue Company, I think of Chicago; the Napco Company. We have also used a vegetable glue or process glue from the Casein Company; also a vegetable

glue from Dove here in Grand Rapids; that is a glue used without heat, used cold. The National Process and the International Process are the glues we have used mostly. We have also used Perkins Glue Company glue, we had Perkins glue, a small quantity.

TESTIMONY OF R. C. WENDT, A WITNESS ON BEHALF OF DEFENDANTS AT THE TRIAL OCTOBER 29, 1919

I am a glue salesman for the Napco Corporation. I have been with the Napco Corporation since January 15, 1919. Prior to that time I was with the Perkins Glue Company until 1915. Prior to 1915 I had been with the Perkins Glue Company from the spring of 1908. Between 1915 and my connection with the Napco Company in January, 1919, I worked for the Bureau of Aircraft Production, United States Air Craft Production Bureau, the Chicago district. I was not with that concern during the entire period. I operated a veneer mill down in Cedars, Mississippi, before that.

As a glue salesman, or in my other business experience, I have been familiar with the use of glues of various kinds in furniture factories for about twelve years. Animal glue during the first twelve years and animal and vegetable glues and waterproof glues during my entire experience which covered a period of about twenty years; also silicate of soda. The glue referred to as waterproof glue was the blood albumen and casein glues. I am familiar in a general way with the extent to which animal glues on the one hand and vegetable and other glues I have mentioned on the other, are in use throughout the country today in furniture [fol. 133] factories. I am familiar with the different purposes for which the different kinds of glue are used. In furniture factories, generally speaking, the animal glues are used for joint work and on veneered work for short angles or curve work and dowel work, or mortised joints, and a number of other purposes, wherever they required a maximum strength joint.

I would say that in at least ninety-five per cent of the joint work in dowel and mortise joints animal glues are used exclusively as distinguished from the use of vegetable

or any other glues than animal glues. This is to get the maximum glue strength. I do not know of any extended use of vegetable glues of any kind for what is called joint work in furniture factories. I know of one concern that is using it. That is a furniture factory at Fond du Lac; they are using it. I do not know whether they are using it at the present time or not. That is the only instance that I know of. I do know of instances in which casein glue is being used in furniture factories for either joint work or veneer work at the present time; the Norquist Company, at Jamestown, are using the casein glue for joint work; and there is a concern at Bloomsburg, Pennsylvania, who are using casein for joint work; and the Hartzhog Furniture Company, at Saginaw, they are using it for Sonora phonograph cabinets on the bent work, the bulge work rather. They use vegetable glue and some animal glue on any flat work veneering they do. Those are not the only concerns that I call to mind now that are using casein glue either for veneering or joint work. There are several others. Steinman-Mayer, at Cincinnati, I have demonstrated casein glue there. The Williamsport Furniture Company, Williamsport, Pennsylvania, they are using some casein and some vegetable glue. They use the casein for the bent work or any work that requires a very strong glue joint, and the vegetable glue for flat surfaces and veneering. I do know factories in which silicate of soda is being used as a glue either for joint work or veneer work; not a furniture factory. I know of panel factories that use silicate of soda that sell their products to the furniture factories. There are two in Goldsboro, North Carolina, and one at Memphis, Tennessee, and one in Mishawaka, Indiana, who are using a combination of silicate on indestructible trunks. The concern at Mishawaka is the Indestructible Trunk factory; they use silicate of soda. As to just what sort of silicate of soda or compound they use, it is the liquid form, comes in liquid form. I do not know its exact composition. It is stuff that is in general use for that purpose.

[fol. 134] I was familiar with the early introduction of the Perkins vegetable glue into furniture factories or piano factories. I was familiar with efforts to introduce the Perkins vegetable glue into use in the factory of Hood & Wright of Big Rapids, Michigan.

It was about 1910 or 1911 I installed a spreading machine and two vegetable glue mixers for the Perkins Company. After they used the glue for several weeks I was sent back there again owing to them having loose veneers and defective work, and then after that I was sent on some other work, and I learned after that that they had discontinued the use of it. At the time that I introduced or attempted to introduce the use of the Perkins vegetable glue, they were using animal glue previously. After they abandoned the effort to use the Perkins glue they used animal glue when I got there. The first time I went there I was there, I would say probably a week, and the second time I was there a week or such a matter.

Referring to the use of animal glues in furniture factories, I have recently made or observed tests to demonstrate or determine the relative strength of vegetable glues and animal glues. We made some tests at the Armour Institute in Chicago on a number of test blocks and we used seventy-one tests all told, and we found that the animal glue made stronger joints than the vegetable glue, that is, of course, by mixing the same proportions of water with the animal glue that we mixed with the vegetable glue. The vegetable glue used in those tests—there were two samples brought there and I was told that one sample came from the West Michigan Furniture Company, at Holland, Michigan, and one sample was brought there in the dry powder form, which we mixed at the laboratory, which was also brought from the West Michigan. Those tests were conducted under the direction of Professor Huntley of the Armour Institute.

As to what the first tests were and who was present, we made so many that I will have to refer to some notes on them. On October 18th we glued up four blocks of joints with the West Michigan sample; those blocks were numbered 1, 2, 3 and 4; and we glued up four blocks numbered 5, 6, 7 and 8 with the dry sample that was mixed cold at the Armour Institute laboratory; and we glued up 9, 10, 11 and 12 with the Armour animal glue. While these blocks were being glued we found that a spot of oil had percolated through the end of the block, so we repeated this test the following day.

[fol. 135] Of these joints numbered 1, 2, 3 and 4, No. 1 broke at 922 pounds; that is the West Michigan Company

sample. Block No. 2 broke at 814 pounds. Block No. 3 broke at 1200 pounds; and block No. 4 at 1168 pounds. Those were all West Michigan samples. The figures that I have given relate to per square inch of glued surface, approximately a square inch.

Then on the cold mix blocks numbered 5, 6, 7 and 8, the glued joint broke at 1418 pounds, that is on No. 5; on No. 6, 1720 pounds; on No. 7, 862 pounds; and on No. 8, 1688 pounds.

I referred to those last tests as having been made with cold mix. The first four blocks were made with the glue mixed by what is known as the hot process, or a semi-hot process; it is cooked at the factory, warmed to a temperature of about 165 degrees. In this cold process they do not apply any heat there; they dissolve the glue with the caustic solution.

Then on the animal glue blocks, that is Nos. 9, 10, 11 and 12, No. 9 broke at 1380 pounds; No. 10 at 908 pounds; No. 11 at 740 pounds; No. 12 at 974 pounds.

It appearing in these tests that I have just given that the animal glue appeared to be weaker than the two vegetable glues, the explanation I would offer of that is as follows: When I got there Monday morning—on Saturday morning, to make this test, I had not determined as to what strength the animal glue should have been mixed at. So I relied on the information I got from the Armour Institute, or the Armour factory chemist, that is at the glue factory, and he gave me the porportions of two and a quarter to one of animal glue, and I found later on that that was not full strength. So the vegetable glue being mixed at two and one-tenth water to one of glue, we mixed up another sample of two and one-tenth water to one of the glue, animal glue, and we found it gave us these results:

Block No. 50 broke at 3852 pounds; that was animal glue. Those figures refer to square inch glued surface, the same area we used formerly. Block 51 broke at 3,000 pounds; block 52 at 3150 pounds; block 53 at 4226 pounds.

In the last test I have mentioned the blocks in the 50 series, as to how the animal glue was applied, the difference in this test that I have just mentioned and the first test was that we used less water in the last test and we also soaked the ends of the test blocks in glue the same as we

had soaked the vegetable test blocks in the glue. Of course, that practice is not in use at the factories when they use this glue, but in order to make a fair test of it we subjected [fol. 136] both blocks to the same treatment. We were endeavoring to get the maximum strength of the glue in both cases. As to how long did we soak the blocks in the vegetable glue in the one case before putting them together and how long did we soak the blocks in the animal glue in the other instance before putting them together, we soaked them both two hours. The figures I have previously given with respect to the vegetable glue were figures based on tests where the blocks had been soaked in the vegetable glue for two hours before being placed together.

As to the presence of oil on the blocks tested in the first test, the oil came from the spindle that they used in turning down the block, the lathe in which the blocks are turned. The workmen generally put a drop of oil on there to keep the block from burning, and it percolated through the center of the block. That appeared on the entire first test. It was discovered shortly before they were being glued. Mr. Stryker and Mr. Grosvenor and Mr. Crosby and Professor Huntley were present when that discovery was made. That fact was called to their attention. It was discussed at the time. If I remember correctly, Mr. Grosvenor called it to our attention. As to what effect the presence of the oil had, in my judgment, upon the adhesion of the blocks that were glued together with the animal glue, the animal glue will not stick to oiled surfaces. I think that is due to the fact that there is no alkali or acid in the animal glue to cut the oil, whereas the vegetable glue will cut oil to a certain extent. It will stick on oiled surfaces where animal glue will not. I think it is due to the presence of the alkali in the vegetable glue.

We made some further tests with the vegetable glue in which we saw to it that there was no oil on the blocks. Blocks Nos. 22, 23, 24 and 25 had no oil on. They were glued together with vegetable glue made by the cold process. No. 22 broke at 1534 pounds; 23 broke at 1650 pounds; 24 broke at 2120 pounds; and 25 broke at 1570 pounds. Those are the figures indicating the strength of the vegetable glue that are to be compared with the figures that I gave respecting the animal glue used with blocks 50, 51, etc., where the break-

ing strength was from three to four thousand pounds. The tests of these two sets of blocks, they were treated alike, the one vegetable glue and the other animal. There was no oil observed on the blocks in either case and the glue was applied in the same manner to both sets of blocks. As to whether I personally prepared or mixed the vegetable glue [fol. 137] that was used in these tests, I mixed one sample. I helped prepare the cold mix. This was at the Armour Institute. As to with what care and skill I prepared that to get the best results, we used a scale for weighing grams. We used 200 grams of water—210 grams of water to 100 grams of dry glue. I used my best care and skill to get the best possible results from the vegetable glue we tested. I am familiar with the methods of preparing and mixing vegetable glues for such purposes. I have made tests recently at the Armour Institute with other vegetable glue or glues than the two I have mentioned. I made a test of the same brought by Mr. Miner. We glued up a number of panels with it at the New Albany veneer factory. As to whether we made any further tests at the Armour Institute, we did make further tests there. We mixed a sample of glue on the 27th; that glue was mixed two to one, or two and one-tenth to one, and we glued up blocks Nos. 60, 61, 62, 63 and 64. That sample was labeled Gerson & Sachse glue. No. 60 broke after being glued twenty-four hours. Other joints had been glued thirty-six hours. These joints that were glued twenty-four hours with the Gerson & Sachse broke at 1212. No. 61 broke at 1470 pounds. No. 62 broke at 1090 pounds. No. 63 at 1194 pounds. In applying the glue to those blocks, they were soaked in the glue two hours.

Referring to the tests made at New Albany, Indiana, they were made with this same glue, the Gerson & Sachse glue; at least, one was so labeled. We made a mixture of two and one-tenth water to one dry glue and six per cent caustic soda, cold mix, without any heat, and we glued up a number of phonograph 5-ply panels, and we took a sample of that and carried on this test. That test at New Albany was made under the regular working conditions in a panel factory, of the New Albany Veneer and Panel Company. As to the results obtained from those tests, so far as I, from my knowledge and experience on the subject, could determine, the work came out first class. According to my

judgment, the veneers made with that glue were satisfactory commercial veneers. The tests here showed that they—I made some tests—the tests showed that they were really higher than the vegetable glues that we tested out previously. The test showed—Blocks Nos. 64, 65, 66 and 67 were glued with the Gerson & Sachse glue mixed at two and one-tenth water to one of glue, six per cent caustic, cold burst, that is, without heat, and the joints were soaked two hours, the same as the other vegetable glue that were tested out, and they tested as follows:

[fol. 138] No. 64 tested 1130 pounds; No. 65 tested 1310 pounds; No. 66 tested 1364 pounds; No. 67 tested 1550 pounds.

The tests I have just described were tests made with blocks of wood at the Armour Institute after the test at New Albany. At New Albany we glued up veneers in the panel factory. Those veneers themselves were not tested in any way, but the same glue was used on those blocks that we used on those veneers.

As to where did I get that so called Gerson & Sachse glue and what I understood it was, I did not ask any questions about it, but Mr. Miner brought it there. As to whether any of the panels glued up with this so called Gerson & Sachse glue at this plant in New Albany were actually sent out with the regular stock or such panels as were being manufactured there, I would say this: These panels were glued up—there was an order for some odd thousand panels going through the factory and this was just a part of that order and this material went right through with the regular work. I saw it glued up the same way that they glued up all the other stock.

As to what became of the veneer panels that were glued up with this so called Gerson & Sachse glue so far as I saw, I saw them go right out into the dry house with all the other panels.

Referring to the tests of this so called Gerson & Sachse glue, block tests which we made at the Armour Institute, I have not mentioned all the tests that were made there with that glue on blocks. We also used the mixture of that same glue with eight per cent caustic soda and we clamped blocks Nos. 68 and 69 with a hand clamp.

The pressure commonly used in furniture factories on these blocks—68 tested at 912 pounds and 69 tested at 672

pounds. Then blocks numbered 70 and 71 were glued with a six per cent mixture—I am in error there. We used the regular weights on 68 and 69, that is, the same pressure that we used on all the other blocks, but we did not soak them. They were brush joints, commonly known as brush joints in a furniture factory. These tested 912 and 672. We done this to determine what effect the soaked joints had in bringing out the maximum sticking quality of vegetable glue.

I have referred to a six per cent mixture and an eight per cent mixture. We had two separate samples of this so called Gerson & Sachse glue. The six per cent gave us the stronger joint. By six per cent I mean six per cent of caustic soda; the other was eight per cent of caustic soda. I mixed those.

[fol. 139] As to what my notes show, or my recollection respecting the tests that were made on blocks Nos. 70 and 71, Nos. 70 and 71 they were glued with the mixture mixed at six per cent caustic, the Gerson & Sachse glue; two 50-pound weights used for pressure. Brush joints; not soaked. Those joints tested, No. 70 tested at 1542 pounds; and 71 tested 1164 pounds.

Cross-examination:

In regard to these various tests, where I spoke of three tests of blocks of four each that were glued up in the presence of plaintiff's representatives on the first day of these tests, as to those they were Nos. 1 to 12.

I also stated that some oil was observed and therefore it was proposed to glue up some blocks on which there was no appearance of oil. It is a fact that a day or so later we did glue up two series of blocks numbered from 18 to 41, inclusive, and tested those in the same way in one series, using our 50-pound weights to apply the pressure to the joint and in the other series using the lever to get substantially the same effect. Those tests were carried out in the presence of Mr. Stryker and plaintiff's representatives, and the blocks broken in their presence.

As to the results of breaking strength on those blocks 18 to 41, taking first the 18 to 21, which was the alleged West Michigan hot burst glue, No. 18 broke at 1192 pounds; No. 19 broke at 570 pounds; No. 20 broke at 1216 pounds;

No. 21 broke at 1320 pounds. Taking the West Michigan cold mixed glue, the results we got with that on blocks 22 to 25. On No. 22 got 1534 pounds; on No. 23 we got 1650 pounds; on No. 24 we got 2120 pounds; on No. 25 we got 1570 pounds.

The next set were blocks 26 to 29, glued up with the same animal glue that we had been using, mixed two and a quarter to one. On No. 26 we got 708 pounds; on No. 27 we got 700 pounds; on No. 28 we got 800 pounds; on No. 29 we got 604 pounds.

On the next series of the test, blocks Nos. 30 to 33, glued up with the so-called West Michigan hot burst glue, block 30 we got 930 pounds; block 31 we got 642 pounds; block 32 we got 1500 pounds; block 33 we got 974 pounds.

The next set of blocks, Nos. 34 to 37, alleged to be glued up with the West Michigan cold mixed glue, those blocks were not soaked and they were put under approximately 100 pounds pressure. No. 34 broke at 730 pounds; 35 broke at 494 pounds; 36 broke at 292 pounds; 37 broke at 640 pounds.

[fol. 140] The next and last set of those two series, to wit, blocks 38 to 41, which were glued up with the same animal glue, block 38 broke at 1354 pounds; 39 broke at 1858 pounds; 40 broke at 2144 pounds; 41 broke at 1968 pounds.

I have referred to some other tests with block numbers number from—beginning at 50. None of these other tests were carried out in the presence of any of plaintiff's representatives. Neither Mr. Stryker, Dr. Grosvenor nor plaintiff's counsel were present at any of those tests. They were carried out after we had gotten these results on blocks numbered from 1 to 41. As to those tests which were carried out in the presence of plaintiff's representatives, the strongest animal glue joint which we obtained was 2140 odd pounds. Block No. 40 tested 2144 pounds.

In so far as any tests we made in the presence of plaintiff's representatives, the vegetable glue showed as the strongest joint that we obtained therewith, 2120 pounds on block 24. In other words, the maximum which we were able to obtain with the vegetable glue and the animal glue, in so far as those tests were carried out in the presence of plaintiff's representatives were concerned, were substantially the same, to wit, 2144 with animal and 2120 with vegetable glue.

Now, as to the tests which were not carried out in the presence of plaintiff's representatives, take blocks 50 to 53, which were glued up with animal glue, the proportion of water we used with that animal glue was two and one-tenth water to one of animal glue. We used the same glue that plaintiff's expert took a sample of over there. The blocks were soaked in it two hours.

As to how long were those blocks allowed to remain under pressure before they were taken out of the clamps, blocks No. 50, 51, 52 and 53 were put to soak at 10:30 a. m. in animal glue, Armour No. 1 glue, mixed at two and one-tenth to one—two 50-pound weights used for pressure—and they were removed from the clamps the following day. As to whether they were under pressure approximately twenty-four hours, no, they were under pressure, I should say, about fourteen hours. They were left under pressure all that day and up until the following forenoon. You ask, would that not be more than fourteen hours, nearer twenty-four hours? They were put to soak at 10:30. Yes, they were under pressure about twenty-four hours, that is right.

After the weights were removed from the blocks, as to how long it was before they were broken to determine the strength of the joint, they were broken on the 25th; [fol. 141] they were glued up on the 23rd at—the first blocks went to pressure at 10:30 and they were broken on the 25th in the forenoon. That is, about another day was given to allow them to dry out after the pressure was removed. We used the same kind from the same batch of animal glue in testing blocks 50 to 53 that we did on the other tests of animal glue which was carried out in the presence of plaintiff's representatives. It was the same glue. It was Armour's glue. It was hide glue. It was their best grade of hide glue. That is what they told me. I do not know the price of that particular grade.

Coming to the alleged Gerson & Sachse glue tests on blocks 60 to 63, they were put under pressure at 2:30 p. m. on the 27th and the weights were removed the following morning, on the 28th, and they were tested at 5:00 o'clock on the—started tests at 5:00 o'clock on the 28th, the same day on which they were removed from the pressure or clamp. That was yesterday. After they were taken from the clamps or the pressure removed, they were

only allowed a small fraction of a day to dry out and season.

As to the glue used on Nos. 64 to 67—as to how long were the blocks allowed to remain under pressure and how long were they allowed to season after pressure was removed, this entire test was put through at the same time, just the same as blocks 60 to 63. That also applies to blocks 68, 69, 70 and 71.

As to these tests on blocks 50 to 53 and 60 to 71, as to whether we notified Dr. Grosvenor, plaintiff's representative, to attend those tests, yes sir, I told Mr. Stryker that we were going to make some further tests. As to whether those tests were within the time set in the notice that applied to the tests, I do not know. I was told that those tests would be made. As to what test I told Mr. Stryker we were going to make after the completion of the first tests which were made in the presence of plaintiff's representatives, I told him we were going to put some bloks to soak in the animal glue the same as those that were put to soak in vegetable glue. I did not tell him we were going to make up any tests with the Gerson & Sachse alleged glue. I did not notify him of any such tests.

In my direct examination I stated that casein glue was used in certain factories for some purposes. As to how do I know casein glue was used in those factories, I installed it there. As to how do I know it was casein glue. I know it is casein glue because I understand the nature of those glues. As to whether it was a mixture of pure [fol. 142] casein with water, or casein with certain chemicals and other ingredients with water, I would say casein and other ingredients to make up the waterproof glue formula. It was what is known as special casein waterproof glue.

With regard to silicate of soda being used in some factories for some purposes, I know that because I visited those plants. As to how do I know it was silicate of soda, I saw the tank cars and the iron drums that it came in and I understand the working of silicate enough to recognize it when I see it. I did not make any chemical test to determine whether that was silicate of soda or some other compound of soda. I do know what other

chemicals were used in the casein glue in those places that I mentioned. They used a caustic. Most of them were all ready prepared and mixed with water, so I am not in a position to state just what they were composed of. As to what was in the preparation in the others, none of those I mentioned used anything but the prepared waterproof glues. None of them used simply straight casein with water. They all used the so called waterproof glues, specially prepared, with one exception and that is the Empire Manufacturing Company at Golsboro. They used casein back in 1910 or 1911 and they mixed it with lime at the time I installed Perkins glue there.

Redirect examination:

The date of the first tests at the Armour Institute at which plaintiff's counsel and expert, Dr. Grosvenor, were present, was on Saturday, the 18th of October. All the tests I referred to were made during this present month of October. The date of the factory run or test of the so-called Gerson & Sachse glue at New Albany was on the 24th. The date of the subsequent block test with the Gerson & Sachse glue at Armour Institute—they were glued upon the 27th and we tested for strength on the 28th. At the time that we made the tests on Ocober 18th, when plaintiff's counsel and expert were present, I did not know anything about any proposed test of the so-called Gerson & Sachse glue either at New Albany or the Armour Institute. The proposed run or test of the Gerson & Sachse glue first mentioned was on the morning of the 23rd. It was mentioned to me by Mr. Miner. In that run at New Albany, the Gerson & Sachse glue was applied to the veneer in the like way, by putting it through the spreading machine, the regular spreading machine that was in use there.

[fol. 143] As to what sort of vegetable glue that concern uses regularly, they are using the International Process glue.

Recross-examination:

As to the tests on blocks 50 to 53 with animal glue, where we got something over 3,000 pounds to the square inch

breaking strength, I do not recall whether we did invite Dr. Grosvenor to witness those tests. I know I invited Mr. Stryker to witness them. I did not invite Dr. Grosvenor, plaintiff's expert, though.

TESTIMONY OF OTTO KREIGER, A WITNESS ON BEHALF OF DEFENDANTS AT THE TRIAL OCTOBER 29, 1919

I am veneer foreman with Grand Rapids Chair Company; I have been foreman in that plant twenty-five years. I am familiar with the glues that are used in the plant of the Grand Rapids Chair Company. They are animal glue and vegetable glue. Animal glue is used in that establishment for glued up stuff and cabinet work and veneer, crotch mahogany, walnut butts and cabinet department. Vegetable glue is used for straight veneer. Animal glue is used for the other purposes I have named and vegetable glue for the straight veneer work, because the vegetable glue is not good for end veneers, neither for cabinet work.

As to how the glues compare in strength, the strength on straight stuff, where there is not much pressure to it, it is all right, both alike, but the binding part of animal glue is better than the vegetable glue.

I am familiar with animal glue; that is what has been used for veneer work. As to what difference, if any, there is between animal glue that is used for veneer work, or was used for veneer work, and animal glue that is used for joint work, well, we are using two grades of animal glue; for joint work joint glue and veneering glue for veneer. There is a difference in price. That joint glue sets quicker than veneer glue will. That is the reason we use different glue for veneering. As to difference in price between the two, the joint glue costs the most. Four cents a pound difference.

TESTIMONY OF JOHN H. VENEKLAASEN, A WITNESS PRODUCED ON BEHALF OF DEFENDANTS AT THE TRIAL OCTOBER 29, 1919

[fol. 144] I am superintendent of furniture factory of John Widdicomb Company. I have occupied that position about twenty-one years. Bedroom furniture is made in

that factory. I am familiar with the glues that are used and have been used in that factory during the time I have been there. Hide glue, animal glue, was the sort of glue that was being used there when I began work there twenty-one years ago. That continued to be the only kind of glue used there up until about four and a half years ago. Vegetable glue has been used there during the period since four and a half years ago. The vegetable glue has been used there for the past four and a half years for veneer only. Animal glue is used for joint and cabinet work and also for bent work on veneer work. As to the relative cost of the two glues, the animal glue and the vegetable glue, the animal glue, the joint glue, costs about thirty to thirty-five cents a pound. The vegetable glue costs about eleven to eleven and a half cents. As to why it is that the animal glue is used on certain work instead of using vegetable glue on that work, the animal glue sets quicker; it is stronger. Vegetable glue sets very slow and it takes too much time to handle it. You have to wait too long for the stuff to be ready to come out of the press. We have never used any vegetable glue in our department for joint work.

TESTIMONY OF CHARLES C. PENNINGTON, A WITNESS PRODUCED ON BEHALF OF DEFENDANTS AT THE TRIAL OCTOBER 29, 1919

I have been connected with the Gunn Furniture Company, Grand Rapids, approximately fourteen years. That concern manufactures desks and sectional bookcases. During that period I have been familiar with the sort of glue or glues used in that establishment. Animal glue was being used there fourteen years ago. As to how long that continued to be the fact, we are using it now continuously. We never used any other glue. Always used animal glue, what little veneering we do. Most of our stock is bought, built up stock. I have had no experience in the using of vegetable glue. I experimented slightly, but it was not satisfactory. It did not suit me. As to what tests or experiments I made with vegetable glue, they were joints. I made those tests, I should say, about three years ago. The result of those tests, it was very unsatisfactory. They would not hold; broke apart. I found the animal glue very

much stronger. Where we have used animal glue for such [fol. 145] veneering as we have done and whether it has been the same quality or grade as the animal glue that we used for joint work, we use one grade only all through the factory. The price of that glue today is twenty-eight cents.

Cross-examination:

As to our panels being obtained from some other party, well, there are various firms that we buy them of. As to some of them, well, the Gorham Manufacturing Company, Mount Pleasant. I know they use vegetable glue in making those panels. Another concern we get our panels from is W. H. Roddis, of Marshfield, Wisconsin. They use vegetable glue in making up those panels. Another concern we get panels from is Hood & Wright, Big Rapids. I know they use vegetable glue in making up those panels. As to other concerns we get panels from, that is about the limit; that is all I can recall. There are some others that have submitted samples at various times, but we have not accepted them. The panels we use are made up with this vegetable glue, from those three firms.

Testimony of Professor Phil C. Huntley, a Witness Called on Behalf of Defendants at the Trial October 29, 1919

I am associate professor of experimental engineering at the Armour Institute and do consulting and testing work on the outside. I have been connected in that capacity something over five years. I was a graduate of the University of Arkansas; taught there, I think it was six years, after I graduated, in a similar line of work, experimental laboratory work, testing.

As to experience I have had during all that time in testing strength of such things as glues, of course, glues comes up at different times and we have glue tests, but the strength of all materials, testing them, is an every day job.

As to facilities at the Armour Institute for making accurate tests of the strength of materials, and of such things

as glue in particular, we have the standard testing machines, the Riehle machine and the Olson.

I have recently made some tests there to compare the relative strength of animal and vegetable glues. On October 18th Mr. Crosby, Dr. Grosvenor, Mr. Stryker, Mr. Wendt and Mr. Macauley, were down at the laboratory and we made up some joints, No. 1, 2, 3 and up to 17, leaving [fol. 146] out No. 13. They were the ones that had small oil spots on them. I will give you the pounds per square inch at which breakage occurred.

Group No. 1 was made from a jar submitted by Mr. Birk and marked "Hot Mix, West Michigan." That included No. 1, 2, 3 and 4. They were under pressure for twenty-two hours, approximately twenty-two; it might have been a few minutes one way or the other, and tested forty-five hours after releasing them from pressure. No. 1 broke at 914 pounds; No. 2 at 808 pounds; No. 3 at 1,230 pounds; No. 4 at 1,222 pounds; an average of 1,043 pounds.

The second test was from a sample marked "Vegetable Glue from West Michigan," and mixed by Mr. Birk, with cold water. That included the group numbered 5, 6, 7 and 8. No. 5 was 1,420 pounds; No. 6, 1,732 pounds; No. 7, 854 pounds; No. 8, 1,681 pounds; an average of 1,422.

The third group was from animal glue mixed by Mr. Wendt, said to be Armour No. 1 glue. The same pressure and the same time as in test No. 1, group No. 1 and group No. 2. The glue joints were soaked for two hours before pressure applied. In test No. 3 the animal glue was applied at a temperature of about, I should say, 115 to 120 degrees, and just brushed on, had the same pressure, the same time of pressure and same time out of pressure. No. 9 broke at 1,368 pounds; No. 10 at 913 pounds; No. 11 at 733 pounds; No. 12 at 978; an average of 998. That was on a brush joint.

The fourth test were two samples of glue from the same jar as group No. 1, but they were put in clamps instead of a weight, No. 14 and 15; No. 14 was 460 pounds; No. 15 was 1,532 pounds; an average of 996 pounds.

The fifth group was from the same one as group No. 2, No. 16 and 17. No. 16 broke at 1,211 pounds; No. 17 at 1,007. Those were clamped. An average of 1,109.

In the fourth and fifth groups they were brushed joints. In the sixth group the same glue was used as in group No. 1; that is, from the jar submitted by Mr. Birk, soaked two hours and one hundred pounds pressure applied and held for twenty-two hours and removed and tested twenty-four hours later. No. 18 broke at 1,202 pounds; No. 19 at 576; No. 20 at 1,225; No. 21 at 1,344; an average of 1,449.

(The Court: I don't see how you get that. Your average is bigger than any one of the individual tests.)

That should not be 1,449. It should be 1,087.

[fol. 147] The seventh group was the vegetable glue, marked "West Michigan," and was mixed by Mr. Wendt in the laboratory, a pressure of one hundred pounds to the square inch applied, removed twenty-two hours later and tested twenty-four hours later. This group includes No. 22, 23, 24 and 25. No. 22 broke at 1,536 pounds; No. 23 at 1,654; No. 24 at 2,100; No. 25 at 1,576; an average of 1,716.

The eighth group is the same glue as in the third test, that is the animal glue which was mixed on Saturday and these were put up Monday, just re-heated and includes the group numbered from 26 to 29. This was a brush joint. No. 26 broke at 699 pounds; No. 27 at 717 pounds; No. 28 at 797 pounds; No. 29 at 615 pounds; an average of 707. On that animal glue we used two and one-quarter of water to one of glue.

The ninth group included 30 to 33 and the pressure was applied by a lever instead of the dead weight. The ninth group was the cold mix, mixed by Mr. Wendt. No. 30 broke at 961 pounds; No. 31 at 644 pounds; No. 32 at 1,495; No. 33 at 970; an average of 1,018 pounds.

The tenth group is from the jar marked "Hot Mix submitted by Mr. Birk," and included the group numbered 34 to 37. No. 34 broke at 735 pounds; No. 35 at 492; No. 36 at 287; No. 37 at 643; an average of 539.

The eleventh group was the same glue that was mixed on Saturday by Mr. Wendt, the animal glue, and the group included No. 38 to 41. No. 38 broke at 1,372 pounds; No. 39 at 1,863; No. 40 at 2,198; No. 41 at 1,952; an average of 1,846.

The last three groups were brushed joints.

As to how I account for the difference between that eleventh test and the third test, in the third test the glue was fresh mixed. They used too much water. Mr. Wendt bought the glue and the chemist advised them to use a certain percentage of water and it was too thin, just like killing a glue in putting in too much water. That was Saturday morning he mixed it. He made the eleventh group and set those up at 3:45 on Monday. We had given it over two days to dry out so that part of the water evaporated in warming it up two or three times.

We used the same mixtures on those tests, except one had an opportunity to dry out. That is the only method by which it can be accounted for which I think is reasonable.

The ninth, tenth and eleventh groups are brushed joints, hot and cold, vegetable and animal.

[fol. 148] The twelfth group includes 42, 43, 44 and 45 and is made from animal glue which was taken from the same box or same batch, dry glue, that we used Saturday, but instead of using two and one-quarter of water to one of glue we used two and one-tenth of water to one of glue, which made us a thicker mix; and Nos. 42 to 45 was put under pressure with one hundred pounds to the square inch and held seventeen hours and tested twenty-seven hours after removing pressure. No. 42 broke at 1,693 pounds; No. 43 at 2,575; No. 44 at 1,466; No. 45 at 2,259; an average of 1,999.

We took the same glue then and made up four other joints, which is the thirteenth group, and immersed the ends of the joints in the glue and held them for five minutes.

As to whether the glue used in the twelfth test was the same as that in the tenth test and first, the same glue but a different amount of water. We made up a new batch. Instead of using two and one-quarter we used two and one-tenth. Two and one-quarter makes a very thin mix. The difference is very great, a difference of veneer a little over one five hundred and two thousand. Of course, you can kill any glue by keeping pouring on water; you won't have any glue at all. As to whether that is usually true with animal glue, that a difference of two and one-quarter

and two and one-tenth parts of wa' ·r will make a difference of nearly four times, yes. I do not say it is generally true, but that will happen in making up joints if you use too much water and just dip them in and put them together. The water is what you take up mostly; not so much of the glue. It is very thin.

The thirteenth test the same glue was used as in the twelth, but the joints were soaked for five minutes and the pressure applied the same as in the twelfth, and this includes the group numbered 46 to 49. They were in the press seventeen hours, removed and tested twenty-seven hours later. No. 46 broke at 2621 pounds; No. 47 at 2620; No. 48 at 2552; No. 49 at 2084; giving an average on the five minutes soak of 2469.

As to whether it is also true that usually there will be that great difference between the load required to break a joint where the glue in the one case is brushed on, and in the other case soaked for five minutes, yes. If you will refer back to the vegetable glue joints you will find a greater difference than that. This soaking is only five minutes, raises from two thousand to a little over twenty-four hundred. The brush joint 1999 and soaking it five minutes, 2469.

[fol. 149] The fourteenth group, we took the animal glue the same as in the twelfth and thirteenth group, out of the same pot, but we soaked the joints for two hours before pressure was applied. We applied the pressure and held it for twenty-four hours; removed and tested twenty-four hours later. This group is numbered 50 to 53, inclusive. No. 50 broke at 3825 pounds; No. 51 at 3158; No. 52 at 3268; No. 53 at 4192; an average of 3611.

At the institute we have a pattern shop and we went to the pattern shop and got some cabinet glue that we use in pattern making, to see what it would stand and on the two-hour soak, one hundred pounds per square inch applied for twenty-fours, removed and tested twenty-fours later, the group was numbered 54 and 55, only two tests, and we found that 54 broke at 1153 pounds; No. 55 at 1561; an average of 1357.

The sixteenth group was the same. Cabinet glue. Brushed joints; and includes the group from 56 to 59. No. 56 broke at 1581 pounds; 57 at 1408 pounds; 58 at 2181;

59 at 1137; an average 1577. That was cabinet glue that we use in the pattern shop; the same glue as the fifteenth test; that is a lower grade of animal glue.

As to the difference in treatment, we did not know the percentage of water. We wanted to see what it would break at. It was a low grade we used in the pattern shop. Test No. 15 was soaked two hours. Test No. 16 was brushed joints. Otherwise the same glue and the same pressure.

The Court: Doesn't that rather belie the usual experience?

A. Yes, sir; we got a little higher on the brushed joint than on the soaked, but they used a very thin mix of glue for student work.

The Court: Is it usually true that in the lower grade of animal glue the thinner the mixture that a brushed joint is, we will say, the equal in strength of a soaked joint?

A. I should say it was not; that the soaked joint must be stronger.

The Court: Then there must be something else to account for this, something that does not appear.

A. You have a copy there and we show the whole tests and were trying to check. We do not know how it was mixed and we do not know how old it was. It might have deteriorated.

The Court: You might call these two tests then "freak tests," or one of them at least?

[fol. 150] A. Yes, sir. The seventeenth group was from a jar of glue submitted by Mr. Miner and marked "Gerson & Sachse A 8%." This was submitted to me on Saturday morning, last Saturday morning. That was October 25th, and the joints were made Monday afternoon. Pressure applied at 3:30 and remained for seventeen hours; removed and tested eight hours later. The joints were soaked for two hours. The group was numbered 60 to 63. No. 60 broke at 1196 pounds; No. 61 at 1458; No. 62 at 1087; No. 63 at 1201; an average of 1236.

The eighteenth was glue from another jar submitted by Mr. Miner, on the same date as above, and marked "Gerson & Sachse B 6%." The joints were soaked in that for two hours. A load of one hundred pounds per square inch applied and held for seventeen hours; removed and tested

eight hours later. The group is numbered 64 to 67. No. 64 broke at 1123 pounds; No. 65 at 1300; No. 66 at 1332; No. 67 at 1530; an average of 1331.

This eight per cent and six per cent refers to the markings on the jar which they told me was eight per cent caustic and six per cent caustic.

The nineteenth group was from the same glue as the seventeenth, that is, from the Gerson & Sachse A eight per cent brushed *joints*. No. 68 broke at 905 pounds; No. 69 broke at 678; an average of 791.

The twentieth group is the same as the eighteenth group; the same glue; the same pressure and time; numbered 70 and 71; brushed joints; out of the Gerson & Sachse B six per cent. No. 70 broke at 1558 pounds; No. 71 at 1176 pounds; an average of 1367.

The Court: There again your brushed joint stood greater strain than the soaked joints.

A. Yes, sir, that is, on the Gerson & Sachse.

Q. How do you explain, if you can explain, the results obtained in the tests of animal glue in group No. 3, where the figures given seem to run low?

A. 998 average. Too much water, and that is the group that has some oil on the joints.

Q. Explain what there was about that oil.

A. In turning the blocks the pattern maker or lathe man usually puts a little drop of oil on the end of the block to keep it from burning. The blocks when they are cut are six and one-half inches, and to keep them from burning he puts a little oil on the block.

Q. In this case how came this to happen?

A. We have a man as pattern maker and I wanted a hundred blocks turned out. He made up the hundred, roughed them down, roughed them to two inches in di- [fol. 151] ameter—first roughed them all, and then was coming back to turn them down to the right size. He put this little drop of oil on one side. He was taken sick Thursday afternoon and the whole hundred laid there so that the oil percolated into the blocks. Another time, if he hadn't been sick, he would have turned them that day and cut off that end a quarter of an inch, cut the oil off before it had time to percolate through. The presence of

the oil on those blocks was discovered before they were glued up.

Q. Then why did you glue them up?

A. We had no more joints turned up at the time. This was Saturday afternoon and, as a usual thing the laboratories and commercial places close down at twelve and we had no lathe man. The effect of the oil, in my judgment, on the animal glue would be that it would not stick to the oiled joint. On the vegetable glue I think the caustic probably in the vegetable glue cuts the oil to a certain extent.

As to the date of these tests, of the gathering there, the plaintiff's counsel and expert, was that on the following day or when was it? On the following Tuesday. We made up another set of blocks on Monday. They were 18 to 21, 22 to 25, 26 to 29, 30 to 33, 34 to 37 and 38 to 41. The weights were removed on Tuesday, that is the pressure. Then they were tested on Wednesday and Mr. Stryker and Mr. Taylor, I believe, were present when they were tested. They were also present when the joints were made up. I do not believe Mr. Stryker was there when the joints were made up. Dr. Grosvenor and Mr. Crosby were there when they were made up; Mr. Stryker and Mr. Taylor when they were tested,—I think it was Mr. Taylor, if I remember the name. As to how many days and what days were plaintiff's counsel and expert present at these tests and in preparation for the test, Saturday, which I think was the 25th; Sunday afternoon we took the weights off.

Mr. Macauley: Saturday was the 18th.

A. Saturday, the 18th; Sunday the 19th, Monday, the 20th, and then Mr. Stryker was there Tuesday.

Q. Were they not all there Tuesday?

A. They were all there Tuesday. Mr. Stryker and Mr. Taylor were there on Wednesday.

The last tests that were completed as early as Wednesday, that was No. 41. That was the eleventh group.

As to how the tests which we made up after Wednesday differed in respect to the manner in which they were conducted from the tests which we made up on Saturday, [fol. 152] Sunday, Monday and Tuesday, the manner of making up to the joints and testing them was the same.

Pressure was applied, the same. The only thing was that in the animal glue we used a smaller percentage of water and in one group we soaked the joints five minutes. In the other group we soaked them two hours. I think we have some of the test blocks I have referred to. As to how they are put together, the blocks are turned up around like that (indicating), that is, with a diameter to come as near one square inch as possible. Before sawing them in two we marked them with a chisel in the center, just a fine mark. I put a pencil mark on it for lining them up. We cut them apart, sawed with a hack saw and the joints were immersed. What we refer to as soaked joints, the glue is put in small glasses and the ends immersed for about an eighth to a quarter of an inch. With a brushed joint we just dab the glue on the top. These are put together, lined up as near as possible and a 50-pound weight put on top; balance on top; and another 50-pound weight on top of that. That is the way we put on the pressure to get the dead load direct. In taking it off, we lift off the weights and take the pieces and before they are tested the glue on the outside is scraped off. A micrometer is then used for three diameters. The average diameter is taken of the three and the area figured and the area divided into breaking load gives the stress per square inch. The holders for pulling these and to hold these to insure alignment is composed of two split collars which rest on these round shoulders. The collar is turned so that this fits it. Then at the bottom of that the head has a ball joint, what we call a ball and socket joint; and the same thing at the other end. That comes through the crosshead to the testing machine at one end by a rod extending down from the ball and one to the stationary head above, then to another rod which is free to turn at the top and bottom, the two ball and socket joints and two shoulders. In other words, six points of turning, made in that manner to insure alignment of the piece. Presurre is then applied very slowly, the beam kept balanced as near as possible until the piece breaks and the load taken. We used but two of the blocks (like defendant's exhibits A and B) in one test.

Mr. Rector: The two sample blocks which the witness has produced happen not to be mates.

As to the manner described of making the tests and whether they are the sort of blocks and sort of tests that are generally made for the purpose of determining the [fol. 153] strength of joints, why, that is one of our ways of testing the various products. The Forest Products Laboratory do not use the straight tensile test. They use the shear test, I understand. I was never down there—that is, glue the two pieces together and push them apart like that (indicating); a shear test. Well, in my opinion, the straight pull gives you the strength of your glue joint.

As to how long a time and how extensively I have been familiar with tests made in the manner in which I made these tests, I developed this, I think, about four years ago, something like that. As to how extensively it has been used at the Armour Institute, used altogether. All their tests are made that way.

As to the explanation of the fact that in many of the tests I have described there was a wide difference in the breaking strength of the several blocks of the same group using the same test, in some instances a difference maybe of five hundred pounds for the weaker up to one thousand or more for the stronger, that will appear in all glue joints that I have tested; you will get that variation. That result is frequently found in testing glue joints. It is customary in determining what the strength of the joint is to go by the average of a series of tests. That is common practice.

The Court: Really, is that very accurate?

A. Which, your Honor?

The Court: Might it not happen that the four tests which you made in one series might be the low test; that all four of them might happen to be the low test cases?

A. I do not think that would be true; no, sir. Glued joints vary in strength. They do not check as close—some groups check closer than the others. The area is one square inch. In putting them together if a small air bubble is in between, that decreases the area so much and gives a breaking point to start with. I think that is the explanation.

The Court: I suppose it would also be true if the mixture was not perfect.

A. Yes, sir.

The Court: If you had a granulated substance at all?

A. If it had a tendency to settle, I do not think it would. It might have. If you got a thinner mixture at one side of the pot than the other.

The Court: It is your idea then that a series of four tests gives you a fair average?

A. Yes, sir. Of course if you take twenty-five you may raise that average a little or lower it.

[fol. 154] Cross-examination:

If, on the other hand, you are trying to find out what is the maximum strength of a joint that glue is capable of producing under the most favorable circumstances, you would take the high ones if you want the maximum and cut out a lot of the others.

Regarding the series of tests No. 3 and No. 8, as to whether they were made up with different amount of water, the only difference in the amount of water would be the evaporation, if I said that. They were of the same pot of glue. As to whether I would expect any material evaporation of water in a short period in the two tests, why, it evaporates all the time.

When they close up Saturday afternoon and Sunday the temperature gets up around 80. The glue was not kept corked up in a bottle during that time; it was in the pot; that double boiler. I made no test to see how much water had evaporated from the glue in that time. Common sense would teach a man that water would evaporate in a warm room. I do not know with any degree of accuracy how much had evaporated, if any.

As to the amount of water used in making up that animal glue in series No. 3, it was two hundred grams of glue and four hundred and fifty of water. It is true that neither plaintiff's counsel, Dr. Grosvenor, nor Mr. Stryker, nor anyone representing plaintiff, so far as I know, was present at the test of block 42 and those that came after. As to whether I myself specifically asked any one representing the plaintiff or Dr. Grosvenor to be present at those tests, in making tests we test only for the man that is having the test made and we do not invite any outsiders. If the man that is having the test made wishes to invite anyone, that is up to him.

I have had no experience in factories in actually making and using glue.

Referring to the eighth series of tests and the eleventh series of tests made with animal glue, as to whether there was any difference in the amount of water in the animal glue used in those tests, I should say there was a slight difference in evaporation. 38 to 41 was applied—the load was applied after it was to the others. Those glues were applied on the same day about one hour apart I think. As to whether I would expect a substantial difference in the amount of water due to evaporation in that one hour, yes, sir. The blocks in the eighth test, 26 to 29, was as soon as the glue was warmed up. The glue had been chilled, that is, dropped down to jelly like, and we had to [fol. 155] warm it. I think in that test it was taken out about too quick. I made not accurate test to determine the difference in water content. Mr. Wendt mixed the glue in that test. The water content, it would be hard to tell how much was in the glue when it was dissolved.

TESTIMONY OF ROBERT M. BIRK, A WITNESS PRODUCED ON BEHALF OF DEFENDANTS AT THE TRIAL OCTOBER 29, 1919

I am a chemist. I received my education in chemistry at the University of Kentucky and the Massachusetts Institute of Technology. I am employed by the International Process Company.

As to whether I was present this morning when Mr. Huntley testified in reference to some tests which were made under his direction at the Armour Institute, I was present at the beginning of those tests. I delivered to Mr. Huntley a sample of mixed glue which I received at Holland, Michigan, from the West Michigan Furniture Company, and also a sample of glue base gotten from the same place, and a sample of caustic soda also from the same place. As to what these several products purported to be, the glue base was a sample, supposed to be a sample taken from a bag, and which was later mixed, and mixed glue was the product as mixed. The glue base was a sample taken from a bag of glue base supposed to be furnished by the International Process Company.

I am familiar with the glue base that is regularly supplied by the International Process Company. I had no reason to doubt that the sample which I procured at the West Michigan Company's plant was, in fact, what it purported to be. I am also familiar with glue made up in the regular way with caustic soda from the glue base supplied by the International Company. I had no reason to doubt that the glue which I obtained at the West Michigan Company's plant was, in fact, made up that way, fresh International Company's base. I delivered them and the caustic soda to Mr. Huntley.

I was present at the beginning of the tests in which these particular samples were used. As to whether I participated in the test or was merely an onlooker, I took some of the glue base and mixed it for use in testing, some of the glue base that I had gotten at the West Michigan Company's plant; and I converted that into glue by dissolving it in a solution of caustic acid which I also got at the West Michigan Plant. As to the sort of solution that I used, the percentage of caustic soda, I used eight per cent of [fol. 156] caustic soda on the glue base two and one-tenth of water to one of the base.

I was present at New Albany, Indiana, on the occasion when certain tests were made there with what purports to have been a glue called the Gerson & Sachse glue. I assisted in making the test and saw the glue mixed and used. I saw the water put into the kettle, the glue base added and the caustic soda solution added, the glue stirred until it came across, and it was then allowed to flow into the spreader where it was spread on panels until used up. Mr. Miner furnished the glue base, so far as I know. I do not know anything about it beyond the fact that he supplied it. I saw it mixed in the kettle with water. It produced a milky suspension in the kettle. About forty pounds of it were used. It was mixed in a regular glue mixer there in the plant. When the solution of caustic soda was added, it went through the regular well known process of coming across. That was a solution of six per cent of caustic soda on the glue base When the glue had been made and finished in the kettle, we opened the valves and allowed the material to flow down into the spreader. In that plant the glue flows directly from the kettle to the

spreaders by gravity, and that was done in this instance. I saw that same glue used on veneering. I cannot tell exactly how much veneering was run through that spreading machine and glued with that glue, but I can give approximate figures. There were about twenty-one panels, thirteen inches by thirteen inches, and something like seventy-five or eight panels that I think were thirty inches by twenty-two. As to what was done with those panels of veneering after they had been through the machine, the usual process was followed. The panels were run through machines, placed in piles with caul boards at intervals, and put under the hydraulic press. After they had been put in the press they were clamped in retainers and run out into the drying room on trucks. I next saw them on Monday, the 27th. They were glued up on Friday, the 24th, I believe. As to the condition of them when I saw them, they were apparently the finished panel I was able to identify the particular panels on Monday which had glued up on the preceding Saturday because I had marked them with my initials and I could recognize my initials. On Monday I took them and brought them to Grand Rapids. In fact, there were forty of them that I brought to Grand Rapids, the remainder I suppose were put through—they were left in the drying room as I left them [fol. 157] a while ago. The panels produced here are the ones I have been describing (Defendant's Exhibit E.)

Cross-examination:

Regarding the samples of glue and glue base which I went to the West Michigan plant to get, I did not take those samples myself. They were given to me by a workman there in the plant. I think I can give you his name in a second. One of the men was named Tuls and the other Schnormeyer, or something of that sort. As to whether one man gave me one sample and another man another, no, they were joint in the matter. As to why I did not take the sample of glue right out of the kettle or the mixer or spreader myself, the stuff was there for me and I took it. That was also true of the base and the caustic.

TESTIMONY OF FREDERICK E. HOOD, A WITNESS CALLED ON BEHALF OF DEFENDANTS, TAKEN AT THE TRIAL OCTOBER 29, 1919.

I am in the veneer business, glueing up panels and veneers. The name of our concern is Hood & Wright. I have been engaged in that business in Big Rapids about twenty-five years. We have used animal glue and also vegetable glue in that period. We first made an effort to use vegetable glue in 1911. That was Perkins vegetable glue. The result of that attempt to use vegetable glue in our working was not very satisfactory. As to how long did we continue to use it or continue our efforts to use it, about four months. We then changed back to animal glue and continued to use animal glue up to 1915. For four years after our efforts to use the vegetable glue we continued to use animal glue. At the time that we made our first effort to use vegetable glue there was not a great deal of difference between the price of animal glue and vegetable glue for veneer work. There did come a difference between them later. The difference in price between them when we finally used vegetable glue in 1915 was about three to four cents; that is between vegetable glue and animal glue that was known as veneer glue. The price of animal glue that was used for joint work was higher at that time. We used some animal glue in our work now for glueing up white woods, Bird's eye maple and delicate wood, because the vegetable glue stains the wood.

As to whether I know anything about the relative strength of the vegetable glue and animal glue in making [fol. 158] joints, not very much, no, sir. We do not have any joint work in our factory; all flat work.

TESTIMONY OF CHARLES WORFEL, A WITNESS CALLED ON BEHALF OF DEFENDANTS AT THE TRIAL OCTOBER 29, 1919

I am furniture worker with William A. Berkey Furniture Company; I have been connected with that concern going on thirty-six years; have been superintendent for twenty-five or twenty-eight years. As to what sort of

furniture that company manufactures, it is all high grade stuff. I have been familiar all the time that I have been there with the sort of glues that have been used by that concern in its furniture work. As to what sort of glues have been used, it is all hide stock of different kinds from different concerns. They have not used any other sort of glues than animal glues only just to try out samples. They have never commercially used any vegetable glues.

As to whether I have any acquaintance at all with the use of vegetable glues, I have made tests of them and went down to different factories and inquired,—well, I went down to one in particular and inquired the results they were having, and took the veneer man down with me. That was at Johnson brothers'. The result of my observation there, well, I didn't like—I didn't use it. I should think that was about four or five years ago.

We have continued to use animal glue exclusively. We do quite a lot of veneer work in our factory.

As to whether there is any difference between the grades of animal glue which we use for veneer and that which we use for joint work, we use just the one kind. The price of that glue, the cost of it today, I am not sure, but I think it is forty-five cents; forty or forty-five. I am not sure as to that. We use that same grade of glue in all of our work throughout the plant.

Cross-examination:

As to what portion of our work is veneer work as distinguished from joint work, well, we use about two-thirds more for veneer than we do for joint work; possibly more than that.

TESTIMONY OF CARL S. MINER, A WITNESS PRODUCED ON BEHALF OF DEFENDANTS AT THE TRIAL OCTOBER 29, 1919

(The witness after first stating his qualifications to testify as an expert in this case, testified as follows.)

[fol. 159] Q. Have you examined and do you understand the process and product described in Perkins Reissued Patent 13,436, July 2, 1912, being the patent in suit?

A. I have examined this patent and I think I understand the product which is attempaed to be described therein.

Q. What does this patent convey to you as a chemist specially skilled in starches and starch products?

A. The patent is on its face a patent for an improvement in the method of making a glue base and glue from starch materials, and it is quite obviously a two-phase, or as the inventor chooses to call it, a two-part process. In each of the two parts there are various procedures which he characterizes as steps. To quote his own words, after he has first stated and described the various objects of the invention, such as providing a glue and method of making the same from carbohydrates which will be exceptionally tenacious and powerful, but still amply fluid for easy application, and which can be economically and easily produced, and which has the further advantage that it may be practically used for the same purposes as the best animal glue and possesses certain advantages of permanency to weather and temperature variations far superior to those of animal glue, it goes on to say:

"A further important object of my invention is to produce an adhesive or glue base which may be stored or sold in a dry state and which may then be prepared for use by mixing up with or without the use of heat. Such improvements are of great practical and industrial advantage and importance as have been much sought. To do this I first take a carbohydrate of the proper kind and treat it with a reagent to decrease its water absorptive properties."

He there sets out in brief terms the first part of his process, the preparation of a glue base from a suitable carbohydrate body. To continue the quotation:

"Treat it with a reagent to decrease its water absorptive properties in the sense that to render fluid the finished glue, comparatively little water will have to be added and the final glue will not thereby become seriously diluted. The reagent I use I call a starch converting agent."

To turn aside again for an instant, in the starch art we call anything which changes the chemical nature or sharply changes the physical characteristics of the starch a "con- [fol. 160] verting agent." When we make glucose from

starch we say that we convert it with the acid used. He tries to explain the action of that agent, something that none of us really able to do yet. Continuing the quotation:

"The reagent I use I call a starch converting agent because it is believed it exercises, at least in part, a hydrolyzing or oxidizing or converting action similar to that of the well known starch converting agents, many of which have been used to convert starch into soluable starch and dextrin. I ay use any suitable starch converting agent, but the action I produce is preferably much less complete since it is not my object"—

and here he points out specifically the spot, not as specifically as he does later, but he does point out the spot in the conversion of starch where he wants to stop.

"I may use any suitable starch converting agent but the action I produce is preferably much less complete since it is not my object"—

that is referring back to the conversion of starch into soluble starch and dextrin; he says his action is much less complete.

"—since it is not my object to convert the starch wholly but only to effect its physical properties when put into solution or dissolved to form glue. The effect of this treatment is also that it decreases the viscosity of the glue produced with a given amount of water without detriment to its 'tack,' quick adhesive properties and cohesion. As a base I prefer to use the starch secreted by the cassava plant, which has peculiar properties and advantages for this purpose."

On the next page he states more specifically what he means by this first part of his process, namely the preparation of the glue base from a suitable carbohydrate. He says:

"In carrying out one embodiment of my invention I take the cassava carbohydrate or flour in dry form and add at least an equal weight of water. The starch is then agitated and heated to about 130 degrees F., which is below the bursting temperature of the starch. Then I slowly add from 2% to 3 per cent by weight (of the raw carbohydrate)

[fol. 161] of strong sulphuric acid. This may be considerably diluted if desired before it is added. The same is kept in continual agitation. The agitation preferably produced by thorough stirring is continued for from four to six hours after the acid has been added and then the acid may be neutralized by the addition of a small amount of caustic soda or similar alkali. The acid acts upon the starch or carbohydrate to decrease its water absorptive properties. As the acid appears to remain unchanged in the batch, until neutralized, I believe it acts catalytically to change the molecular condition of the carbohydrate without rendering it substantially soluble in water. However, great care must be exercised"—

and here again he points out the degree of degeneration.

"—great care must be exercised not to have the heat sufficient or the acid in such quantity as to put the starch or carbohydrate in solution. If the action of the acid and heat is carried too far the starch will be changed into dextrin, and will go into solution, and as such it would be lost to my process, as I utilize only the suspended material."

It is perhaps interesting to know that the process he sets out here is the process which has been used, to my own knowledge, for more than fifteen years to produce thin boiling laundry starches; that is, the suspension of the starch in water in the presence of acid and heat, but heat insufficient to gelatinize it, and the result is controlled by the degree of acid, by the degree of heat, and by the length of time. The common laundry starches as made for corn were, as early at least as 1903, made in this way, except that they are degenerated further than the product which would be obtained by the method given here. The method, however, differs only in degree from that commonly used for the production of laundry or thin boiling starches. This, he says, forms the first part of his improved process, and the various steps therein may all be carried out at the factory. By that I presume he means the factory where the glue base is made, not the factory where it is utilized for gluing; because he says:

"In commercial use I preferably ship the dry material, obtained as above, to the consumer who carries out the

second part of the process at the place where the glue is to be used, but if desired—"

[fol. 162] Mr. Rector: At what point are you reading from?

A. Page 2 at line 90.

"—to the consumer who carries out the second part of the process at the place where the glue is to be used, but if desired the first and second parts of my improved process may be carried out together."

Then he goes on to describe how the second part of the process is carried out:

"In carrying out the remaining steps in the preparation of my improved glue, the dried base (line 95, page 2) obtained as above, is mixed with about three parts or less by weight (of dried base) of water according to the strength of the joint and economy desired. The dried base does not materially go into solution in the water unless heat is applied, but a liquid suspension is thereby formed which is agitated and treated with a solvent of cellulose, as for example, an acqueous solution of caustic soda or potash alkaline to phenolphthalein, using if cold from six to ten per cent of the weight of the dry base, of caustic soda or its equivalent of caustic potash."

At another point in the patent, namely at lines 40 to 47 on page 4, he repeats the injunction to use from one to three parts of water, but adds the words "preferably less than four and one-half parts of water should be used in making the glue from the carbohydrate base." Obviously, calling attention to the fact that at times three parts of water may not be sufficient to make his material operate successfully.

The second part of the improved process is described again on page 3 at lines 90 to 105, and at that point he again calls attention to the amount of water to be used and also to the fact that the mixture may be heated and that the action of heat replaces a part of the soda.

While he has set out his specific method of preparing his glue base and has called attention to the fact at the very beginning of the patent that he takes a carbohydrate

of proper kind and treats it with a reagent, he makes the suggestion that he can produce his glue from grades of untreated cassava and other starches and conversion products; but he at no point tells anyone how to do this. He does not call attention to any grade that you can use for the purpose, nor to any proportions, and it appears plainly [fol. 163] from the context that the method he depended upon to produce a satisfactory product was some method of treatment with a reagent to decrease the water absorptive properties of the product. He does characterize his product quite definitely by calling attention in at least three places to the fact that the product must be stopped short of soluble starch and dextrin stages, and he also characterizes it by the fact that it can be formed into glue by using only from one to three parts of water, calling attention there to the fact that the more water used the greater the delay in drying.

He suggests certain other tests, a viscosity test, and certain solubility tests, namely, solution with water at two hundred degrees Fahrenheit, which solution is opalescent and cloudy, and in that connection he makes no suggestion as to the amount of water to be used, and at two hundred there is an extremely wide range in materials which would form opalescent or cloudy solutions with water at two hundred. He suggests another test, namely, that if the base is mixed with from two to three parts of water and subjected to heat of one hundred and seventy degrees Fahrenheit, it would result in a syrupy condition instead of a thick jelly-like mass.

Both of these tests I judge are intended to describe certain characteristics of the Perkins base not to be understood as injunctions as to methods of use. He is describing what his product will do, but is not suggesting that you apply that method to it if you are going to use it commercially. At the other points where he suggests the solution in caustic alkali he is telling you how he wants to use it commercially. His fundamental and final determining test is apparently the fact that it forms a glue with one to three parts of water, and I presume from the context, though he does not say so at that point, that he means with the use of the percentages of caustic soda which he has mentioned.

It is clear from the patent that he intended to use his product in the wood-working art. He calls attention to

its possibility for joints, especially on page five lines 10 and following, and at a number of other places uses language which undoubtedly indicates his intention to utilize it as a wood glue.

To sum up then: The Perkins patent describes a two part process of producing a glue for use in the woodworking arts; the first part of this process consisting in the chemical treatment of a suitable carbohydrate body, and the second part consisting in the solution of that treated carbohydrate body or glue base as it has been called here in from one to three parts of water with the use of six to fourteen per cent [fol. 164] of caustic soda or an equivalent amount of caustic potash.

Q. There are one or two portions of the specification which you have quoted which have not been defined. In line 60 at page 2 reference is made to "catalytic action." Will you please define, insofar as you can, that term?

A. At the recent chemical institute they gave up the morning to the discussion of catalysis, and I think there were fifty papers read either by title or complete. I did not have opportunity to attend, but to put it briefly, by "catalysis" we mean a process in which the agent which we call the catlytic agent apparently is not itself used up in bringing about the reaction; that is, we put the acid into this mixture; it brings about an action in the mixture, but the acid is all there as acid when we are through, it is not combined with something else, it has not been used up, its form has not been changed, but it has made something else change its form.

The Court: In other words, you change the log into chips, but you haven't destroyed the ax.

A. Exactly so, sir.

Q. In the matter which you quoted from page 1 of this specification of this patent is a reference to "hydrolizing or oxidizing or converting action." Are those terms synonymous?

A. No, sir; they are not; they are extremely loosely used here. He simply means that he has changed the starch.

Q. On page 2 of the specification of the patent, line 110, "an aqueous solution of caustic soda or potash alkaline to phenolphthalein" is referred to. Please explain this expression "alkaline to phenolphthalein."

A. To a chemist it is totally a superfluous statement, because that is the characteristic of any solution of caustic, that it is alkaline to phenolphthalein: that is, if you put a little of this complex chemical phenolphthalein into it, it turns red. It would have to be an indefinitely diluted solution before that reaction would fail to take place.

Q. You have referred to the use of diluted acids as converting agents. Is sulphuric acid a common agent for that purpose?

A. Sulphuric acid used to be common all through the starch industry, and you still find it described in most books as the agent used for making starch and glucose. The actual fact is there is very little used, because years ago they found there was a lot of arsenic in it, and in consequence it got into bad repute. Now days hydrochloric [fol. 165] is used for both purposes, glucose and laundry starch more than any other, but sulphuric acid has substantially the same action as hydrochloric.

Q. Given any required degree of degeneration, is there any difficulty on the part of a skilled chemist to arrive at that degree and then stop?

A. No, if the degree is clearly defined, which is always a very difficult thing in the starch art—if the degree be clearly defined the chemist who understands the nature of various starches and the expedients for modifying those characteristics, should be able to produce the product; in fact, that is the thing he is expected to do right along. The product is brought to him and has certain characteristics, and he is told to match it and is expected to do it.

Q. Have you read and do you understand the translation of the patent to Gerson & Sachse No. 167,275 of January 13, 1906, which I hand you?

A. Yes, sir; I think I understand it.

Q. What does this translation of the patent convey to you as a chemist particularly skilled in starch and starch manufacture?

A. A method of degenerating—I am using that term as it has been used here apparently to mean modifying physically or chemically the starch, it is a term that is not used in the starch art very much, and I may forget to use it, but I intend to try and use the same terminology that has been used, insofar as possible—it is a method for degenerating

potato starch to form a vegetable mucilage or vegetable glue in dry form. It makes very specific suggestion as to the degree of degeneration, that is the same that Perkins suggests, just short of soluble starch; as Gerson & Sachse call it "between natural starch and the so-called soluble starch;" and describes two methods of producing the product, makes some suggestions as to methods of dissolving it, and gives at least one or two of its distinguishing characteristics when dissolved in certain fashions. That is in general what it means to a starch chemist. Would you like me to go into detail in the matter?

Q. If you please.

A. It is interesting in that it follows the same general method as — setting the method out as the Perkins method; first calls attention to the vegetable glue products on the market, and in this case he calls attention to the water content with which those are sold, that is, from fifty to seventy per cent water, which corresponds to a range of one of water to one of starch, to one of starch to two and [fol. 166] one-third of water. The copy I have is not numbered as to the lines, so I can't call attention to the lines, but in the second paragraph he describes the disadvantages of this wet vegetable blue which is on the market, and then says that he has produced one—he modestly puts the thing in the third person—"vegetable mucilage in dry form has been successfully prepared," but he obviously refers to his own product, and then gives one of the characteristics of the new product, and that is in the fourth paragraph. He says:

"The new product is soluble in boiling water, and then forms a substance similar to gum tragacanth as well as to the so-called vegetable glue, which is very suitable for purposes of dressing."

I understand him to mean that if you desire to use his product for dressing cloth you can dissolve it in boiling water and that in that solvent it forms a suitable material for such a purpose. He goes on to set out some of the chemical principles involved, which does not appear of importance to go into here, and in a paragraph considerably further on sets up two methods of producing his product, which he has said earlier is produced by the action of an oxidizing agent from free chlorine or peroxide in the pres-

ence of caustic soda. The first of these methods suggests the use of one and a half parts of sodium peroxide in a hundred parts of water with the addition of enough sal ammoniac, which is ammonium-chloride, to reduce the percentage of free sodium hydroxide to one per cent. What that means is that when sodium peroxide is put into water, hydrogen peroxide is formed and sodium hydroxide. Therefore he would obtain about a weight of sodium hydroxide to the weight of sodium peroxide put in. He wants to reduce that to one part, from one and a half down to one part by the addition of the weaker alkali sal ammoniac, by which procedure he would probably—he thinks he would have, and I suspect he is right—he would have sodium hydroxide and ammonium peroxide in solution. To that solution he adds a hundred parts of dry starch mixed thoroughly and allows the chemicals to react on the starch for a period of 24 hours. He then washes out the chemicals with water, removes as much water as possible by mechanical means and dries the treated starch, the glue or mucilage base, at a temperature in the vicinity of 100 degrees Fahrenheit; that is a very low temperature. He dries at a low temperature probably [fol. 167] because every chemist knows that if very wet starch is put into comparatively high temperature driers it will be gelatinous, and you will have lumps in it that will never become soluble again. Now by that procedure he expects to get a dry vegetable mucilage or glue, and he tells us that that material is characterized by the fact that he intends evidently to show its relative water absorptive capacity, when he says near the end of the patent, the third from the last paragraph, that—

"When dissolved even in the proportion 5 to 100 in water or 2% caustic solution, a thick very mucilaginous liquid which is neutral and free from ash"—

is formed; that is, he is giving you, as Perkins did, one of the tests which characterizes his glue or mucilage base. In the paragraph just preceding, the second preceding the one where he describes his method of making it by sodium peroxide, he tells you something further about it, and suggests two methods of dissolving. He says:

"The product, washed and dried, becomes a milk when it is mixed with water."

Just as the base that we looked at yesterday over in the factory made, when mixed up with water, a milky mixture.

"becomes a milk when mixed with water, like raw starch, and forms in boiling water as well as in cold caustic solution a thick slime."

That also is similar to the characteristics of the products we saw yesterday, the slimyness of the material as it appears after it has been dissolved with caustic soda.

He sets out a process of producing vegetables or glue base by two specific chemical procedures, both of which are intended to modify it to a point between natural starch and soluble starch, and he gives us a number of tests by which we may know that this product is the one he contemplates; and in addition he tells us methods by which it may be dissolved for use. Having called attention to the fact that vegetable mucilage found on the market contains from 50 to 70 per cent of water, I judge that he has intended his product to be utilized in somewhat the same way.

[fol. 168] Q. Will you please state, as indicated in this patent, just briefly the extent to which the degeneration is to be carried.

A. Of course the most certain indication of the extent to which the degeneration is to be carried is the exact method which he has set out for producing the thing which he claims to have invented; that is, treatment with the sodium peroxide and ammonium chloride solutions in the strength and for the time which he suggests. That is the specific way of finding out whether you have produced what he plans to produce, that is, take the starch which he has in mind, potato starch, and treat it in the way he says to treat it and your product must be the product which he has described.

Now there are certain subsidiary tests, such as the fact that it makes a thick mucilaginous solution when dissolved 5 to a 100 in water or two per cent caustic; a thick slime when dissolved with cold caustic or in boiling water, and that dissolved in boiling water it forms a substance similar to gum tragacanth.

Q. Will you now please compare the product produced by this process described in the patent with the product, the glue base, of the Perkins Patent in suit?

A. A product made according to this Gerson & Sachse method, in which he uses sodium peroxide and ammonium chloride, when ordinary potato starch is used as the starch material, is a product which requires more water to make exactly the same fluidity, than the product made according to the Perkins method set out in the specification. It does, however, meet the requirement that with caustic soda solution it makes a glue when less than 3 parts of water are used; in fact, made up with as little as 2 1 10 parts and 6 per cent of caustic, figured on the basis of the weight of the glue base, it makes a glue which flows readily and shows substantially all the characteristics of the Perkins glue base.

The Court: I don't know whether I just understood you. The first part of your answer seems to contradict the latter part if I understood it rightly.

A. No, I think I can perhaps make it clear by saying this: It makes a thicker product, made up in exactly the same way it makes a thicker product, which is demonstrably thicker than the product made exactly according to this Perkins method. The best way I have of discovering what Mr. Perkins meant is to follow his method exactly. It is distinctly thicker than that, but made up with less than 3 parts of water—notably I have used two and 1 tenth to one and 6 per cent of caustic—it flows readily; in fact, I have [fol. 169] put it through 2½ inch pipes as against the four inch pipes we saw used yesterday; that is, there is a range within the description which Perkins has given in his patent, there is quite a wide range of possibility, and the thing that is appreciably thicker in mixture than his product may still come within his description, that is, his description is materally broader than his specified method and includes a range in materials on both sides of that one which he has described.

The Court: Then if I understand you rightly, it is this: If made up according to the preferred method of the Perkins patent the product of this German patent will be much thicker than the Perkins patent made in the same way.

A. No, not much thicker; enough so that you can see the difference as you lift the two.

The Court: Well, discernible.

A. Discernible, but only a little.

The Court: And at the same time if it be made up according to the preferred formula or method it will still be a glue with the—well, necessary fluidity.

A. It will sir.

The Court: Is that it?

A. It is.

The Court: Then I understand it.

Q. Mr. Miner, will you please compare the outward appearance and physical character of the product of this German patent with the physical appearance of the Perkins patent.

Mr. Kenyon: If your Honor please, instead of using the word "product" which may be indefinite and may refer to the base or may refer to the glue, let him specify whether the witness' attention is called to the base or to the glue.

Mr. Macauley. To the base.

A. Both are white dry products, powdered or not depending upon whether the operator has ground them after drying, and having the general appearance and ordinary characteristics of starch, not discernibly different from ordinary potato starch, because that they are both—because of the peroxide treatment, which is a very powerful treatment—they are both very highly bleached and white.

Q. Have you made up any of this Gerson and Sachse base and can you produce a sample of it?

A. Yes, I made it up and I have a sample here.

[fol. 170] Mr. Macauley: The sample is offered in evidence to be marked.

(Sample referred to was marked defendant's exhibit F.)

Q. Will you please describe how this material was made and what, if any, tests you put it to?

A. This material was a part of a 50 pound batch of potato starch purchased from Stein-Hall & Company in Chicago and was mixed up with 50 pounds of water in which had been dissolved three quarters of a pound of sodium peroxide and sufficient ammonium chloride to reduce the free caustic soda to one half of one per cent. The starch and the solution were thoroughly mixed, and during the mixing very great foaming takes place; that is due to the decomposition of the peroxide, the hydrogen peroxide form

breaks down very readily, as I have reason to know; I ran a peroxide mill once; you have something at night and you come in the morning and it is not there, it has gone off in the air. That is what happens here, it goes off very rapidly, you have a big head of foam on it by the time you get it mixed. As soon as it was mixed it was allowed to stand at the ordinary room temperature, which in my laboratory is likely to vary from 65 to 75 Fahrenheit. It stood at that temperature for 24 hours. At the end of that time the liquid which had collected above the settled starch was poured off and it was washed twice using about 140 pounds of water each time. It was not centrifuged as Gerson & Sachse direct, because centrifuge adapted to that small or that large quantity is not available usually; I therefore pressed out what water I could by holding it up inside of canvas and pressing it in an ordinary letter press. The starch in that state had considerable water content, probably 40 or 50 per cent, but was dry enough to break up and crumble, and it spread out on suspended layers of cheese cloth, shelves of cheese cloth, spread out so I could get at it easily, in thin layers, and subjected to a temperature that ranged from about 95 to 100 degrees Fahrenheit for about 36 hours. At the end of that time it was dried to the condition to which the sample here shows.

Q. After allowing the mixture to stand 24 hours did you neutralize it?

A. I overlooked that step. I did neutralize it with 5 per cent hydrochloric acid to a point where it was just neutral to phenolphthalein.

Q. What did you do with that batch of material that you made up.

[fol. 171] A. I took that batch of material to New Albany, Indiana, and there mixed a portion of it with 2 1 10 parts of water, 6 per cent caustic soda, and utilized that glue for gluing veneers.

Q. When was this done?

A. On October 24th.

Q. How was it utilized in gluing veneers?

A. Used in the ordinary machines, to make up samples which Mr. Birk has produced, and after we got through with that we started to throw it out, and the foreman demurred and insisted on running some of his regular stuff

with it; so he ran with that batch 80 pieces of panels 5 ply which measured 20 by 33.

Q. Do you know what became of them?

A. They went into the drying room. I asked him to save me some of them. He said he had no extras on the order, he couldn't let me have any.

Q. What became of the other panels that were made up besides the ones that the foreman put into the regular stock?

A. The other panels I marked with my name, and they are the ones that Mr. Birk has produced here.

Q. Can you identify them?

A. I can.

Q. And you do identify them?

A. I do identify them; yes, sir.

A. The machinery consisted of a mixer jacketed by the use of steam, although we mixed entirely cold. This mixer had revolving arms which stirred the product during the process of solution. There was an opening at the center of a little cone-shaped bottom, opening into a $2\frac{1}{2}$ inch pipe which led down to the mixing machine directly below. The mixing machine consisted of two corrugated rolls with a trough to hold the glue, and the veneer was fed between these two glue covered rolls as in the machine seen at the factory yesterday. Both machines were similar in general type to those which we saw yesterday, although not exactly the same machines. They were, however, the regular machines used at the New Albany factory.

The Court: Do you mean exactly what you said, that it led to the mixer, or was it the spreader?

A. The spreader.

The Court: You said the mixer.

A. I did. From the mixer to the spreader.

Q. How did the pipe from the kettle to the spreader compare with the pipe in the machine you saw yesterday?

[fol. 172] A. Much smaller; I judge the one I saw yesterday to be about four inches; the one at New Albany was $2\frac{1}{2}$.

Q. How did the flow of the glue correspond with the flow of the glue you say yesterday?

A. I should not have been able to detect any difference by visual examination.

Q. How did the appearance of the glue compare with the appearance of the glue which was used in the machine yesterday?

and all of the tests that have been referred to by the witness with the so-called Gerson and Sachse base, including the testimony of this witness as irrelevant and immaterial to any question of validity or infringement in this case. The ground of the objection is that the procedure of making furniture glue with that base, by the use of two and one quarter parts of water, I believe it was——

The Court: Two and one tenth.

Mr. Kenyon: Two and one tenth parts of water is a procedure not disclosed in the Gerson & Sachse patent, and it is therefore not material to any question of anticipation, and that it is not the process used by the defendant and is therefore not material to any question of infringement.

The Court: The objection will be noted and the testimony will be permitted to stand; the question will be disposed of at the final hearing of the case.

Mr. Kenyon: We desire both to reserve our rights by entering the objection here, and to give notice to the defendants that we will point out in the Gerson & Sachse patent that it is not there.

Q. Will you please describe the machine which was used at New Albany in making this test.

Mr. Kenyon: It will be understood that our objection continues to future testimony.

The Court: The objection will go to all testimony offered along this line and with reference to this patent or the product produced by the witness and used at New Albany.

A. The machinery consisted of a mixer jacketed by the use of steam, although we mixed entirely cold. This mixer had revolving arms which stirred the product during the process of solution. There was an opening at the center of a little cone-shaped bottom, opening into a 2½ inch pipe which led down to the mixing machine directly below.

The spread mixing machine consisted of two corrugated rolls with a trough to hold the glue, and the veneer was fed between these two glue covered rolls as in the machine

[fol. 173] seen at the factory yesterday. Both machines were similar in general type to those which we saw yesterday, although not exactly the same machines. They were, however, the regular machines used at the New Albany factory.

The Court: Do you mean exactly what you said, that it led to the mixer, or was it the spreader?

A. The spreader.

The Court: You said the mixer.

A. I did. From the mixer to the spreader.

Q. How did the pipe from the kettle to the spreader compare with the pipe in the machine you saw yesterday?

A. Much smaller; I judge the one I saw yesterday to be about four inches; the one at New Albany was 2½.

Q. How did the flow of the glue correspond with the flow of the glue you saw yesterday?

A. I should not have been able to detect any differences by visual examination.

Q. How did the appearance of the glue compare with the appearance of the glue which was used in the machine yesterday?

A. It was rather whiter than what they had there yesterday, otherwise it had the same clear transparent appearances, no substantial difference except an odor which is very characteristic of potato starch.

Q. What was the name of this plant at New Albany?

A. New Albany Veneering Company.

Q. Who were present when the test was made?

A. Mr. Wendt who has testified here, Mr. Birk who has testified here, and a force of workmen, the only one I knew the name of was the foreman, Henry Altagn I understood his name to be; there were a number of other workmen there whose names I did not know.

Q. Will you look at the Higgins patent, page 1167 of the Solva record. Have you read this patent and do you understand it?

A. I have read it and I think I understand it.

Q. What does that convey to you as a chemist skilled in the manufacture of starch and starch products.

A. It discloses that Higgins had in mind the production of a paste in a degree of degeneration somewhat greater than that contemplated by Perkins and by Gerson & Sachse; but it discloses also that Higgins was thoroughly aware that if he wished to obtain a product of greater adhesive power than the one which he gave a specific method for producing, it was merely necessary for him to carry the degeneration to a less complete point than in the method [fol. 174] which he specifies, and this is clearly explained on page 5 of his patent, beginning with the first line, where he says that:

"I here describe what I consider to be certain distinct stages in the transformation of the starch particle, which are, as follows:

First. The 'gelatinous' or simple 'swelled' state, such as exists in simple starch paste made with raw starch and hot or boiling water. The condition produced by the action of dilute cold solutions of caustic alkalies on raw starch is also merely the gelatinous condition and is substantially the same as that produced by the action of hot water. There is a second stage, however, in the transformation, which I call the 'glutinous' stage, where the starch loses its thick inert gelatinous form and becomes glue-like and fluent, capable of being spread like liquid glue and having an extraordinary adhesiveness, like glue.

Third. The soluble-starch state, where the starch particle is still more transformed, approaching a gummy condition, but not yet actually dextrine, and forms more or less pasty mixtures when sufficiently dense.

Fourth. The actual clear gummy or dextrine state, which is freely soluble in cold or warm water and forming dense permanently fluid solutions, either hot or cold.

Fifth. The glucose or sugar stage, intensely soluble in water.

Now the second and third stages are what are produced in my process and product, usually a combination of the two, although it may be almost wholly one or the other, according as the digestion has been arrested earlier or later, as already described. The greatest adhesive power of the starch, however, lies in the glutinous stage, which is a fact not heretofore properly known or appreciated."

And I want to add here that so far as my knowledge of the art goes, Mr. Higgins is the first worker in the field to call specific attention to the fact that just at this point, between raw starch and soluble starch, lies the greatest adhesive power of starch. Gerson & Sachse called attention to it later, and Perkins still later, but of them all Higgins is much the earliest worker to point out the specific point where maximum adhesive quality could be found. He did [fol. 175] not himself utilize that specific point in this particular specific method, because he says, "my product is a combination of the second and third," but he says, if you want the greatest adhesive power stop short of the third, get only the glutinous stage.

Gerson & Sachse say the same thing, between raw starch and soluble starch.

Perkins says the same thing, don't form dextrine or soluble starch. For that reason it is quite probable that Higgins had a very strong product, which, as he says, resembled liquid glue and had the extraordinary adhesiveness of glue. The product made under his specified method shows some of that characteristic, but is obviously beyond, just as he says it is, the point of maximum adhesiveness. He did, however, contribute a great deal of very accurate and valuable information as to the exact point of degeneration to be reached if maximum adhesive power was desired.

Q. I call your attention to the matter beginning line 26 page 4 and referring to the character of the product which the patent describes. Will you please state what that conveys to your mind as a chemist skilled in starch?

A. "I will mention, however, that some most remarkable adhesives can be produced by this process which can be readily substituted for glues and gelatine in many kinds of work. For example, when from five to seven pounds of corn starch to the gallon of water is used in the formula given a glue-like paste is produced which is almost equal to the best animal glues and has the most extraordinary cementing power for fibrous and absorbent substances, as it will unite wood to wood nearly as firmly as gelatin, that is, the joint cannot be separated without breaking the wood at some point, and it will also unite leather to leather or leather to wood, so that the leather will tear or laminate in attempting to separate the joints."

Like most of Perkins' statements are, this is quite clearly set forth and obviously indicates that he had a product which, as he says here, could be substituted for glue in many ways and had sufficient cementing power to unite wood to wood nearly as firmly as gelatin.

The Court: You misspoke yourself; you said Perkins, you meant Higgins.

A. Higgins.

[fol. 176] Q. What do you understand to be meant by "gelatin" in that phrase?

A. Gelatin is a very pure form of glue. Gelatin has now come to mean a form of glue pure enough practically to be used for food, that is rather free from disagreeable odor and from contaminating substances. It is rather a highly purified glue but has not the maximum strength of the very best technical glue.

Q. I call your attention to the remainder of the same paragraph and ask you to compare the product described there with the glue.

A. The description reads:

"This paste is of a pure creamy white, slightly translucent, and in general qualities it could be readily mistaken for a solution of the best gelatine except that it has a much whiter and more opaque color and has about the same consistency and flowing qualities in the cold that a strong solution of gelatin or isinglass has when hot, that is, it will spread with great ease and smoothness, does not sink into absorbents, and adheres at once and with great tenacity to almost all substances and is so very glutinous and tenacious that it will draw or spin out into ropy or silky threads when manipulated, so much so that it would be difficult to convince the ordinary observer that it is not a remarkably white and fine glue instead of being purely of starch cement."

That indicates, as does the preceding sentence, that he had a product which in physical characteristics, its general appearance and hairing out was extremely similar to glue.

Q. Do you understand isinglass in the matter quoted to mean the same thing as glue?

A. No, isinglass is a product made, I understand, from bladders of fish; I suspect there is not very much of it on

the market, not a large quantity of it produced, but it is really a glue in fact, but it is a specific kind of glue used for certain specific purposes.

Q. I now call your attention to German patent 114,978 to Brudder & Company. This patent was issued November 2, 1900. What does this patent suggest to you as a chemist familiar with starches and their manufacture?

A. This indicates that Brudder was attempting, as he distinctly says, to prepare a substitute for animal glue and [fol. 177] he does it by treatment with hypochlorite of alkali, which is an oxidizing agent, using that in a wet mixture, giving a rather exact formula for the production of his material. He apparently means to use it for some other purposes than dressing textiles, as well as for that purpose, since he suggests that if it is to be used for dressing colored textiles it may just as well be neutralized by a slight addition of acetic acid, he having said in his description of his method that it is to be slightly alkaline after drying. The product when dissolved in water is quite a strong adhesive; it is degenerated to a point further than the Perkins formula degenerates starch, and further than Gerson and Sachse degenerate their starch by either of their methods.

Q. In what strength of solution does the author propose to use it?

A. He says that the solution of the material occurs in a way similar to the solution of glue. To 100 parts by weight of water are added 20 to 50 parts by weight of the adhesive. 50 parts by weight of the adhesive to 100 parts of water would give quite a thick glue mass, but it would not be so thick as either of the solutions of Perkins glue base according to Perkins' method, or of the solution of Gerson & Sachse in the cold alkali which they suggest.

The Court: That would be 2 to 1 instead of 2 1-10 to one.

A. Yes, but it is a further degenerated starch.

Q. What statement do you find in the patent indicating the strength of the adhesive obtained?

A. The claims says:

"Process for the preparation from starch of an adhesive material comparable with animal glue, consisting in the following."

Then it sets out his method of making it. The words "adhesive comparable with animal glue" indicate that he felt he had a product whose characteristics were in the same general class as those of animal glue, and undoubtedly he intended to include strength among those characteristics.

Q. I call your attention to a translation which you have of an article headed, "Apparatine" in Encyclopedie Roret; it is on page 1,307 of the Solva record, and I ask you to state what that conveys to you as a starch chemist. [fol. 178] A. This is a clear description of a method which is still used for the dissolving of starchy materials where caustic alkali is to be the sovent used. It says, to quote,

"The best proportions are 76 parts of water, 16 of potato starch and 8 of caustic potash or caustic soda marking 25° Baume."

There is no question but that he intended, I believe, to use raw starch. He goes on to say:

"One should stir while pouring the starch into the water."

That is, in order to bring it to creamy consistency. To continue the quotation:

"The stirring should be continued when adding the lye. After a short time the liquor suddenly becomes clear and furnishes a thick jelly which must be beaten; the more it is beaten, the better the quality of the apparatine."

That is, he describes the same method of dissolving the starch which we saw operated yesterday, with the exception that he does not suggest the addition of heat. He does set out the method that has been known for many years of dissolving starch materials in caustic alkali with thorough stirring until the point where they become clear or practically reach the maximum point of solubility for the mixture present.

Q. How does this description compare, in your mind, with what we saw yesterday at the Berkley & Gay Furniture Factory of the "coming across" of the starch material?

A. It seems to me quite an accurate description of the thing we saw, that is, the clearing up, becoming transpar-

ent, which is characterized as "coming across" in the Perkins patent.

Q. What are the most common starches in commercial use in this country and in Europe?

A. Oh, among the commonest starches are corn, the commonest in this country; potato, wheat, cassava, rice; all of those are used commercially for various purposes; in fact, rather interchangeably, depending on the product desired and on the expense that it will stand. There is a big variation in price among those starches, but all of them are used, all of them are available.

[fol. 179] Q. How do cassava and potato starches compare for the manufacture of adhesives or glues?

A. Both potato and cassava are starches which make specially thick mixtures with water, that is, as compared with corn starch or wheat starch, as examples, and both of them in my experience make stronger adhesive materials than does corn starch, with which it is naturally common to compare it, because corn starch is the commonest and cheapest in this country.

Q. Do you know which is the commonest starch in Europe?

A. Potato starch is the commonest, I understand, especially in Germany. They use it there to produce glucose for the same reason that we use corn starch here, notably because it is the cheapest starch available. They also use it for the production of alcohol, as we use corn starch.

Q. Is potato starch well adapted for the manufacture of adhesives or glues?

A. Judging from my experience with the production of a glue according to the Gerson & Sachse method, I should say yes.

TESTIMONY OF DR. WILLIAM M. GROSVENOR, RECALLED ON BEHALF OF PLAINTIFF IN REBUTTAL OCTOBER 30, 1919

Direct examination by Mr. Crosby:

Q. Doctor, the defendant's expert, Mr. Miner, referred to the statement in the patent on page 4, line 45, to-wit: "Preferably less than four and one half parts of water should be used in making the glue from the carbohydrate

base." Will you please state what you understand is meant by that.

A. It would appear to me that that is a misprint. I have met a number of instances of such errors. The French patent to Verneisel, corresponding to the German patent to Gerson & Sachse, is almost verbatim the same patent except in the latter part of the patent where it states the precise conditions it says 200 instead of 100. The context, however, makes this perfectly clear in that case, and it would seem to in the case of the Perkins patent, because on line 40, just preceding the passage referred to we find,

"When treated in accordance with my process, I find that the carbohydrate glue base may be formed into glue by [fol. 180] using only from one to three parts of water, the more water used the greater the delay in drying."

Preferably less than two and one half would be the only natural expectation there that should be used. This is the medium between 2 and 3. It is the interpretation that is best in harmony with the statements on page 2 line 123, where in giving a specific example he says:

"100 pounds of the base was mixed with from 100 to 300 pounds of water (preferably 225 pounds or less.)"

That is two and one quarter. Such an interpretation also is entirely in harmony with all the specification instructions and the precise limitations given in the claims.

Q. If I am correct in understanding your answer, you feel that should be two and one half instead of four and one half.

A. It should, in my opinion, be two and one half.

Q. The defendant's expert yesterday referred to one of the tests in the Perkins patent, that test in which the Perkins base is asserted to produce a cloudy solution at 200 degrees Fahrenheit, in lines 38 and 39 on page 4, and defendant's expert said that no particular amount of water was mentioned, and as I understood it intended to criticize the test, as, therefore, being indefinite. Will you please state what your opinion is in that regard?

A. That the test there stated is a test for determining whether the base has been too far degenerated and has be-

come wholly solubilized starch, that is, starch which on being subjected to the action of water at between 200° and the boiling point goes into a clear complete solution. The test is a well recognized one, and the proportions of water used, within wide limits, make very little difference, so that the description given there is ample for any chemist to determine what the man means.

Q. Doctor, were you present at the Armour Institute when certain tests were literally carried out by the defendants in which block joints were glued up with samples of alleged defendant's glue and animal glue on October 18, these tests running through into Tuesday of the next week?

A. I was.

Q. Did you obtain samples of the animal glue being used in those tests?

[fol. 181] A. I took a sample.

Q. Will you please explain what sort of a glue that animal glue was to your knowledge?

A. It purported to be Armour glue and was spoken of as Armour's No. 1 hide glue. I have here a list of Armour's glue products to which I wish to refer in my testimony. The No. 1 Armour glue is not a hide glue, and this was spoken of also as a hide glue. It did not look to me like a No. 1 glue that I wanted to ascertain what it was, so I went to Armour's plant and compared it with Armour's samples. It was not found to be any grade of Armour's make, in my opinion, and this opinion was confirmed by their expert, who however did not criticize the grade of the glue at all, except that it was an excellent grade of glue, which is just what it seemed to me. The sample, together with samples of Armour's products that were fresh, were taken to New York and compared with the Armour products. The glue which was used was practically identical with Armour's special highest grade glue about one third higher in price than any of the veneering glues. So that what we are dealing with as a standard of comparison in the tests that were made in Chicago, is the very upper limit of glue strength so far as the glue selected was concerned.

I may explain that that circular which I have given your Honor is partly mutilated along the right hand edge be-

cause they asked me to remove the list of prices before making any use of it.

Q. Was the glue which you found the defendants using in those tests a hide glue or a bone glue or what?

A. It was a hide glue.

Q. You stated that it compared very closely to the highest grade of Armour's hide glue, is that correct?

A. Substantially identical.

Q. By what marks is that indicated on the circular which has been handed the Court?

A. The AB grade.

Q. The AB grade?

A. Yes, sir.

Q. On that circular are there any indications as to what the various grades are suitable for which agree with the fact, as you understand it?

A. There are.

Q. Is the AB glue given as a glue suitable for furniture veneering?

A. It is not.

[fol. 182] Q. Is it your opinion that it is not a glue which would be suitable for all around furniture veneering, considering the cost and other things?

A. It is not; it would not be so used.

The Court: You mean that simply because they could use a cheaper grade and it would be just as good for that purpose?

A. Yes, and in some respects it would be better, I do not mean to say this glue could not be used and used successfully.

Q. Your point is, as I understand it, that some of the lower grades are better for this veneering work than the higher grades?

A. Yes, sir.

Q. The higher priced glue?

A. Yes.

Q. Which grades on that Armour list are suitable for veneering?

A. X3, X4, No. 1, No. IX, CXX, and for low grade work, cigar boxes and that class of veneering, CX.

Q. Will you state which ones are hide glues and which ones are bone glues, and which ones are other glues?

A. X3 and X4 are hide; No. 1, IX, CXX, CF and CX are bone.

Q. I meant, take the whole list and state which ones are hide and which ones are bone.

A. The upper six are hide, the last two are special grades and the 7 preceding the last two, as I understand it, are bone glue.

Q. I think it will make it clearer if you simply read the marks there and say: "These are hide glues," so we will know, so there will be no confusion as to what we mean by the upper 6 and so forth.

A. AB, BB, X3, X4 double minus, X4, triple minus, fall in the hide class. No. 1, No. IX, CXX, CF and CX in the bone class.

Q. What are those in between, what kind of glues are those?

A. No. 1 white, No. 2 white, No. 1 XX, No. IXX ribbon, as I understand it, are pigs' feet glue, which are now substantially unpurchasable.

Q. Where do the glues which you have pointed out as being suitable for veneering stand as to quality and price in these lists—that is, are they the highest or medium grades or what?

[fol. 183] A. The medium to lower grades, but for the class of veneering we are dealing with, that is furniture veneering, a high grade could work, not the lowest grades.

Q. Did you both witness the making up of the glues at these tests in Chicago and also the breaking of the joints which have been testified to by defendants, at least the first series of tests on blocks from one up to forty-one I think it is?

A. Yes.

Q. What is your opinion as to the care and reliability as to how those tests were carried out.

A. The conditions were not such as I would expect to find giving concordant or representative results, comparatively speaking, between two lots made at precisely the same time and in precisely the same way. One reason that has been mentioned for discrediting some of these tests, the presence of the oil in the wood, is illustrated by a sample block which I asked for, it being No. 13, and the spindle hole in the end is shown to be stained with oil, and by tracing the grain

around the side of the block it is apparent that the oil worked through and at the point where the block was sawed, and has been described in the testimony from the Armour Institute. The oil does not, however, seem to me to have seriously affected the tests, because in examining the blocks I noted the extent to which this oil spot had developed on the face that was sawed, and the animal glue joints which were apologized for on the ground that they would be more affected than the vegetable glue by the pressure of oil, of those blocks 3 had no oil spot at all, and the one that had an oil spot about very nearly half an inch in diameter, rather a large spot, was not by any means the lowest of that particular third series.

The Court: Just a moment, doctor. Have you, Professor Huntly that series of tests?

(A paper was thereupon handed to the court.)

A. (Continuing:) Block No. 10, according to my memorandum made at the time, and the approximate calculations from it, broke at 913 pounds per square inch, and that is the one that had the spot on it about one-half inch in diameter. 9, 11, and 12 were free. Turning to the preceding set, 5 to 8, only two blocks were entirely free of oil spots, 5 and 8, and while they are both high, they are not the highest of that series according to my own memoranda. No. 6, at 1732, is the highest, and that had an oil spot about three eighths of an inch in diameter. Also No. 7, which is the lowest of the series, had an oil spot about one eighth of an inch in diameter; and in the preceding series the last [fol. 184] two, which are the highest had no oil spots. The first and second one had respectively an eighth and a quarter inch oil spot. So that either accidently or otherwise, we seem to have very nice concordance with the size of the oil spot. However, it does not seem to me from a careful study of the blocks that that is by any means the controlling factor in this or in the succeeding ones. The faces of the blocks were hand sawed and a good deal of the refuse of the wood forced into the grain openings. The saw wavers as it comes down and at some points it cuts wider and others narrower, so that it leaves gaps of greater width between the faces. At the risk of taking a little time, there are some things about these glue joint tests that I think it is worth

while making clear. In order to get comparative and reliable results of what has been recognized as the thing we want to know, the best strength that we can get out of a glue when properly applied, there should be substantially no variation between the faces when brought together in the entire absence of glue; they should match, and match as two panes of glass do. The getting of that effect, and getting it without ruffling and scoring the block, is not an easy matter. It may be done in either of two ways; either by sawing at very high speed with a freshly sharpened saw, close teeth, very little set, so as not to pull out chunks, but to plane out small sections, or else, by shaving in some way across the face of the block, taking care to keep that face plane during the process. The importance of that sort of thing and the relative weight to be given to different factors is fairly well briefed on page 5 of the publication "Glue" that has been referred to, the issue being that of March 1911.

"It is not an easy test to make joints in such a manner that the strength of the glue is indicated with reasonable accuracy through the test of the joint, and the difficulties arise from the various factors which influence the making of the joint. We can divide them in two classes as Major and Minor factors. The six Major factors are:

The strength of the glue.
The smoothness and true fit of the test joint.
The species of wood in the test piece.
The proportions of glue and water.
The initial pressure, when the glue is applied.
The amount of glue in the joint."

[fol. 185] The last two are interrelated because the greater the initial pressure with a given condition of glue, the more glue will be squeezed out.

"The Minor factors are:

The density of the test piece.
The temperature of the glue.
The temperature of the glued article.
The temperature of the cauls.
The temperature of the test piece, when pulled apart.
The pressure in the joining clamps,"

which is not the initial pressure, but the pressure which is held on the material throughout the clamping period.

"In addition, we must consider the dryness of the test block, the manner of applying the glue, the length of time the glue is allowed to soak in before the initial pressure is applied, the length of time the test pieces are left in the clamps, the time allowed for drying the water out of the joint, and the 'curing' or maturing of the test piece before the joint is pulled apart."

Those are spoken of casually, because I think certainly the last one may be almost presumed. As a matter of course, if the glue is not dry it won't give high pulls, that is obvious.

The Court: Really, what we are seeking to learn in the matter of these tests is whether in ordinary use this vegetable glue, claimed to have been discovered by Perkins is equal to or superior to the best animal glue, isn't it?

A. Yes, in the sense of the better grades.

The Court: Better grades of animal glue.

A. I don't mean the best or very fanciest grade that had been developed at that time or since.

The Court: No, I will modify my statement, the better grades.

A. The better grades. And these tests carried out over a long period, on many different varieties of animal glue and with very many samples of Perkins' glue, made in different variations under the patent, convince me as a technical man that it is equal to animal glue; but the overwhelming testimony is the testimony of its use in the same way that animal glue is used in furniture work, so long as we speak of the ordinary good grades of animal glue, because I have seen bent work and joint work of very excel- [fol. 186] lent quality being regularly done in the factory way by concerns of high reputation with the vegetable glue.

The Court: What I am getting at is this: Take this block used in test No. 13, as I understand it.

A. I beg pardon, that was block No. 13 which was never used in a test; I took it as a sample.

The Court: I misunderstood you, but the illustration is the same; take this block No. 13 which you have produced and will you not obtain a condition more nearly comparable

with the ordinary conditions under which glue is used by sawing the block in two and being careful to rearrange the block, or the two halves of the block, in the same relation that they were before they were sawed, than you would to specially prepare a surface, giving it the best conditions possible.

A. Possibly so, but I think not. The various factors entering in are so numerous, are so largely matters of personality with different operators, and you can't allow for all of them, and it seems to me it would be a mistake in judging a glue as such, to attempt to allow for any of it; it seems to me it would be wiser, knowing that the glue is commercially adaptable, to examine it and make comparisons under conditions in which the unknown variables are eliminated.

The Court: Of course these blocks are not at all comparable to the veneers.

A. It would be impossible to test the glue in a parallel way to the veneers.

The Court: You can't do that.

A. Because you would always be testing the wood rather than the glue.

Q. I think what the Court wanted to know in the prior question was, why you should expect any better alignment of the faces with your specially prepared pieces than you would with the sawed faces. The Court feels, as I take it, that with those sawed faces if you rearrange the blocks in the same position they were before they were sawed, you are bound to get an even fit, and the question is why don't you get an even fit, or do you, if you arrange them in that way?

A. Maybe I misunderstood the Court.

The Court: Not entirely that, but I would like to have that question answered.

A. As explained the width of the cut-out which the saw makes in sawing blocks that way varies considerably. Wood is subject to very little compression endwise of the grain, and it takes heavy pressures to do it, so that the slightest [fol. 187] deformation in the end grain surface leaves a gap in the joint, which is not parrelleled, where you are making side joints of machine planed work put together under the same heavy pressure, a 100 pound to the square

inch approximately, which is wholly ineffective to confirm the surfaces of an end grain one to the other. Is that what you are trying to make clear? Your Honor stated that was not entirely what you had in mind.

The Court: Not entirely what I had in mind. What I had in mind was the query as to whether you did not, for the purposes of a test of glue as applied to its usual use, ordinary use, obtain better results by the method which was employed in cutting in two a block and then placing the ends of the halves in the same relative position to each other that they were before being cut, than you would be specially preparing a block; in other words, by paning it or polishing it to remove the inequalities that exist ordinarily.

A. In planing a piece of wood to make a joint, in building up such joint work as we have seen, the surfaces are pretty well planed, pretty well trued by the large scale machinery that is used. We find it very difficult on a small scale to get even as good condition as they get, as a matter of course, on the factory scale. But those questions are matters more or less of opinion between different people who are examining glue. The broad criticism that I would make, and from which I have perhaps deviated too much, is that the joints which were made there were not dry when pulled. Those faces were examined after breaking, as we in our work always examined the faces of a joint to ascertain what we are working with, and the faces of those joints were found to be soft.

The Court: You mean by that, the face of the block itself or the glue?

A. The glue on the face of the block. Thank you. It was found to be soft. A rough approximation was made of that, a very difficult thing to estimate, but in a general way that estimate, made and noted while the block was being broken, rises and falls with the breaks; it is not wholly concordant, because there are many other factors that enter in, but in a general way that seems to me to account for apparent irregularities. One other fact makes a very much larger difference than is realized: In preparing our test blocks we strip away entirely all the exterior wood, so to speak cut a section out of the interior of our block. In making these tests a portion of the block

[fol. 188] was in some cases removed from the side where a large quantity of glue had collected so as to interfere with the placing of the clamps, but in many of the blocks that I saw—I can only speak of those—there was a skin of glue on the outer face of the block which would act somewhat like a thin sheet of cast iron fastened to the two blocks at its upper and lower edges as the blocks were held vertically in pulling. When we recollect that the strength of that glue material is in the neighborhood of 13,000 to 17,000 pounds per square inch, a very small film of that character becomes extremely effective on the strength of the joint being pulled.

The Court: In other words this would be true, would it not, using blocks No. 13, taking the two halves and putting them together, if you could do so tightly so that no glue could penetrate between the faces, but put glue on the surface of the rounded portion of the block, it would take considerable pressure to break it apart even then.

A. It would; that skin would be dry, and that skin is the dryest part of the whole joint, because it is exposed to the air.

The Court: There is another question that has been running in my mind for sometime. So far these tests are concerned, have we been ascertaining but one quality of this glue which goes to make up its whole quality as being superior glue, or a better glue, or otherwise? Isn't there something besides the adhesive power of glue that enters into the question as to whether it is a superior glue or an inferior glue to some other glue?

A. That is certainly true. What we call the cohesive and adhesive test on wood blocks is the nearest approach, perhaps, to an expression of the most important assemblage of qualities that we can separate out by themselves and measure, but as my testimony will indicate that is only one of the numerous factors that effect the commercial workability of glue in a practical way.

The Court: Well, for example, in making veneers or finished stock, after you reach a certain strength, so far as the practical question of quality of the glue is concerned, does it make any difference whether you have a glue of greater strength than that or not?

A. I think it makes practically no difference whatever. Of course the lower limit, what we call a certain strength,

must be high enough, but once that is reached then any overplussage is a matter of indifference, so far as I can see.

[fol. 189] The Court: Very well. I perhaps ought to apologize for interrupting again; it is a fault that I have.

Mr. Crosby: I am very glad to have you do so.

Q. Had you finished your observations regarding the Chicago tests, doctor? Did you discuss—I perhaps did not hear it—the dryness or dampness of the joints.

A. Yes.

Q. Now doctor, will you please take up the Gerson & Sachse patent.

A. Before doing so there is something I would like to add to that other answer, if I may. I am trying to be as brief as I can. The exceptional breaks which were finally obtained—I am not sure they were the last blocks—on the hide glue are, therefore, explicable (as deviating from the rest) in that they may have been more perfectly dried. I think in order to get any such test as that they would have to be perfectly dried. The more easy or rapid drying may be a question of the original dryness of the wood, the greater absorptive power of the wood, or the dryer condition of the point at which the blocks were standing during the 48 hours between the time of applying the glue and the time of pulling them.

The Court: If I may trespass again, there is one question I forgot to ask right upon that subject. Is there a difference in the rapidity of drying under the same conditions between a vegetable glue and an animal glue?

A. I think there is, if by the "same conditions" you mean the same dryness of wood, the same amount of glue, the same amount of water in the glue, and the same atmospheric conditions applying to remove the moisture entirely from the whole assemblage, I think the passage of the moisture out from the film of the glue in the joint is slightly slower. Our tests on the drying of films spread out on glass, and the parallel conditions at the same time, indicate a slight difference.

The Court: You say slightly slower. Which is the slower?

A. The vegetable.

Q. For those joints breaks which were alleged to have been obtained by the defendant with animal glue not in our

presence, which showed extremely high strength per square inch, if in those there had been any of these side films on the block, would that have affected those strengths?

A. It would certainly have affected them, and might have affected them very materially.

[fol. 190] Q. In what way, in which direction would they be felt?

A. Of course it would greatly increase the breaking tension of the block. The results are not so amazingly high that that must necessarily be presumed, because considering the quality of glue that was used and taking four or five breaks that way it is not impossible—it would not be impossible to get those results if the drying conditions were precisely right and the application happened to be as indicated, just right to get the highest strength. That is fairly well illustrated by some of the blocks in this series. (Handing exhibit to the Court.) These six successive blocks just as they happened to come one after another (that is samples tested of the Hood & Wright I. P. base) broke at 1360, 3170, 3265, 3045, 2945 and 3010 pounds per square inch. Those however are accidents, in a sense, and that must be taken into consideration. But they are not what we regard as the real indication (precisely as your Honor said) of whether the thing is stronger than the side strength of the wood, plus a comfortable percentage for safety.

Q. Those breaks you have just read you said were made from what glue?

A. The Hood & Wright sample of the Internatinal Process Company's base. A number of the joints went up to that point and did not then break. We are not particularly interested in the freak figures.

Q. I wish you would just explain from the blocks you have shown the Court how you glue up the blocks. It appears from some of these exhibits that finally they are much thinner. How do you get those from the block which you have shown the court?

A. The unbroken blocks just mentioned are part of the plaintiff's exhibit 38. For convenience in rapid working and in drying we place a series of blocks about two and one half inches long and about an inch and a quarter square one on the other, with the glue between. If we are making the test in such a way as to give the utmost benefit to a

weak jelly, diluted sizing material, so as to take the most conservative view of what it might do under the best possible conditions, we soak the joint for two hours, placing both ends of the block in the liquid and maintaining the bottom face of the block which is to be glued, removed from the bottom of the dish, because we would not be really soaking the face of the block if it were standing down on the glass bottom of the dish, because we would not be really soaking the face of the block if it were standing down on the glass [fol. 191] bottom of the dish. Incidentally, I may say that all blocks I saw soaked at the Armour Institute were allowed to settle on the bottom of the glass which, while it was slightly rounded, I think prevented the glue getting at the face thoroughly. We then removed the blocks from the dish and placed them end to end under a pressure which, in the case of very soft materials, is somewhat slowly applied to give them the benefit of the doubt, so they can't squeeze out. The pressure finally used is 100 pounds to the square inch. The blocks are then allowed to stand under that pressure for 24 hours, and are removed from under the pressure and sliced. Before gluing the blocks up, we have to bore two holes parallel to each other and at right angles to one of the long faces of the block, by means of which we are able to take hold of the whole block (or of sections cut longitudinally from the block) with a pin through each hole, and pull the two blocks apart. The usual method of procedure where we wish to make a number of joints and wish to make them carefully is to set up the column of blocks before we start to use them, adjust them, the one over the other until they stand as nearly as possible in a perfectly straight line (stand vertically). Then we mark the blocks all down one side so that we can always put them back into that position, and then saw the blocks of the size which I have here (and which is numbered 8 on one end and 9 on the other) so that they can go right back on top of each other in the same order; but instead of having the free faces which are to be glued tight together in the middle of the block between the holes, we have the block as shown in two pieces. Those free faces are glued together then, and when taken out from the clamps the block is set on a carriage, the pins of which are the same distance from the face of the saw, and the two sides which lie parallel to the

hole are removed by the buzz saw in order that the line joining the centers of the two holes shall pass exactly through the center of the face of every block that may be cut from that piece. The blocks are then sawed into two or three or four slabs at right angles to the axis of these holes, so that from one block we may obtain two or four small pieces for testing. We prefer these small pieces for testing because they can be very much more rapidly dried and more thoroughly dried. We can in that way remove all the outside material which has been dried unequally (and some of it is covered with this skin of dry glue, of which I have spoken) and also because the application of a steadily increased and gradually increased pressure, without any interruptions or breaks, is very much easier on a [fol. 192] small sample than it is, as a rule, in testing from heavy blocks.

Q. Doctor, will you now please refer to the Gerson & Sachse German patent, which has been referred to by defendant's expert and compare the process and product there described with the process and product of the Perkins patent in suit?

A. Gerson & Sachse patent 167,276 is for a process with caustic, and generally neutralized before use. All which undertakes to make only a vegetable mucilage in solid form. The liquid and more degenerated materials which are referred to in the first paragraph in the specification and on which he is improving, are the soluable starch sizes and textile dressings, which we will have occasion to refer to repeatedly, that were put into solution with caustic, and generally neutralized before use. All these products were commonly called vegetable glue, as they were adapted to substitute the diluted glue solutions used in the sizing and textile finishing, and after shipment were diluted for that purpose.

The patentees address themselves to a different technical effect; that is, the production of a substance similar to tragacanth, which is mentioned in the fourth paragraph and suitable for dressings, i. e., for textile finishing, for which tragacanth is largely used. Tragacanth has been tested and is unfit for wood glue. Gerson & Sachse's only proportion for the solution of the base, which, so far as

we can judge, he intends to ultimately apply, is 20 to 1 (that is 20 of solution to 1 of base) in either one per cent caustic soda solution or boiling water.

The Court: I don't know as I just understood that, doctor. You say 20 to 1.

A. The third page, second paragraph: "The vegetable glue in the dry form possesses the appearance of natural starch and has only 18 to 20 per cent water content, yields when dissolved even in the proportion of 5 to 100 in water or 2 per cent caustic solution, a thick very mucilaginous liquid which is neutral and free from ash." And since he was making a mucilage, since those are the only instructions given for solution, and since the vegetable mucilage is found on the market, that passage means 20 parts of water.

Q. Explain how that passage means 20 parts of water.

A. The "five" refers to the vegetable glue, his dry base. "To 100 in water" means that there is five pounds of the base mixed with 100 pounds of water in making the solution, or with 100 pounds of 2 per cent caustic solution.

[fol. 193] Q. What does that 2 per cent caustic solution mean, two per cent of what?

A. Two per cent of caustic soda in the 100 pounds of solution, there being 98 pounds of water in which the five pounds of base is to be dissolved.

Q. And two pounds of caustic?

A. Two pounds of caustic and 98 pounds of water in that solution. I beg your pardon. Yes, some of them say one per cent, some say two. The process of Gerson & Sachse has been repeatedly carried out; the product obtained corresponds exactly with the Gerson & Sachse description, goes into solution in the proportions recommended to produce the materials which he describes and which are adapted, by their physical properties, for use as textile sizes and dressings.

I have here a sample of the Gerson & Sachse base, a sample of base dissolved in hot water, and for comparison a sample of the tragacanth solution made up in the usual proportions for textile finishing. I have also a sample on the Gerson & Sachse base dissolved in twenty times its weight of two per cent caustic solution, and we will compare that shortly with some of the other sizing and finishing materials.

Q. If I understand you correctly, doctor, those are the final so-called glue products obtained under the Gerson & Sachse patent.

A. There are; unless you limit your patent by the statement that he is just making a solid vegetable glue, in which case this dry material is the product of the patent; but these are the products of the only further step which the patent suggests.

The dry products of Gerson & Sachse produces excessively contractile films. When dissolved as indicated and allowed to dry these films, in drying on the glass plates for examination, curl very badly, pull themselves apart and indicate their unfitness for work like that to which glue is applied. As we shall see, blocks made up with that material do not give satisfactory results, and our tests indicate that that is the main reason. The blocks even with the two hour soaking, could not be obtained averaging over 390 pounds, per square inch; penetration was very excessive; unless extreme care was used no material would remain in the joint. The viscosity was prohibitively small for regular practical application. The technical product to which his patent is addressed, and which it discloses, is totally unfit for wood-working purposes.

[fol. 194] Q. Doctor, will you next take up the Higgins United States patent 579,827, referred to by defendant's expert and compare the process and product there described with the process and product of the patent in suit.

The Court: Before you answer that question let me ascertain from counsel whether I understand the position of plaintiff so far as this German patent is concerned. I understood from the objection that was made yesterday that your position is that the patentee in the German patent, or that the patent itself does not disclose either the process or the product which Perkins discovered, in that it does not disclose either the proportions of the component parts, or the steps to be taken in producing the product.

Mr. Crosby: That is correct, your Honor. Perhaps I can elucidate, a little bit. Our position is that this Gerson & Sachse patent tells you, in so far as it tells you anything about putting the base in solution, that you must put it in solution with 10 parts of water or 10 parts caustic soda

solution to 1 part of dry base; whereas Perkins says 3 parts. They vary a great deal, and the difference is shown by just a glance at the resulting products. The Court of Appeals in Chicago and Judge Sanborn, as a matter of fact, held that patent not to be an anticipation for that reason. Now the point of our objection yesterday was this: The defendants instead of carrying out the Gerson & Sachse method, instead of using the ten parts of water which Gerson & Sachse prescribes, used two and one tenth parts of water; in other words, they used the Perkins second step and applied it to the Gerson & Sachse base. Therefore we say that was immaterial, because that was not carrying out Gerson & Sachse at all, but carrying out the Perkins invention, if anything.

The Court: In other words, it does not contain the disclosure of the patent in suit, either in the patent itself or by carrying out the process there described.

Mr. Crosby: That is correct.

Mr. Kenyon: The discovery that Perkins made, that that base could be made fluid with less than three parts of water and would then become a substitute for animal glue, was not made by Gerson & Sachse; it is not disclosed in their patent; although the instrumentalities may have been right under their feet they missed it. That is our position.

Q. Doctor, if you will now take up the Higgins patent.

[fol. 195] A. The U. S. Patent to Higgins, 579,827, is addressed to the making of a paste such as is well known in the library pastes or white mucilaginous materials used for mounting photographs, sticking paper together and such purposes. I have carried out the process many times in varying proportions under different conditions and compared it with the commercial product of Higgins. Some of the products I have obtained have been equal, and some superior, to the marketed form. It is described on page 1 line 80 as a soft or firm paste, and that is an accurate description of what I have obtained on every trial. The theoretical considerations which have been referred to on page 5 lines 4 to 78, and which have been commented upon as showing the extent to which Higgins "pointed the way" are perhaps correct theory, but the possibilities were not conceived. The practical possibilities to which that theory

might have led were not conceived, and are far from the facts actually realized by carrying out the process of Higgins. A number of samples have been tested; block strengths vary from 500 to 600 pounds, about a third of Perkins' or defendants' and less than half the required strength. The penetration and flow are both poor, penetration being irregular. We are dealing here with a mixture of refuse, partly dissolved portions of starch grain which under the microscope look like broken stone cement, and are full of materials that would plug up the pores and would prevent the heavy portions of the agglutinant, having body or viscosity, from getting into it. The extremely thin portions would go right along through such a block and would be taken up by the material behind and lost to the joint. The lack of homogen-ity of the material may be sharply contrasted if we examine the two photographs of vegetable glue, microphotographs of vegetable glue which I have here, and the two photographs of pastes. The films from which we try to learn something of the properties of the material are almost impossible to produce, because when we spread the material on a glass plate and let it dry it pulls itself all to pieces into granular form, showing excessive contraction of that portion of the material which is really soluble and has adhesive value, and the accumulation of the other material which constitutes the block or dark spots in the microphotograph.

Q. How does that sample that you have just shown the Court, so-called Higgins film—how does that compare with the Perkins glue? Where is the corresponding sample of Perkins glue?

[fol. 196] A. Higgins' film sample of the patent formula, "film broken up," is to be compared with exhibit 21 in evidence. By careful nursing it was possible to secure a piece of this film and to dry it between something that could grip it and pull it, and all we could get was about 153 pounds per square inch. These facts seem to me to clearly represent the dreamed of capacity of starch adhesives at that day, and if we compare these facts with the passage which has been dwelt upon, page 4 lines 30 to 59, we get some light on the meaning of that passage. It says line 33:

"Almost equal to the best animal glue and has the most extraordinary cementing power for fibrous and absorbent substances, as it will unite wood to wood nearly as firmly as gelatin."

Gelatin is a poor material for making wood joints; it is not up — the good grades of glue because of its contractile quality, and it is liable to overstrain the joints and to snap under stress. This fact is made clearer, however, when he goes on to say:

"As it will unite wood to wood nearly as firmly as gelatin, that is the joint cannot be separated without breaking the wood at some point."

If the joint is made with vegetable glue it tears away the fibers all over the side of a veneer in trying to separate the two lamina of the veneer, and if side joints are made, unless the very highest grade of wood is chosen, the blocks will go all to pieces before the joint will break, even if the strains are irregularly applied so as not to give the glue a fair even pull. Here and there, in other words, Mr. Higgins found some bits of wood pulled out. The actual strength of the material, as we have seen, is far less than the breaking strength of wood as a whole, less than half. Higgins says, therefore, a number of enthusiastic things, but the facts are that it is an entirely different product, not useful for woodwork. There is, in the Higgins disclosure no degenerated base; he does not dissolve it in alkali; the product contains no free caustic. The base is simultaneously pasted and changed, degenerated by the action of heat at the bursting temperature, and the base is not dissolved in a solvent of cellulose. The product of that solution has not the properties of animal glue or wood glue; it is not dissolved without acid, it has no true viscosity; is pasty, and his process is entirely unlike that of Perkins, and the product is entirely different. It is a patent taken out by a large manufacturer of starch prod- [fol. 197] ucts ten years before the Perkins invention.

Q. Doctor, will you please next consider the Brueder German patent 114,978 and compare the process and product there described with the process and product of the patent in suit.

A. Brueder patent 114,978 is a process for the preparation of a substitute for glue from starch. It is spoken of loosely as adhesive material. Throughout the discussion of these matters it is difficult to keep in mind the two quite varied means of the word glue. Animal glue is used among other things for paper boxes; it is used for calcimining, for sizing, for cooperage to prevent oil from getting through the barrels by sizing over the surface of the barrels with something that holds water. In cooperage, also, for loosely sticking together the heads, or was so used before it was supplanted, first by casein and then by other products. It is used in the making of paper collars and cuffs, by the dyers and cleaners in stiffening and surfacing (finishing) materials; by decorators in putting on paper, holding the plastic masses that they use together, and in sizing walls to prevent the adhesive that they put the paper on with from penetrating too deeply and drinking up too much in the wall. It is used in hat sizing, to stiffen the hats; in oil refining to help carry out impurities, and as mentioned to prevent the oil leaking through the barrels; in making paper, writing paper, wall paper and glazed papers. It is used in making up paints and clarifying oils; in helping to harden up plaster casts on the surface. It is used in finishing stiffening silks, and used in stiffening up window shades.

The solution of Brueder's product is said to be in a way similar to gelatin, which is more or less used in very much these same directions wherever its price will permit, and the proportions in this case are clear; to 100 parts by weight of water are added 20 to 50 parts by weight of the adhesive; in other words we have a range between 2 of water and 5 of water to 1 of the adhesive, and that is pretty much the range in which gelatin may be used. It says that it is not only similar to gelatin but has all the industrial properties of the latter. Gelatin is not industriously used for joint veneer work. It is used as sizing for high grade stuff where expense is a secondary matter. It is used for making films that, when kept moist, can be used for decorative purposes; when softened with glycerine or sugar or some other material of that kind they can be [fol. 198] formed and shaped. Gelatin has a variety of such uses, as well as the clarifying effect. Brueder's product is

clearly used as a sizing for textiles, finishing material; possibly as a food stuff. I have carried out the process a number of times, produced products exactly like those described; secured the products from Brueder & Company and found them to be identical. One sample of the product obtained is this sample labeled Brueder Minimum.

Q. That is the base, is it?

A. That is the base or dry product, which was the product Brueder aimed to produce. I have dissolved that in hot water in all sorts of proportions between the limits given. It makes, while hot, very fluent solutions, like gelatin; on standing, stiff heavy gelatinous products, and when the solutions are spread on glass plate and allowed to dry they go even further than gelatin in the direction of pulling and curling themselves up and tearing themselves apart. These samples of broken films which are submitted here throughout are, as nearly as possible, in exactly the condition in which they came off the plate, using the utmost care to remove them without breaking them, and removing them under the same conditions that the Perkins products were removed.

The joints made with the various solutions of this material, dissolved in hot water as Brueder suggests, broke, the average, at 730 pounds, and that was after, of course, very prolonged chance to fill up, after the two hours soaking. I might add that that at best is weaker than the wood, and about half that I think material that enters the veneering field should possess and less than two fifths of that which is exhibited by Perkins or defendants' products. The film strengths are uncertain; they broke up by contraction so as to make testing almost impossible. Some of the wooden blocks, approximately an inch in cross section, that were joined up with this material jumped apart without any pulling at all during the process of drying, as a result of the contractile strain that the materials sets up in its own drying, just as glass when it is heated and set aside to cool, after the blowing operations, will contract and subject itself to strains, and unless it is annealed to equalize those strains will almost always crack, during the process of cooling and sometimes fly apart in many small pieces. Not all, but a number of these joints did that.

The Brueder base is practically a soluble starch, and as an illustration of its character, here is the result of a test made a number of days ago as to its solubility. It is well recognized that those solubility tests on standing [fol. 199] are inclined to become faintly cloudy in that way, whereas if they are perfectly hot and fresh when examined, they are perfectly clear.

Q. Is that the 200° Fahrenheit test?

A. That is the 200° Fahrenheit test mentioned in the Perkins patent.

Q. What does that show in regard to that base, the Brueder base, that the base was degenerated beyond the Perkins stage, or within the Perkins stage?

A. Far beyond the Perkins stage.

Q. I think at this point you may show the court a sample of a similar test but within the Perkins stage.

A. Here is the similar test, hot water.

Q. Do these show the opalescent cloudy solutions referred to in the test?

A. Made with the Perkins base, produced by the acid process, and shows clearly the extreme cloudiness, and in this case gelatinization has supervened. When the test is made hot it does not have any such gelatinization, but we do expect substantially that cloudiness, and we do get it.

There is also here a similar example of the test made with the West Michigan Furniture Company, International Process Company base, which is likewise very cloudy and was, when freshly made, about as cloudy—perhaps not quite, but substantially as cloudy as it is now.

Likewise a sample of the Kane base obtained from the West Michigan Furniture Company, which also substantially represent its condition immediately after made and when hot.

These three exhibits are samples of the product which they represent, and demonstrate clearly that the International Process Company base and the Kane base were degenerated to substantially the same condition as the Perkins base.

Q. If I understand you correctly, the process of the Brueder patent produced a base which is far more degenerated than the base of the Perkins patent; is that correct?

A. Yes.

Q. Does the Brueder patent anywhere suggest the solution of that base to produce adhesive with the aid of caustic soda or the equivalent alkali?

A. It does not.

Q. Will you please next consider the publication Encyclopedie Roret which has been referred to by defendant's expert and to paragraph numbered 10 and compare the [fol. 200] process and product there described with the process and product of the patent in suit.

A. The Apparatine there described is clearly labeled with the tag of the art to which it belongs; Apparatine for "appretur," a French word for the "finishing" of textiles. It is called a vegetable glue, and is the prototype of the vegetable glues that we have been considering, so called, in the textile finishing and sizing arts, because ever since 1875 at least they have been used to replace the diluted solutions of the lower grade glues. Where the work would stand for the expense of gelatin, it was used for those finishing and textile purposes. The last paragraph of the reference, number 10, and the next to the last paragraph of number 11, clearly and properly locate all of these vegetable glues in the art to which they belong side by side with British gum and dextrin, because the end of section 10 says that the mass "is very suitable for the finishing of every kind of textile cotton, silk, wool, etc." "It gives an almost metallic stiffness to transparent textiles and it can replace all the other materials which are used for dressing, for thickening, etc." "Thickening" there refers particularly to the cal-co printing art in which thickeners are added so that the dye stuff resist, or discharge, can be printed on the face of the calico. Number 11 is illuminating in the fact that all the starches are regarded as more or less equally available for sizing and finishing and textile purposes, possessing special properties, but all falling in the class with equal value for their particular uses, and all substantially the same as the adhesive substance, the dextrin. In the last paragraph of page 1 of the translation it says,

"That is prepared from potato starch, either by slowly roasting the latter, or by letting nitric acid react cautiously on it, or by heating this starch with dilute sulphuric acid, as we described above, or finally by treating the starch with

an infusion of malt. This product, which takes after these various treatments the names of Gommeline, Amidulin, Aslacin gum, Leicome, etc. serves for printing textiles, for sizing chains," (which is the warp in the weaving operation), "for varnishing card board or other flat surfaces, for making adhesive bandages, in pharmacy and the like. All the materials just mentioned can be used in making vegetable glue but because of their high price the glue of the flour of cereals is generally preferred."

[fol. 201] The beginning of the next chapter of that translation is likewise instructive.

"The glue that one prepares from animal matter have quite a different importance in the arts."

There is no uncertainty about Roret. The product is made by direct solution with caustic and raw starch, and contains over five parts of water. It shows, after completion, the resemblance described by Gerson & Sachse, that is, dissolved sizing material. This is somewhat heavier, which checks up exactly with Gerson & Sachse expressed desire. It is fluid material which might be used in that condition, or might be further diluted or not (as it is given in some formulas) made more dilute for sizing and textile purposes. When first mixed it is a very stiff, rubber jelly-like mass. In that stage it is wholly worthless from both points of view, even for sizing. This mass must be beaten, by which I mean the violent, powerful agitation that is used in making up many of these swollen sizing preparations, and the more it is beaten the better the quality of the apparatine. Now that means the more fluid they get it the better it is for their purpose, the more penetrative it is in getting in between the fibers, and the more difficult it is to apply by glue machinery, until it shows the similarity to Gerson & Sachse. That takes a more advanced stage. More prolonged beating of that material would have thinned it further. That is, the more we follow the guidance and instruction of this disclosure the further we get away from vegetable glue in the wood working art, although we already have enough water in there to make it useless. It might be said, take a little water out. It says you can't, in the commercial sense. It resumes its properties when it

is wet, but it is the thin property which he is after, and those materials when dried and redissolved are slimy; they are of the textile finishing character; they are even less strong and ropey than that material, because that could have been carried very much further. (Witness referring to a sample which he exhibited to the Court.) The amount of water is grossly excessive and the hydralysis resulting from caustic in the presence of considerable water makes the joint strength too low. Although it is an excellent size, it is worthless as a veneer glue.

Q. Docor, will you next please refer to the Witt German patent No. 88,447, which was offered in evidence by the defendants and please compare that, or the process [fol. 202] and product there described with the process and product of the patent in suit. My recollection is that this is one of the patents not commented on by the defendant's expert.

A. I will be brief. Witt patent 88,447, prepares an opened up or solubilized starch; I have carried the process out a number of times. When the chocolate brown stage is reached which he describes, and the material is then separated and dried in accordance with his instructions, it gives clear solutions with hot water; in other words, as you make the product it corresponds with what he says about it and is a soluble starch. He gives no suggestion how to dissolve it to make anything; when I say "how to dissolve it," I mean in what proportions to dissolve it. He says, dissolving it in dilute alkali, but does not give any proportions of water whatever. The dry base is not the base described in the Perkins patent, and there is no suggestion whatever of the making of any kind of glue from it.

Q. Does that test showing solubility in hot water indicate that it was carried beyond the Perkins stage?

A. It does.

Q. So far as the base is concerned?

A. Yes.

Q. Will you now please refer to German patent 118,089, which was also offered in evidence by the defendants but not referred to by their expert, this also being one of the patents which defendants set up in their bill of particulars

as an anticipation. I think you had better take up first patent 110,957.

A. They will be more readily understood in that order.

The Court: Those not having been referred to specifically in the testimony beyond their introductions in evidence let me ask counsel if they rely on these patents to which no reference has been made in the testimony of the expert as anticipations.

Mr. Rector: No, your Honor. Those patents have been introduced largely for the purpose of permitting us to call attention to whatever statements are in there in respect to the general prior art with respect to the various kinds of starches suitable for this purpose, that is with respect to dissolving these starches with alkali, with solutions of caustic soda and so on. It only bears upon the general knowledge of the prior art with regard to this subject, but there is no one of them which is relied upon in itself as an anticipation of the Perkins patent.

[fol. 203] Mr. Crosby: It seems to me, in order that the Court may not misconstrue those patents in any particular, that it is important that we at least explain them very briefly; that is the only object.

The Court: Very well.

A. Bellmas 110,957, the patent states that it makes a completely soluble starch, and the product is described by its name as such. Having applied the method and produced the product a number of times, I know that he actually produces it. He gives no suggestion of conditions of solution to produce anything. I have treated it with the smallest amount of caustic soda solution required to put it into solution, and even then it failed utterly as a wood glue. The dry product is not the base described by the Perkins patent. There is no suggestion of any water proportions, and no suggestion whatever of any kind of glue.

Q. There is one other of these patents, the German patent to Kantorowicz No. 88,468. Will you please also refer to that, doctor, and compare the process and product there described with the process and product of the patent in suit?

A. Kantorowicz says in his patent that the product is soluble starch. He describes the test for its recognition.

He describes previously soluble starches as soluble in water only if four or three parts of water are used, and as we have seen those were the sizing and finishing materials. The only suggestion here is that he wants it more soluble than any previous soluble starch—that is, wants even more thin watery solutions than those obtained in other cases of using soluble starches which have been tested and proved to be useless as glue. The process he uses is, first, solution with alkali which acts, as he desires, to produce the soluble starch only when in very great dilution. It is well known that greatly diluted alkalies hydrolize starch, but that the more concentrated solutions of alkalies seem rather to combine with the starch and not to hydrolize it, to break it down. He then precipitates the whole solubilized starch out of this solution with magnesium sulphate. Kantorowicz when he put his base into solution, that is, his raw starting out product—it ought not to be called a base—his raw material into solution, he uses the hydrolizing action of dilute solutions on the material dissolved after being dissolved. This Perkins does not do. Perkins does not dissolve at all the product—his base. The action of hydrolyzing produced by Kantorowicz, on the other hand—when Perkins does dissolve in alkali—is carefully avoided by [fol. 204] Perkins by using concentrated solutions. If hydrolysis were going on continually in the solutions of glue, we would expect them to thin right down and get watery and quickly become useless; whereas, I have seen perfectly good joints made from glue that was months, and in one case over a year, old. Kantorowicz' process is the exact opposite of Perkins' in each of the two steps. The only method of solution of the final base which Kantorowicz gets at by precipitating this dissolved starch from the solution by magnesium sulphate, and which he describes as soluble starch—the only method of solution definitely described is in ten parts of boiling water, the same as other soluble starches were dissolved; in alkalies without any proportions; in zinc chloride without any proportions; in magnesium chloride without any proportions; in calcium chloride without any proportion, exactly the same as other starches are made up in the textile finishing and sizing arts, all of which are apt to contain these hygroscopic chorides like calcium chloride, that is, materials which take up water

to keep themselves damp and soft and flexible. They are used in the textile finishing and sizing arts, but he gives no proportion as to how much of these solutions to use. I have tested the process and have not obtained any product suitable for wood glue. Is is soluble starch. The process is not, in my opinion, commercially feasible for making a wood glue base at all. The product is not suitable for making a wood glue, and is not the base described in the Perkins patent. Kantorowicz has no suggestion of making a wood glue in his patent at all, because no definite proportions of water to be used for the solution, except 10 to 1, is mentioned. His product is more soluble than the ordinary soluble starch; is further beyond the lower limits set by Perkins. The dissolved product is described as non-viscuous. Its cementitious power—that is, the binding power for clays, whiting and other materials used in finishing paper, for instance; that is what we speak of as cementitious power—is less than that of the grades of animal glue which are used in that art. It is not suggested that alkali metal hydroxide has any advantages in dissolving it over the hot water, or any of the other solutions. When dissolved it is not semi-fluid, that is, highly viscous, but very fluent, and as he describes it, non-viscuous. There is no suggestion of its use as a wood glue, and in solution with these hygroscopic materials it would be extremely undesirable to try to use it.

[fol. 205] Q. There is just one other of those patents that I would like to have you refer to, and that is the other German Bellmas patent 118,089.

A. That is an addition patent to Bellmas patent 110,957 previously considered. It is really a process addressed to the separation of starch from the mineral substances and the cell constituents, juicy materials, cell-liquids, that occur in the potato or other source from which the starch is to be derived. The starch is treated to no particular point, with no particular question of degeneration one way or the other, except to get it white and so that it will be free from a lime and settle readily. It refers to the stratification of the starches. He says that it forms a more or less fluid paste with water. The product is suitable for the textile industries and other unnamed uses, such as products like this are commonly used for, in the fermentation industry for

instance, or in making sugars. There is no definite base that I could prepare. There was no definite solution to be prepared if I had a base, and there is no suggestion of making any kind of glue, even a sizing glue for the textile industries, because the textile industries include also the laundry working, and the mere stiffening of textiles with paste made up with boiling water, and for those purposes an extremely white starch should be used, as an extremely white or bleached starch is desirable in the general textile and sizing industry. No alkali metal hydroxide is used to dissolve the product. No solvent of cellulose is suggested for its solution, and no proportions of water are given.

Q. Have you also carefully examined the other prior patents and publications which have been offered in evidence by the defendant?

A. I have.

Q. Have you found in any of them any suggestion or disclosure of the Perkins method by which a starch base, degenerated to the point described by Perkins, is dissolved in about three parts or less of water with caustic soda to form glue as good as animal glue for veneering?

A. I have not.

Q. Have you in any of them found a disclosure of a starch glue as good as animal glue for veneering?

A. No.

Q. Doctor, in some of the evidence adduced by the defendants mention has been made of silicate of soda and casein as glues. Will you please state whether silicate of soda is a vegetable glue or an animal glue or what?

A. A mineral glue, not a vegetable glue at all.

[fol. 206] Q. Is it in any sense an animal glue?

A. Not in any sense an animal glue.

Q. Is casein a vegetable glue?

A. It is not. It is an animal product, in so far as it is a glue.

Q. In the degeneration of starch by any suitable starch converting agent, which product is arrived at first; the soluble solvent of starch or the dextrin?

A. To the best of our knowledge the soluble starch precedes—the formation of soluble starch precedes the formation of dextrin. Whether that is always complete we don't know, but practically speaking it is supposed to, always.

Q. A number of witnesses for the defendant have testified that, at least in their factories, they do not use the vegetable glue for joint work or bent work, but use animal glue. Will you please state whether from your knowledge, Perkins' vegetable glue, or other vegetable glue, is used for joint work and bent work.

A. I have seen them so used successfully and in large and very reputable factories.

Q. Can you give any reasons as to why the Perkins vegetable glue is not more generally used in joint work and bent work?

A. It is more difficult to apply in many cases, depending upon the width of the surface and the size of the surface, the shape of it. A highly viscous material is more difficult to spread evenly and smoothly even if you have an automatic machine that will do it; but I think the controlling reason is perhaps the delay that we have mentioned in setting up. Animal glue as used for that purpose sets quicker, so that it is possible to take off the forms or clamps sooner, that are used to hold the thing after gluing. In bent work, for instance, forms bent to the shape approximately that which the bent veneer is to take, have to be made, and a little delay in setting means the tying up of a considerable investment in such forms and the tying up of a considerable amount of space in the factory in such forms. I know of one plant that refers the vegetable glue for a particularly nice piece of work, to animal glue. They are getting very good results, at least so they told me. That has been my observation in looking over their work.

Q. Is the Perkins vegetable glue under the Perkins patent in suit capable of producing sufficiently strong joints for that bent work and that joint work?

A. Certainly for the joint work, and of course they now and then try to do bent work for which animal glue does [fol. 207] not hold very well, but it is sufficiently strong for the large majority of bent work in my opinion.

Q. Doctor, is it true that in the prior art there are patents purporting to cover adhesives of every degree of strength and for every purpose made from starch or starch substances?

A. No.

Q. Is it true that it was an established and well known fact prior to the invention in suit that all grades of adhesives, including glues, could be obtained from starch somewhere between raw starch and over-treated starch, just as they could be obtained from animal matter.

A. No.

The Court: Are you quoting from the findings of the Court in the other case.

Mr. Crosby: Certain statements of fact.

Q. Is it true that several or any of the prior art patents or publications hit upon or disclosed a starch glue good enough for veneering glue?

A. It is not.

Q. Does Higgins describe the principle of it?

A. He does not.

Q. Did he have it?

A. He did not.

Q. Is starch glue which is comparable with animal glue for all around veneering pointed out anywhere in the prior art submitted in this case?

A. It is not.

Q. Does the prior art submitted in this case show that prior to the Perkins patent application it was known what this glue was?

A. It does not.

Q. Is it true that Perkins was advised by the prior art that to obtain veneering glue from starch he need only secure glue with a minimum of water content?

A. No.

Q. The difference in the amount of water in the various starch products discussed in this case has been sometimes referred to as mere matter of degree, and the difference between adhesives, such as mucilage, sizing and so forth, and glue suitable for veneering has been referred to as consisting largely in the degree of dilution; is that a correct view of the facts?

A. Not in my opinion.

Q. Where do you find utilized in any process or product of the prior art the Perkins discovery that the high sticking power for wood characterizing animal glue in the [fol. 208] glued-up panel industry or veneering industry really existed in starch?

A. Nowhere.

Q. Where do you find disclosed in any patent or publication or the prior art, or utilized in any product or by any process of the prior art, the Perkins discovery of a wood glue comprising a starch or carbohydrate rendered semi-fluid by digestion in the presence of about three parts or less of water and having substantially the properties of animal glue in the glued-up panel industry or veneering industry?

A. Nowhere.

Q. Where do you find disclosed or utilized in the prior art the Perkins discovery of a process of making such a wood glue by submitting a starch material that is already partially degenerated, that is to the extent set out in the patent in suit, to the dissolving action of caustic soda or equivalent solvent in the presence of three parts or less of water?

A. Nowhere.

PLAINTIFF'S EXHIBIT 10

Notice

Messrs. Knappen, Uhl & Bryant, Solicitors for Plaintiff,
Grand Rapids, Michigan.

GENTLEMEN: For purposes of the above entitled case, we wish to make a comparative test of the strength of animal glue and of the vegetable adhesive used by defendants and claimed to be an infringement of the Perkins patent. In order that there may be no question as to the accuracy of the test we wish to suggest that it be made inter partes, and joints prepared with animal glue by de- [fol. 209] fendants and with defendants' vegetable glue by plaintiff, the joints being made on blocks of the same character prepared jointly by plaintiff's and defendants' representatives, and the sets of blocks so prepared being tested in some well recognized testing laboratory. We would further suggest that the tests be made in accordance with the instructions in the periodical "Glue" as they were made by plaintiff in the suit against the Solva Company.

If this suggestion meets the approval of counsel for plaintiff we would be glad to arrange with them for a date

convenient to both parties which, we suggest, should be between the 5th and 30th of October, and at a place to be selected by agreement. If plaintiff is unwilling to make such joint tests it is requested that we be promptly notified so that we may proceed with tests for this purpose ex parte.

Respectfully, Rector, Hibben, Davis & Macauley, Solicitors for Defendants.

Service of copy accepted this 22nd day of September, 1919.

Knappen, Uhl & Bryant, Solicitors for Plaintiff.

PLAINTIFF'S EXHIBIT 11

Reply to Notice

Messrs. Travis, Merrick, Werner & Johnson, Solicitors for Defendants, Grand Rapids, Mich.

GENTLEMEN: Replying to your notice of September 22, 1919, plaintiff's counsel begs to state that he is not averse to entering into any proper inter-partes test of the comparative strength of animal veneer glue and defendants' glue al- [fol. 210] leged to be an infringement in the Bill of Complaint. The motive, however, suggests the use of joints prepared with animal glue by defendant and with defendants' glue by plaintiff. Counsel for plaintiff is not sure just what counsel for defendants mean by this, but it would seem to mean that the animal glue joints are to be prepared ex parte by defendants and the joints made with the defendants' glue made ex parte by plaintiff. It would seem that if these tests are to be inter-partes, all work in connection with them should be inter-partes and not done partly ex parte, as above indicated. Furthermore, the notice suggests that the sets of blocks so prepared should be tested in some well-recognized testing laboratory. This method is not believed to be likely to lead to accurate results. Such outside testing laboratory would probably have no person sufficiently skilled and expert in vegetable glue testing.

It seems to plaintiff's counsel that the best way to carry out these tests is for plaintiff's and defendants' counsel and plaintiff's and defendants' experts to confer together and agree upon the details of such tests and then have defendants' expert and plaintiff's expert jointly carry out these tests in all particulars with the idea that the results finally arrived at may be accepted by both experts. Plaintiff's counsel regrets to say, however, that plaintiff's expert is now busily engaged in preparing for the trial of this case and his plans are so arranged that he will not be able to give any considerable time to any such tests unless they were carried out in New York City or vicinity where plaintiff's expert may attend to his regular work at the same time such tests are being made. Furthermore it is believed that the facilities for carrying out such tests are better here in New York City than elsewhere. Plaintiff's counsel and expert will be glad to meet defendants' counsel and expert most any time within the next three weeks for the purpose of arranging for such tests along the lines above indicated provided such meeting is in New York City and we are given reasonable notice thereof.

Respectfully, Graham Crosby, of Counsel for Plaintiff.

Dated September 26, 1919.

[fol. 211] PLAINTIFF'S EXHIBIT 12

Notice

Messrs. Knappen, Uhl & Bryant, Grant Rapids, Michigan.

GENTLEMEN: Please take notice that on Saturday, October 18th, at ten o'clock A. M. at the laboratory of the Armour Institute in Chicago, Illinois, we shall proceed to make tests of the relative strength of animal and vegetable glue by gluing up a set of joints with the former and a set of joints with vegetable glue as prepared and used by defendants herein, and after permitting the joints to cure for a period of three days on Tuesday, October 21st, at the same hour break the joints by pulling them apart by

means of a suitable machine for registering the strength to which the joints have been subjected. You are invited to attend and witness these experiments.

Yours very truly, R. H. D. & M., Counsel for Defendants.

PLAINTIFF'S EXHIBIT 20

Disclaimer

United States Patent Office

To the Honorable Commissioner of Patents:

Your petitioner, Perkins Glue Company, a corporation organized and existing under the laws of the State of Pennsylvania and having its principal place of business at Lansdale in the County of Montgomery and State of Pennsylvania, hereby represents as follows:

[fol. 212] 1. That on July 2, 1912 Reissued Letters Patent of the United States for Glue and Method of Making the Same No. 13436 were granted to your Petitioner, Perkins Glue Company, the original of said Reissued Letters Patent being No. 1,020,655 granted March 19, 1912 on an application filed by Frank G. Perkins, as inventor.

2. That your Petitioner is now the sole and exclusive owner of said Reissued Letters Patent No. 13,436.

3. That by the record and decisions in the United States District Court for the Northern District of Illinois, Eastern Division, and in the United States Circuit Court of Appeals for the Seventh Circuit, in the case in which your Petitioner was Plaintiff and Appellee and Solva Waterproof Glue Company and others were defendants and appellants, your Petitioner is advised that the said Reissued Letters Patent No. 13436, in so far as concerns claims 1, 3, 4, 6, 7, 8, 9, 10, 11, 12, 13, 14, 16, 24, 25, 26, 27 and 38 thereof, covers and includes more than the said inventor had a right to claim as new.

4. That the matter which the said inventor and your Petitioner are, in accordance with the said decisions, not entitled to hold or claim by virtue of said claims 1, 3, 4, 6, 7, 8, 9, 10, 11, 12, 13, 14, 16, 24, 25, 26, 27 and 38 of said

Reissued Letters Patent No. 13436, was included therein by mistake, and without any fraudulent or deceptive intent, and without any willful default or intent to defraud or mislead the public.

5. That the subject matter not herein and hereby disclaimed is definitely distinguishable from the part or parts disclaimed herein, and is truly and justly the invention of the said Frank G. Perkins, and is a material and substantial part of the thing patented.

Your Petitioner, therefore, for the purpose of complying with the requirements of the law in such case made and provided, and of disclaiming those parts of the thing patented which your Petitioner does not choose to claim or hold by virtue of said Reissued Letters Patent No. 13,436, hereby enters its disclaimer of claims 1, 3, 4, 6, 7, 8, 16, 24, 25, 26 and 27 thereof (to wit; the claims for the glue base per se and for the process of making the glue base per se) and further your Petitioner hereby disclaims from claims 9, 10, 11, 12, 13, 14, and 38 of said Reissued Letter- Patent No. 13436 any process of making glue, excepting where the starch or starchy product or carbohydrate subjected to the process, is degenerated to the extent described in the said Reissued Letters Patent No. 13436, whereby the process re- [fol. 213] sults in the good as animal glue described in said Reissued Letter- Patent No. 13436.

Signed at Lansdale in the County of Montgomery and State of Pennsylvania, this 30th day of January, 1919.

Perkins Glue Company, by Early L. Gilbert, Assistant Secretary and Treasurer.

Witnesses:

(Company's Seal) I. E. Moore, J. G. B. Perkins.

STATE OF PENNSYLVANIA,
County of Montgomery, ss:

On this 30th day of January, 1919, before me personally appeared Earley L. Gilbert, to me known, who being by me duly sworn, did depose and say that he resides in Lansdale, County of Montgomery, and State of Pennsylvania; that he is the Assistant Secretary and Treasurer of the Perkins Glue Company, the corporation described in and

which executed the foregoing instrument; that he knows the corporate seal of said corporation; that the seal affixed is such corporate seal; that it was so affixed by order of the Board of Directors of said corporation, and that he signed his name thereto by like order.

(Notary's Seal.) Edwin P. Gotwals, Notary Public.

(Here follows Plaintiff's Exhibit 22, marked side folio page 214)

[fol. 215] PLAINTIFF'S EXHIBIT

Armour Glue List

Armour Glue Works

Purposes for the Use of Different Grades of Glue

AB BB	All kinds of hardwood work, fine bookbinding, emery wheels, picture frame moulding, pattern makers, printers' rollers, leather belting. White lots are used by painters and decorators.
X3 X4	Furniture joint work, veneering, sandbelts.
No. 1 White No. 2. White	Calcimining only.
No. 4 Special No. 1 No. IX CXX	Soft wood work, veneering, bookbinding, calcimining and paper sizing.
CF CX	Paper, wood and cigar boxes, bookbinding, veneering, wall sizing, calcimining, shoe manufacturers, bag patching, oil refiners, trunk manufacturers, carpet sizing and purposes where glue of little strength is required.
No. 1 White No. 2 White	For jobbing trade, including paint and oil, druggists, hardware stores.

PLAINTIFF'S EXHIBIT 22.

Diagram of Starch structure.

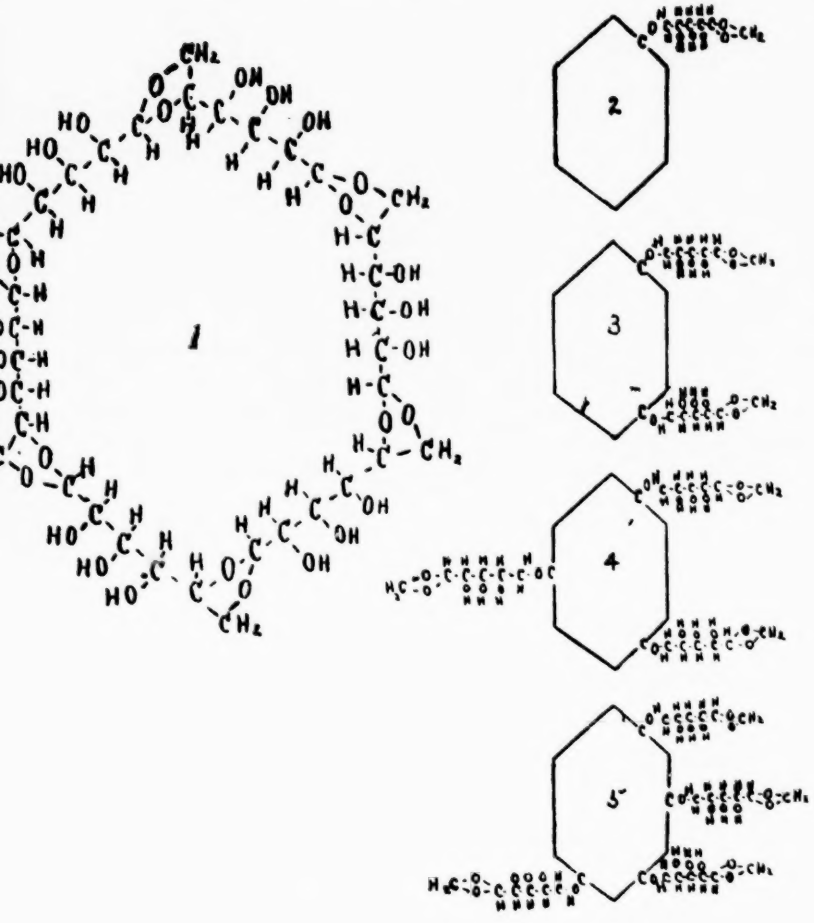

No. 4 Special
No. 1 XX Sheet
No. 1 XX Ribbon
No. 1 Sheet
CX
JK Ground

We can supply any of the above grades in ground form. The chief advantage of ground glue is the rapidity with which it may be prepared for use, requiring very little time for soaking in water before dissolving.

[fol. 216] Classes of Trade That Use Glue

Automobile Body Mfrs.
Automobile Tire Fillers
Argricultural Implements
Bar Fixtures
Barber Chairs
Bicycles
Billiard Tables
Bookbinders
Boxes
  Paper
  Wooden
  Cigar
Boots & Shoes
Brooms
Brushes
Calciminers
Caskets
Carriages
Cars
Cabinet Makers
Carpets
Cement Mfrs.
  (Patching Bags)
Chairs
Cooperage
Collar & Cuff (paper)
Corset
Coffins
Curtain Fixtures
Leather Belting
Matches
Models
Mouldings (picture)
Musical instruments
Oil Cloths
Oil Refiners
Organs
Padding Composition
Paper
  Writing Paper
  Wall Paper
  Glazed Paper
Paints & Oils
Patterns
Pencils
Pianos
Picture Frames
Plaster Casts & Moulds
Plasterers
Printers' Rollers
Pulleys, Wood Split
Refrigerators
Sash, Doors & Blinds
Sewing Machines
Silks
Staff Decorating
Toys
Trunks

Cutlery	Turpentine (Naval Stores)
Desks	Wagons
Distillers (liquor)	Whips
Druggists	Window Shades
Dyers & Cleaners	Woolens
Furniture	
Hardware Stores	GELATINE
Interior Decorating	Bakers' Supplies
Iron, Steel & Brass	Confectioners
Kodaks & Cameras	Ice Cream Mfrs.
Hat Mfgs. (Sizing)	Wholesale Grocers

[fol. 217] Feb. 5th, 1919

Glue

Full Barrel Prices

AB	
BB	
X3	
X4	
X4 Double Minus	
X4 Triple Minus	
No. 1 White	
No. 2 White	
No. 1 XX Sheet	
No. 1 XX Ribbon	
No. 1 Sheet	
No. 4 Special	
No. 1	
No. 1 X	
CXX	
CF	
CX	
JK Ground	
PB Ground	

50 lbs. 4 cents extra
100 lbs. 2 cents extra

To get C. A. Selling Prices add.

Terms: 30 days net, 2% cash discount in 10 days

[fol. 218] DEFENDANTS' EXHIBIT C.

(Copy of Defendants' Exhibit "C.")

L26, 281

United States Department of Agriculture, Forest Service

Forest Products Laboratory, Madison, Wisconsin

(In Co-operation with the University of Wisconsin)

Animal Glues—Their Manufacture, Preparation and Application

Not for Publication

May 5, 1919

Animal Glues—Their Manufacture, Preparation and Application

It is the purpose of the following statement to give a general idea of the source and methods of manufacture of animal glues along with some notes on their application.

Manufacture of Animal Glue

The process of making animal glue is briefly as follows: The stock is washed and treated to remove dirt and grease, and then boiled to convert the glue-forming substances into a glue solution. This solution is concentrated by evaporation until it will form a jelly on cooling. The jelly is then cut into various forms and dried.

There are many details and variations in the steps above outlined which depend upon the kind of stock used and the plant in which the glue is made, all of which have more or less effect upon the character of the resultant glue. [fol. 219] Bones are sometimes boiled without first removing either dirt or grease. This practice naturally fails to produce a high-quality glue. Whether or not bones are treated with acid to remove the calcium salts before cooking, will also influence the glue quality. In cooking, the temperature and time must be carefully watched, as overcooking may materially reduce the strength of the glue.

The stock is usually boiled with fresh water several times. The first boiling or first run gives the best glue, the strength of the glue obtained from the succeeding boilings being less each time.

As the solution of glue from the boiling kettles is too weak to form a jelly which can be handled, it must be concentrated. This is done by boiling off the water in vacuum dryers until the percentage of glue in the solution is high enough to make a firm jelly on cooling. If the temperature rises too high during the concentrating process the quality of the glue may be lowered.

When sufficiently concentrated the glue solution is cooled by refrigeration, either after being run into pans or as it runs upon a traveling belt. As it cools it forms a jelly firm enough to handle. The jelly in the pans is removed, sliced with wires or a knife, and placed upon screens to dry. If a belt is used the jelly is formed in a continuous sheet, which is cut into sections and placed on screens as it travels along. The screens are then placed in a drying chamber and left until the glue is dry. Glue may be easily injured during the drying process if the temperature conditions are not properly controlled.

The form of the glue when dry depends upon the shape in which it was placed upon the screens. If carefully sliced to the proper thickness regularly shaped cake will be formed. The sheet glue from the belt breaks into thin irregular shaped pieces as it comes from the drying nets. This is commonly run through a machine to break it into smaller pieces, in which shape it is shipped as flake glue. Other forms of glue are also made, and any of the forms may be subsequently ground and sold as ground glue.

Sometimes mineral matter such as barium sulphate, white lead, chalk, zinc oxide or whiting is added to the glue after it has been concentrated, but before it is cooled. This gives it a light color and makes it opaque, which is a feature desired by some customers.

Nominal grades can not be relied upon when purchasing namial glue for high grade work. It is necessary for the purchaser who buys on bids to specify his requirements [fol. 220] and then provide means to insure that the glue furnished by the manufacturer is up to these requirements. The variety in character, color, form, strength, etc., of

animal glue is almost without limit. A system of classification, based chiefly on the jelly strength, was devised a long time ago by Peter Cooper. By means of this system it is possible to group the great variety of glues into a relatively few classes or grades. The grades established by Cooper, were designated, beginning with the strongest, A Extra, 1 extra, 1, IX, 1¼, 1⅜, 1½, 1⅝, 1¾, 1⅞, 2. There are new glues stronger than A Extra, and glues weaker than 2, for which there is no standard Peter Cooper grade. This system of grading, however, appears to be but little used today by manufacturers, except occasionally for comparative purposes. Each manufacturer has his own system of grading which he keeps more or less secret, and to the general buying public the grades mean little or nothing. It is sometimes claimed also that the Peter Cooper grades of to-day are not the same as those established long ago.

Mixing and Application of Animal Glue

In using hide glue there are a number of precautions that must be observed if satisfactory results are to be obtained. By improper use a very high-grade glue may be made to give poor joints. It is important first to find out the right proportion of glue and water to use to get the best results with the wood being used and the conditions under which the work is being done. This is largely a matter of experience, but it can also be determined by strength tests. When the right proportions have been decided upon they should be strictly adhered to thereafter, and the glue and water should be weighed out when making up a new batch of glue rather than measured or guessed at. Clean cold water should be used, and the mixture thoroughly stirred to prevent lumps. It should then stand in a cool place until the glue is thoroughly water-soaked and softened. This may take only an hour or two, or it may take all night, depending upon the size of the glue particles. It should then be melted over a water bath and the temperature not allowed to go higher than about 150° F. High temperatures and long continued heating reduce the strength of the glue solution and are to be avoided. The glue pot should be kept covered as much as possible in order to prevent the formation of a skin or scum over the surface of the glue.

[fol. 221] The room in which the glue is used should be as warm as possible without causing too much discomfort to the workmen, and it should be free from draughts. In a cold draughty room the glue cools too quickly and may set before the joint has been put into the clamps. The result is a weak joint. It is also considered good practice to warm the wood before applying the glue, but it should not be heated long enough to warp it. Wood should never be glued when it is colder than room temperature, and of course, only thoroughly seasoned wood should be used. Since high-strength animal glues set so quickly on cooling, they should be applied and the joints clamped as quickly as is consistent with good workmanship.

In clamping, the pressure should be evenly distributed over the joint so that the faces will be in contact at all points. The amount of pressure to give the best results is a question which has never been definitely settled. Apparently no tests have yet been made to show the best pressure to use on edge or flat grain joints. In gluing veneers it is necessary to use high pressures in order to flatten out the irregularities of the laminations. Pressures as high as 150 pounds per square inch are sometimes used, but it is not established that such high pressures are necessary or desirable. Too much pressure must not be used in gluing surfaced wood as the glue may be pressed out too completely from the joint and a so-called starved joint be the result.

Strict cleanliness of glue pots and apparatus and of the floors and tables of the glue room should be observed. Old glue soon becomes foul and affords a breeding place for the bacteria which decompose glue. The fresh glue is, therefore, in constant danger of becoming contaminated. Glue pots and brushes should be washed after every day's work. The brushes will remain sweet if kept when not in use in a week solution of carbolic acid. Glue enough for a day's run only should be mixed at one time, so that mixed glue will not have to be held over from one day to another. If these sanitary precautions are not observed poor joints may result.

Strength of Animal Glue

The highest grades of animal glue are the strongest glues in wood working. Their strength is greater than the woods

they are used upon, and when they are properly applied they are exceedingly reliable, so long as they are not exposed to moisture. The certified glue used in propeller manufacture was plenty strong enough for the highest type of [fol. 222] wood working, yet there are still higher grades of glue obtainable. The certified glues were required to have an average shearing strength of 2,400 pounds per square inch with a minimum not less than 2,200 pounds per square inch. Most of them, however, actually showed average shearing strength between 2,500 and 3,000 pounds per square inch.

The shearing strength of the lower grades of animal glue such as 1¼ and less is somewhat lower, but by careful application fairly high values can be obtained from them.

The water resistence of animal glue is low, but there is an appreciable difference between the resistance of the different grades of dampness. The high grades, which have high jelly strength, will stand dampness for longer periods than the low grades which have low jelly strength.

List of References

In a brief article of this nature it is not possible to cover thoroughly all the points touched upon, or to even mention many things which the glue user or inspector should know. If the reader is interested in getting a better knowledge of the subject than can be obtained from this article it is advisable that he read some or all of the following publications:

Books

Agglutinants of all Kinds and for all Purposes—Standage 267 pages, published by D. Van Nostrand, New York, 1907. $3.50.

Glue, Gelatine, etc.—Dawidowsky, 282 pages, published by Henry Carey Baird & Company, 810 Walnut Street, Philadelphia, Pa., 1905. $3.00.

Glues and Gelatines—R. L. Fernbach, 200 pages, published by D. Van Nostrand, New York, 1907. Discusses the manufacture, classification, testing and analysis of glues and gelatines and gives information on substitutes, $3.00.

Glues and Glue Testing—Samuel Rideal, 140 pages, published by Scott, Greenwood and Son, London, 1901. Discusses the manufacture, testing, and use of glues, especially the chemical side. $4.00

The Glue Book—J. A. Taggart, Toledo, Ohio, 85 pages, published by the Republican Publishing Company, Hamilton, Ohio. Discusses "how to select, prepare and use glue." $1.00

[fol. 223] Glue Handling—Friman Kahrs, 128 pages, 1906, Periodical publishing Company, Grand Rapids, Mich. $1.00.

Journal Articles

Specifications and Tests of Glue—Linder and Frost, Proceedings American Society for Testing Materials, 1914, Part 2, pages 509 to 519. Gives the results of tests of cabinet glue.

A Study of Various Tests upon Glue—A. H. Gill, Journal of Industrial and Engineering Chemistry. Vol. 7 (1915), pages 102 to 106. Gives the result of tests made at Massachusetts Institute of Technology.

Glue for use on Airplanes—P. A. Houseman, Journal of Industrial and Engineering Chemistry, Vol. 9 (1917), pages 359 to 360. Republished in Aviation, July 1, 1917, Page 462.

The Grading and Use of Glues and Gelatine—Jerome Alexander, Journal of Society of Chemical Industry, Feb. 28, 1906.

DEFENDANT'S EXHIBIT D

(Copy of Defendant's Exhibit "D")

L26, 281

United States Department of Agriculture, Forest Service

Forest Products Laboratory, Madison, Wisconsin

(In Co-operation with the University of Wisconsin)

Not for Publication

Comparison of Various Types of Glue

May 5, 1919

[fol. 224] Comparison of Various Types of Glue

For the purpose of this discussion glues will be divided into five types, namely, animal, casein, vegetabled blood and liquid. Each type has its own peculiarities, properties, and uses and these influence its suitablity for various purposes.

Animal glue has been used so long and is so familiar to wood workers that the value of other glues is measured by comparing with animal glue. The principal desirable properties of animal glue are the great strength and reliability of the higher grades, its free-flowing consistency, and the fact that it does not cause staining on fancy face veneers. So far no glue has been found by the woodworking industry to be as suitable as animal glue for hand spreading on irregular shaped joints, although a cheaper glue would be very desirable.

The price of animal glue and the fact that it is not highly water resistant are the chief factors which limit its use.

Casein glue has been used commercially for such a short time that its possibilities and limitations are not well known. It has good strength, is used cold, and can be spread with a brush, which are desirable properties. The property most featured, however, is its high water resistance, which

makes it suitable for gluing articles to be used under moist conditions. This property makes it a very desirable glue for special purposes.

Among the disadvantages of casein glues are their tendency to stain thin veneer and the relatively short working life of some kinds. They are also said to be somewhat harder on tools than animal and vegetable glues. This may be overcome possibly by using different steel in the tools or perhaps by altering formulas.

Casein glues by proper manipulation can be given special properties as desired. Their water resistance, strength, consistency, spread, and cost can be varied over wide ranges by one thoroughly familiar with the subject. This is true to a much greater extent of the "wet" than of the prepared casein glues. Already considerable reductions in cost have been made in both kinds, but particularly in the "wet" glues. It seems quite probable that casein glues will some day be serious competitors of vegetable glues on a price basis, without regard to water resistance or other properties. Already they are entering the field of animal glue in joint work. The fact that they can be made to spread readily by hand on irregular joints is in their favor in this connection, in addition to their lower price.

[fol. 225] Vegetable glues have found wide use in recent years chiefly on account on their cheapness. Other valuable features are that they are used cold, they remain in good working conditions and free from decomposition for many days. They are extremely viscous, however, and not practicable to spread by hand. Their lack of water resistance and the fact that they usually cause staining in thin fancy veneer are factors limiting their use.

Experimental work by manufacturers is constantly under way with the object of developing new and better grades of vegetable glue and some progress has been made towards producing a stainless grade. The future developments in this line depend to some extent upon decisions in patent litigation.

Blood albumin glue has shown especially high resistance to water, especially in the boiling test. This makes it particularly suitable for gluing ply-wood which is later to be softened in hot water and molded. The production of such

articles has been very limited but it offers a good field for future development.

Blood glue formulas can be altered so as to produce glues of various properties. It is possible to make some very cheap blood glues suitable for the production of medium or cheap grade articles. A very valuable form in which it can be made is the dry glue tissue. This promises to be valuable for laying fancy veneers, since by its use it is possible to eliminate much of the trouble due to moisture changes.

The factors limiting the use of blood glue are the expensive apparatus required, the relative low production per press, and the fact that it is not very practical for gluing thick stock.

Liquid glues are in a general way similar in properties to animal glue. Some brands of them are quite equal in strength to good joint glues, but other brands are very weak and unreliable. Their desirable property is that they come in prepared form, ready for immediate use. This makes them particularly suitable for patch work and small gluing jobs. The factors which limit their use are their high price, their lack of water resistance, and the difficulty the manufacturer has in distinguishing between good brands and poor brands.

The following table gives in summarized form a comparison of the various glues. From the table and the preceding discussion it will be seen that there is no glue which is superior in all respects to all the others. Each glue has its uses therefore, and it is an advantage to be familiar with them all.

Comparison of Properties and Characteristics of Various Glues

Characteristic of Property	Animal glue	Casein glue	Vegetable glue	Blood glue	Liquid glue
Source	Animal hides, bones, etc.	Casein, from milk	Starch—generally cassava	Soluble dried blood	Animal glue, or skins, bones, etc. of fish
Cost per pound (April 1919) (Veneer glue prices for carload lots)	High grade 25-42c Veneer grades 15-30c	Casein 14c to 18c. Prepared casein glues 16-20c	Prepared glue 10 to 12c. Starch 8 to 9c	Dried blood about 12c per lb.	$1 to $5 per gal.
Spread [1]					
Extremes reported	20 to 45	30 to 80	35 to 70	30 to 100	No data
Common range	25 to 35	35 to 55	35 to 50		
Mixing	Soaked in water, then melted	Mixed cold with rapid stirring	Mixed with alkali and water with or without heat. Can be made without alkali	Mixed cold	Requires no preparation

[1] Expressed in sq. ft. glue line per # dry glue for veneer work.

Comparison of Properties and Characteristics of Various Glues—(Continued)

Characteristic of Property	Animal glue	Casein glue	Vegetable glue	Blood glue	Liquid glue
Application	Applied warm with brush or mechanical spreader	Applied cold with brush or mechanical spreader	Applied cold with mechanical spreader	Applied cold by hand or by mechanical spreader	Applied cold or warm, usually by hand
Temperature of Press	Cold Hot cauls frequently used	Cold	Cold	Hot	Cold
Strength (block shear test)	High grade equal in shear strength to strongest American woods. Medium grades slightly lower	Similar to medium grade animal glue	Similar to or slightly less than medium grade animal glue	Similar to or slightly less than medium grade animal glue	Good grades similar to medium grade animal glue; some brands very weak
Water resistance	Low	High	Low	High	Low

[fol. 228]

L26, 281

Comparison of Properties and Characteristics of Various Glues—(Continued)

Characteristic of Property	Animal glue	Casein glue	Vegetable glue	Blood glue	Liquid glue
Staining	Does not stain	Stains thin veneer of some species	If mixed with caustic soda it stains thin veneer of some species	Does not stain but the glue is high colored. Dry process glue does not show through	Similar to animal glue
Uses in wood working	High grade—where a strong joint is desired. Low grade—sometimes used for veneering especially where it is desired to prevent staining.	Mainly where water resistance is desired in veneered or joint work.	Mainly in veneered work on account of cheapness but also somewhat for point.	Almost entirely for water resistant ply-wood —for aircraft purposes and for articles to be moulded after boiling in water.	Mainly for repair work and gluing small articles by hand.

UNITED STATES PATENT OFFICE.

FRANK G. PERKINS, DECEASED, LATE OF SOUTH BEND, INDIANA, BY GERTRUDE A. PERKINS, OF SOUTH BEND, INDIANA, EXECUTRIX, AND PERKINS GLUE COMPANY, A CORPORATION OF PENNSYLVANIA, ASSIGNEE.

GLUE AND METHOD OF MAKING THE SAME.

13,436. Specification of Reissued Letters Patent. **Reissued July 2, 1912.**

No Drawing. Original No. 1,020,655, dated March 19, 1912, Serial No. 460,737. Application for reissue filed May 17, 1912. Serial No. 698,052.

To all whom it may concern:

Be it known that I, FRANK G. PERKINS, a citizen of the United States, and a resident of South Bend, county of St. Joseph, and State of Indiana, have invented certain new and useful Improvements in Glue and Methods of Making the Same, of which the following is a specification.

My invention relates to improvements in glue and the method of making the same, and more particularly to the manufacture of glue from carbohydrates containing amylo-cellulose or its equivalent.

In the well known method of making a "starch paste" the solid is mixed with water enough, to make, after tumefying, a paste of such viscosity or density that it can be easily applied. This mixture is then subjected to heat to rupture or burst the cellulose walls and this cooking to a considerable degree supposedly reduces the cellulose to soluble starch, particularly in the presence of soluble starch already in solution. To increase the body or viscosity small amounts of ammonia have been added prior to or after heating. Such pastes have not the necessary relative "tack," viscocity, cohesiveness and tenacity to spread and adhere properly when applied as wood glues. Such pastes in cooling also become extremely thick and jelly-like and are practically unsatisfactory for woodwork when originally made with water, or diluted after cooking, because water warps the wood and delays drying and the pastes do not set hard enough and are not dense and elastic enough when dry. If more water is added in an attempt to make it more fluid, the paste becomes so weak and diluted that it has practically no power and would be wholly unfit for most classes of work, especially wood joints.

Various objects of my invention are to provide a glue and a method of making the same from carbohydrates, which will not have the disadvantages just pointed out, but which will be exceptionally tenacious and powerful but still amply fluid for easy application, and which can be economically and easily produced.

A further object of my invention is to produce a glue which will have the great practical advantage that it may be practically used for the same purposes as the best animal glue, and possess certain great advantages of permanency to weather and temperature variations far superior to those of animal glue. As far as I am aware, such conditions have never been met by any prior adhesive made from a carbohydrate base.

A further important object of my invention is to produce an adhesive or glue base which may be stored or sold in a dry state and which may then be prepared for use by mixing up with or without the use of heat. Such improvements are of great practical and industrial advantage and importance and have been much sought. To do this I first take a carbohydrate of the proper kind, and treat it with a reagent to decrease its water absorptive properties in the sense that to render fluid the finished glue, comparatively little water will have to be added and the final glue will not thereby become seriously diluted. The reagent I use I call a starch converting agent because it is believed it exercises, at least in part, a hydrolyzing or oxidizing or converting action similar to that of the well known starch converting agents many of which have been used to convert starch into soluble starch and dextrin. I may use any suitable starch converting agent but the action I produce is preferably much less complete since it is not my object to convert the starch wholly but only to effect its physical properties when put into solution or dissolved to form glue. The effect of this treatment is also that it decreases the viscosity of the glue produced with a given amount of water without detriment to its "tack," quick adhesive properties and cohesion. As a base I prefer to use the starch secreted by the cassava plant, which has peculiar properties and advantages for this purpose. After being treated as above, the dried material may be mixed with a small amount of water and with a solvent of amylo-cellulose, such as caustic alkali, and a glue produced the strength of which when dry is superior to the lateral strength of wood fiber. The prepared glue is very stable in its physical condition, so much so, that it may be kept for days or even weeks after it has been mixed

for application without fermentative change. By my process in its preferred form the glue is free from the complications which attend the use of an adhesive which must be cooked or warmed before use, or kept warm during use, and is more powerful than that which results from the treatment of starch in other ways. My improved glue when made in its best form and properly applied will not only tear away the wood at some point in the wood joint produced by the use of this glue, but will tear away the wood at many points whether with or against the grain.

Further objects, advantages and features will more clearly appear from the detailed description given below.

In carrying out one embodiment of my invention I take the cassava carbohydrate or flour in dry form and add at least an equal weight of water. The batch is then agitated and heated to about 130° F., which is below the bursting temperature of the starch. Then I slowly add from 2% to 3% by weight (of the raw carbohydrate) of strong sulfuric acid. This may be considerably diluted if desired before it is added. The same is kept in continual agitation. The agitation preferably produced by thorough stirring is continued for from four to six hours after the acid has been added and then the acid may be neutralized by the addition of a small amount of caustic soda or similar alkali. The acid acts upon the starch or carbohydrate to decrease its water absorptive properties. As the acid appears to remain unchanged in the batch, until neutralized, I believe it acts catalytically to change the molecular condition of the carbohydrate without rendering it substantially soluble in the water. However, great care must be exercised not to have the heat sufficient or the acid in such quantity as to put the starch or carbohydrate in solution. If the action of the acid and heat is carried too far the starch will be changed into dextrin, and will go into solution, and as such it would be lost to my process, as I utilize only the suspended material. Even this would cease to have the desired properties if the action were carried too far.

That a large part, if not all, of the starch does not, in my improved process, go into solution, is shown by its settling upon stopping the agitation and by the weight and analysis of the product yielded. The batch therefore has not been converted into dextrin. Sulfuric and other acids as well as other starch converting agents are stated to have a catalytic action affecting the molecular state of amylose or its state of hydration. This I believe to be promoted and equalized by prolonged agitation both together with the action of heat, removing constituents or destroying states of aggregation or polymerization, which are detrimental to the use of the carbohydrate as a glue base. The amount of alkali used is only enough to neutralise the acid. After this has been added, the batch is then cooled, drained and dried and kept in dry form until ready for use.

I find that the carbohydrate secreted by the cassava plant and known as cassava flour has many advantages over other starches and starchy products and prefer its use, but such other starches or starchy products may be used with more or less success. Other starchy products from the cassava plant are found to be more or less adaptable and even other starchy products may be used with some little success but they do not produce glues so tenacious and are otherwise more or less undesirable. Some are affected by impurities.

The above forms the first part of my improved process and the various steps therein may all be carried out at the factory.

In commercial use I preferably ship the dry material, obtained as above, to the consumer who carries out the second part of the process at the place where the glue is to be used, but if desired the first and second parts of my improved process may be carried out together.

In carrying out the remaining steps in the preparation of my improved glue, the dried base, obtained as above, is mixed with about three parts or less by weight (of dried base) of water according to the strength of the joint and economy desired. The dried base does not materially go into solution in the water unless heat is applied, but a liquid suspension is thereby formed which is agitated and treated with a solvent of cellulose, as, for example, an aqueous solution of caustic soda or potash alkaline to phenolphthalein, using if cold from six to ten per cent. of the weight of the dry base, of caustic soda or its equivalent of caustic potash. The alkali, I believe, acts chemically to unite with one or more starch molecules and with the water to form a colloidal compound. The alkali is best added in the form of a solution of from 33% to 50% strength. Sodium and potassium hydrates are the most available and among the most powerful of the known solvents of the starch cellulose and are well adapted for most purposes.

To take a specific example, a given quantity, say 100 lbs. of the dried amylaceous base was mixed with from 100 to 300 lbs. of water (preferably 225 lbs. or less). After the mixture was thoroughly agitated, 10 lbs. of caustic soda was added in a concentrated solution of approximately one part alkali in one to two parts water. This was added with extreme slowness, requiring 15 to 20 minutes for the 30 lbs. solution re-

[illegible]. During this time constant stirring was maintained in order to equalize and distribute the action of the caustic soda as fully as possible. When normal temperatures were used the result has not been obtained with less than 6 parts of NaOH per 100 parts of amylaceous base. The result consists in what is called the passing over or "coming across" of the mixture and may be described as follows: During the earlier stages of the addition of the caustic in the above example, little difference in the appearance of the mass was apparent. Soon, however, it became creamy and then more pasty and difficult to stir. When about half the caustic soda har been added, there was faintly observable a minute mottled effect on the surface of the mass being stirred, and it gradually assumed a translucent porcelain-like appearance. If at this time a little of the mixture was squeezed between glass plates portions of the mixture were observed to be transparent and almost invisible. Other portions presented much the appearance of the original mixture of water and suspended particles of starch. As the addition of caustic soda proceeded accumulations of clearer matter occurred on the sides of the vessel and on parts of the stirrers and finally when the proper amount of caustic had been added, the entire mass "passed over" or "came across", being converted from a mixture of suspended starch and water containing caustic to a homogeneous colloidal compound of starch, caustic and water. A little excess of caustic was preferably added to prevent decomposition of the compounds by the carbonic acid or moisture of the air. As much as fourteen per cent. NaOH, or the equivalent of other caustic may be used, leaving some free caustic in the prepared glue. The word "compound" is here used in the more modern chemical sense of matter connected within the limits of some quantitative relation to produce a definitely recognizable product having certain definite physical characteristics. It is found that temperature affects the amount of caustic required to produce this result and it is believed that as temperature affects the polymerizing or uniting power of the starch molecules, one with another, so it affects the ability of a smaller quantity of caustic to satisfy or bring across a given quantity of starch. It is found that at successively increasing temperatures one is enabled to bring across the mixture with successively decreasing proportions of caustic.

As previously stated, when ordinary starch is heated with water, it absorbs enormous quantities of water, and if only two or three parts of water are used becomes of a stiff jelly-like form which must be very much diluted before it will be practically workable. I find, however, that using my improved glue base and method of mixing the same, this water absorbing power can be greatly reduced and can be regulated, although the mixing is done with the same proportions of alkali and carbohydrate or else the same temperature, which have hitherto produced unworkable jellies or weakly adhesive pastes or mucilages. And by the use of cassava starch in particular, results can be secured entirely different from those hitherto produced, as stated by others, preferably with corn. Thus, by proper adjustment of conditions of mixing I am able to produce this glue even with certain grades of untreated cassava carbohydrate and with other starches and conversion products (starchy carbohydrates). The preliminary treatment, however, substantially reduces the absorption of water by the starch and prevents it from becoming jelly-like and tough when afterward treated either with the water as above indicated or with the alkali, or both.

In the second part of my improved process, less than about three parts of water by weight to one part of the dry material are used and after adding the solvent it is found that even with such a small amount of water, the batch will assume a semi-fluid consistency much superior to that ordinarily obtained by the use of water alone and will not become jelly-like and tough as in former processes. The alkali added acts, I believe, to dissolve more or less of the cellulose and carbohydrate, uniting with the same and with the water and forming a glue of very tenacious properties. The dry carbohydrate is mixed with the water with a carefully regulated heat, if any. The action of heat replaces the action of a portion of the caustic in transforming the glue base, as explained above. By the preliminary treatment in reducing the water absorbing power of the carbohydrate, a very concentrated mixture with water may be obtained.

Experiments indicate that after the carbohydrate base has been treated in accordance with the first step of my process, the proportion of amylo-cellulose in the carbohydrate granule has been increased. I believe this increase in the percentage or proportion of the amylo-cellulose in the carbohydrate allows of the same to be changed into a good glue with very much less water than would otherwise be required. One way which has been found quite satisfactory for determining when the action of the acid or its equivalent, and the agitation, have been carried far enough in the first step, is as follows:

When the carbohydrate glue base which has been dried has been boiled for ten minutes with dry live steam at 100 lbs. pressure with 9 parts of water and tested for

viscosity while hot, it showed a viscosity between that of cold water and three times that of cold water.

In specific examples tried, the carbohydrate base, subjected to the above test, has shown viscosities between that of cold water and three times that of cold water, but a product showing about two times the viscosity of water is preferred. In measuring this viscosity 350 grams of base were mixed with 3150 c. c. of cold water and 450 grams of the steam condensed therein and tested at 180° F. A Perkins viscosimeter was used, which may be constructed of brass tubing 1.295 inches outside diameter, 0.012 inch thick, and 3 inches long, and having a flat brass bottom 0.050 inch thick soldered into the end having a round center hol 0.070 inch in diameter, the total weight being 39.63 grams, and all edges being made smooth removing practically no weight, the hole being polished until the cup placed quickly at its floating level in water at 60° F. floats upright and fills up to the point of sudden sinking by top overflow in 16 seconds. If the material directly from the treatment tank of the first step is to be tested, a small quantity is taken, neutralized and diluted with cold water to 4½ Be'. 3150 c. c. of this thoroughly mixed batch are then taken in a vessel and the steam similarly admitted to the bottom of the batch, but this is found to indicate about 6½ seconds lower.

The carbohydrate glue base in the preferred form retains substantially unchanged the size and general form of particle as viewed under the microscope when treated with cold water, and produces opalescent cloudy solutions with water at 200° F.

When treated in accordance with my process, I find that the carbohydrate glue base may be formed into glue by using only from one to three parts of water, the more water used the greater the delay in drying. Preferably less than 4½ parts of water should be used in making the glue from the carbohydrate base.

I believe that the cause of the tenacious properties when carbohydrates are treated with water and a strong solution of an alkali may be traced to the proper proportioning of viscosity, cohesion and adhesion, together with the peculiar chemical action which caustic loosely combined or free in the glue as applied, exerts on the cellulose which it in turn combines with, in making the joint to form alkali metal carbonate, bicarbonate and acetate. I believe this proper proportioning is due to the partial change of the integument and the proper proportioning of the amylo-cellulose and the granulose (or the proper mean polymerization) when united with the caustic and water. Consequently, I believe that to obtain the best results it is necessary to abstain from reducing the cellulose to true soluble starch, and that sufficient cellulose must be left to make the glue amply tenacious. Therefore, the action of the acid and alkali should not be carried so far nor the temperature be so high as to destroy all the cellulose and impair its strength by changing it into soluble starch and the starch into sugar or dextrin. Also, in actual practice I have found that a good glue is produced by treating the base with the chemicals to reduce the water absorbing power to a point where the base if mixed with from 2 to 3 parts of water and subjected to heat of 150° F. would result in a syrupy condition instead of a thick jelly-like mass. I find that by such suitable treatment under my process it is possible to produce from the base long filaments having a strength similar to threads of animal glue. Practically all the water must be later removed that goes into the glue solution and is applied to the joints, hence an increase of water in the glue solution involves changes in drying methods, or in drying time, or in risks of injury to the material due to warping by the extra water, all of very serious consequence. The diluted or adulterated pastes hitherto made from the natural carbohydrates in the manner explained before are unfit for many classes of work and especially wood joint work, since they contain so much water or adulterants that it takes the joints very long to dry or when they do become dry there is so little binding material left that only a very weak bond is obtained. Thus it is of the greatest importance and value to produce a concentrated glue solution ready for application, which parallels the animal glue solutions now employed industrially, in respect to water contents and physical properties in application, and is equal or superior as to strength and permanency.

Certain advantages of my improved process may be obtained to some extent even although other materials be mixed with the amylaceous material to form the glue base.

In the preferred form described my improved glue is transparent and free from odor, and is very stable after mixing for use, it is instantly adhesive to clean surfaces, its cohesion is very great but not sufficient to overcome its adhesion and its viscosity is lasting and low enough to permit ready application, but so proportioned to its cohesion that it is capable of being applied by machinery like hide glue, but still very long tough fibers are produced if freshly joined surfaces are separated. I have found that, owing to the breakage of these filaments quick separation of such surfaces produces a crackle like electric sparks.

My glue will produce joints which are practically unaffected by natural humidity and which are unaffected by prolonged dry

heat. In the preferred form it forms a joint with wood or other cellulosic material, which joint is distinguished from ordinary mucilages, sizes and pastes by the fact that it consists of the following layers in the order named, unaltered cellulosic material, cellulosic material altered by caustic, tough amylaceous material altered by caustic, cellulosic material altered by caustic and unaltered cellulose. This joint can probably be distinguished wherever found, by the shading of the above layers into one another when stained with iodin and examined under the microscope and by other tests. Glued up panels have been placed behind a radiator for 18 months without cracking or separating of the glue joint. These features make my glue especially advantageous for purposes in which other vegetable glues are practically useless.

Although I have described my improvements in great detail and with much particularity and have mentioned particular compounds which I prefer to use, I desire it to be understood that I do not limit myself to such details and compounds, except as clearly specified in the appended claims, as many modifications and substitutes may be found, but,

Having fully and clearly described my invention with respect to one particular embodiment thereof, what I claim and desire to secure by Letters Patent, is:

1. The process of making a glue base which consists in agitating cassava carbohydrate with water and a starch converting agent whereby the polymerization of the carbohydrate is altered to a point such that when dissolved it will form a viscous semi-fluid unjellified product adapted to be applied by machinery.

2. The process of making wood glue which consists in taking suitable carbohydrate material and properly proportioning the viscosity, cohesiveness and adhesiveness of the carbohydrate material resulting when it is dissolved to form glue applicable by machinery and then dissolving the carbohydrate material with a solvent of cellulose to put it into solution to form glue.

3. The process of making a glue base which consists in agitating a starchy carbohydrate with water and a starch converting agent to decrease the water absorptive properties of the carbohydrate to properly proportion the viscosity, adhesiveness and cohesiveness resulting when the base is dissolved to form glue properly for the application of the glue by machinery.

4. The process of making a glue base which consists in agitating a starchy carbohydrate with water and suitable chemicals below the bursting temperature of the starch to proportion the viscosity, adhesiveness and cohesiveness resulting when the base is dissolved to form glue applicable by machinery.

5. In the making of adhesives, treating cassava flour with substantially an equal weight of water, heating the same to about 130° F. and adding about 2% or 3% by weight of strong acid slowly and with agitation, without rendering the flour materially soluble in water, then neutralizing the acid with an alkali after from 4 to 6 hours agitation.

6. In the making of a glue base, treating amylaceous material with a reagent to decrease its water absorptive properties, leaving a material portion of amylaceous material in the product insoluble in water.

7. In the making of adhesives, treating a suitable carbohydrate with water and a digesting agent without rendering the carbohydrate materially soluble in water, to decrease the water absorptive properties of the carbohydrate.

8. A glue base characterized by the facts that it is prepared from starchy material, retains substantially unchanged the size and general form of particle when treated with cold water, and produces opalescent cloudy solutions with water at 200° F.

9. The process of making glue which consists in treating starch below the bursting temperature of the starch, with a digesting agent such as caustic and water until the material assumes a viscous semi-fluid consistency adapted to be applied by machinery.

10. The process of making glue which consists in dissolving cassava carbohydrate in caustic alkali until a glue is formed as distinguished from mucilages, sizes and pastes.

11. The process of making a glue, which consists in treating a starchy carbohydrate with caustic alkali, and water, to dissolve the carbohydrate, the total amount of water used being about 3 parts or less by weight of the carbohydrate, the amount of caustic alkali used, calculated as NaOH being about 10% or less by weight of the carbohydrate so that a wood glue is formed, as distinguished from mucilages, sizes and paste.

12. The process of making a glue, which consists in mixing starch with water and caustic alkali to dissolve the carbohydrate, the amount of water used being about 3 parts or less by weight of dry carbohydrate so that a wood glue is formed, as distinguished from mucilages, sizes and paste.

13. The process of making a wood glue which consists in treating a suitable starchy product a material portion of which is substantially insoluble in water with a solvent of cellulose and about 3 parts or less by weight of water, to produce a glue having adhesive powers substantially as great as those of good animal glue.

14. In the making of glue, treating a suitable starchy product with about three parts or less by weight of water and adding a solution of caustic soda or other equivalent alkali using about 10% or less by weight of the caustic soda or its equivalent of other alkali to dissolve the product.

15. In the process of making wood glue, the combination of the following steps, agitating a starchy carbohydrate with a digesting agent to decrease its water absorptive properties without converting the batch into dextrin, and then substantially dissolving the product thus produced with about three parts or less of water until the resulting product has a consistency such that it is applicable to glue up veneers.

16. In the process of making wood glue, agitating a starchy carbohydrate with a digesting agent until a sample of the material taken from the batch and dissolved will show a viscosity, adhesiveness and cohesiveness substantially equal to animal glue.

17. The process of making wood glue which consists in agitating starch with a digesting agent to decrease its water absorptive properties without rendering the carbohydrate materially soluble in cold water and then combining the product thus produced with a solvent of cellulose to produce a glue for application, thus proportioning the viscosity, adhesiveness and cohesiveness of the final glue.

18. The process of making wood glue which consists in agitating a starchy carbohydrate with a digesting agent to decrease its water absorptive properties and then combining the product thus produced with alkali and water to produce a glue for application having free caustic alkali therein.

19. In the process of making wood glue, the combination of the following steps, agitating a cassava carbohydrate with a digesting agent to decrease its water absorptive properties without rendering the carbohydrate materially soluble in cold water and then putting the product thus produced into a solution containing about three parts or less by weight of water to produce a glue for application.

20. The process of making glue, which consists in agitating a starchy carbohydrate with water and a digesting agent to reduce the water absorptive properties of the carbohydrate without rendering it materially soluble in water, then mixing the carbohydrate with water and caustic alkali, the amount of water used being about three parts or less by weight of dry carbohydrate, the amount of caustic used being about 10% or less by weight of dry carbohydrate, to dissolve the carbohydrate to form the glue as distinguished from mucilages, sizes and paste.

21. The improved glue process which consists in treating cassava carbohydrate with substantially an equal weight of water, heating the same to about 150° F., adding from 2% to 3% by weight of an acid, slowly, and during agitation, neutralizing the batch with an alkali after from 4 to 6 hours agitation, then cooling and drying the batch, then adding from 1 to 3 parts by weight of water, and then while being agitated treating the same with a solution of a caustic alkali using about 10% or less by weight of the dry alkali and applying the resulting product to surfaces with which the caustic is adapted to combine and forming a joint between said surfaces.

22. In the making of adhesives, treating a suitable starchy carbohydrate insoluble in water with water with a reagent to decrease its water absorptive properties but without rendering the carbohydrate materially soluble in water, then allowing the batch to dry, then treating the same with water and a solvent of cellulose such as caustic alkali to form glue.

23. In the making of adhesives, treating a suitable starchy carbohydrate with an agent having an acid reaction without rendering the carbohydrate materially soluble in water, to decrease the water absorptive properties of the carbohydrate and then treating the carbohydrate with a solvent of cellulose, thus proportioning the viscosity, adhesiveness and cohesiveness of the final glue.

24. A carbohydrate base for making glue composed of suitable carbohydrate which when mixed with about 3 parts or less by weight of water and a solvent of cellulose will form a semi-fluid mass having substantially the adhesive properties of animal glue.

25. A base for making glue as distinguished from mucilages, sizes and pastes, embracing treated amylaceous grains substantially insoluble in water and the outer so-called amylo-cellulose coating of which insoluble grains has been partially but not entirely converted.

26. A base for making glue composed of a starchy carbohydrate or its equivalent which when boiled for 10 minutes with dry hot steam at 100 pounds pressure with nine parts of water and tested for viscosity while hot will show a viscosity between that of cold water and three times that of cold water.

27. A base for glue as distinguished from mucilages, pastes and sizes, comprising treated cassava amylaceous grains in which the proportion of so-called cellulose is greater than in the natural material from which the base is derived.

28. A glue comprising cassava carbohydrate rendered semi-fluid by digestion and having substantially the properties of animal glue.

29. A glue comprising chiefly starch dissolved by a digesting agent alkaline to phenolphthalein and in about 3 parts or less by weight of water.

30. A wood and fiber glue formed of a starchy carbohydrate or its equivalent by union therewith of about 3 parts or less by weight of water and alkali metal hydroxid.

31. A wood and fiber glue containing amylaceous material as a base dissolved without acid in about three parts of water or less, and being viscous, semi-fluid and unjellified.

32. A glue as distinguished from mucilages, sizes and pastes containing a starchy carbohydrate base substantially insoluble in water and dissolved by caustic and containing free caustic.

33. A glue consisting of a vegetable carbohydrate base substantially insoluble in water and dissolved by water and caustic soda alkali, the amount of water being about three parts or less by weight of dry carbohydrate and the amount of caustic present being about 10% or less by weight of the dry carbohydrate.

34. A glue consisting of a vegetable carbohydrate base substantially insoluble in water and dissolved by caustic alkali, the amount of water being about three parts or less by weight of dry carbohydrate.

35. A glue containing a starchy carbohydrate base dissolved by a solvent of cellulose and water, the amount of water in the glue being about three parts or less by weight of dry carbohydrate.

36. A glue as distinguished from mucilages, sizes and pastes, consisting chiefly of a starchy carbohydrate base substantially insoluble in water and dissolved by a solvent of cellulose.

37. A glue composed of a starchy carbohydrate base and a solvent of cellulose and having such a character that it will be substantially unaffected by the natural humidity and having substantially as good adhering qualities as the best animal glue.

38. The process of making a wood glue which consists in suspending a glue base containing amylaceous matter insoluble in water in about three parts or less by weight of water and treating the base with an alkali properly proportioned substantially as described to produce a glue having a lasting viscosity to flow through pipes and the adhesiveness of animal glue.

In testimony whereof, I have signed my name to this specification, in the presence of two subscribing witnesses.

FRANK G. PERKINS.
By GERTRUDE S. PERKINS.
Executrix of the last will and testament of Frank G. Perkins.

Witnesses:
S. D. TAYLOR,
L. MCMILLEN.

GERTRUDE S. PERKINS,
Executrix of the last will and testament of Frank G. Perkins.

Witnesses:
S. D. TAYLOR,
L. MCMILLEN.

[L. S.] PERKINS GLUE COMPANY,
Assignee,
By JULIUS B. B. STRYKER,
Vice President.

Witnesses:
ABRAHAM A. DELP,
J. B. SMITH.

UNITED STATES PATENT OFFICE.

MARK W. MARSDEN, OF CONNELLSVILLE, ASSIGNOR TO JAMES W. CAMPBELL AND ALEXANDER MATCHETT, OF PITTSBURG, PENNSYLVANIA.

ADHESIVE PASTE.

SPECIFICATION forming part of Letters Patent No. 376,445, dated January 17, 1888.

Application filed January 20, 1887. Serial No. 225,089. (No specimens.)

To all whom it may concern:

Be it known that I, MARK W. MARSDEN, of Connellsville, in the county of Fayette and State of Pennsylvania, have invented a new useful Improvement in Adhesive Paste; and I do hereby declare the following to be a full, clear, and exact description thereof.

My invention relates to an improvement in adhesive flour paste. This substance is largely used in the arts for very many purposes, and is commonly made by boiling flour or starch and water until it attains the proper consistence. The disadvantage of paste prepared in this way is that it is difficult to prepare it without lumps and of a homogeneous composition, and that it is apt to spoil and to produce an unpleasant odor. This last-named feature is specially objectionable when the paste is used in houses with wall-paper. The paste cannot be made without boiling water, and its preparation involves considerable trouble and is disagreeable.

To avoid these objections and to provide an efficient flour paste prepared by chemical action is the object of my invention.

To this end my invention consists, first, in a paste compound containing flour, starch, or other farinaceous substance, with an alkali, preferably caustic soda, ($NaHO_2$) or caustic potash, (KHO_2) or some other strongly-alkaline substance. If the flour be mixed with any of these substances in the form of powder in the proper proportions they form a compound which, when mixed with water, will soon assume the consistence of a paste and will become soluble in water. The action of the alkali on the flour bursts the starch-cells and digests or dissolves it, increasing its bulk and reducing it to a paste, which may be thinned by the addition of water or thickened by the addition of more of the alkali and flour. This compound is sold as a powder to be mixed with water by the user.

The proportion of ingredients which I have found suitable for this form of paste is as follows: about eighty-four parts of flour, &c., to eight parts of pulverized caustic soda or caustic potash. If another form of alkali—such as strong soda ash—of less strength than the caustic soda or potash be used, its quantity should be increased until sufficient be had to thoroughly digest the flour; but I have found that in order to digest the flour with rapidity a strong alkali must be employed.

Substances weakly alkaline—such as bicarbonate of soda—are not strong enough to digest the flour. They must be strongly alkaline, by which I mean sufficiently strong to act on the flour and to make it pasty.

Paste compounded in this way may be used for some purposes; but it possesses an objectionable feature in that it has a strongly-alkaline reaction, and is apt to discolor paper, especially when the paper is colored or tinted, as is the case with most kinds of wall-paper and labels. To prevent this and to provide a neutral dry paste compound is the object of the second feature of my invention. It consists in a compound containing certain ingredients adapted to the neutralization of the alkaline paste prepared as above described. Thus, if oxalic acid, tartaric acid, or other acid in a solid form be added to the compound, it will, when water is mixed in with the mass, combine with the alkali to form a neutral salt. The proper amount of acid to be added to the mixture depends upon the nature and strength of the alkali and acid used, and is easily determined. The action of this compound is not altogether perfect, because the acid and alkali, being both made active at once by solution in water, will to some extent react on each other to make a salt before the flour is completely digested. A larger quantity of these substances than is chemically necessary under other conditions must therefore be employed. The oxalic acid is also disadvantageous, because it is poisonous, and the tartaric acid is somewhat expensive. While, therefore, my invention may be practiced in this way, I prefer to use as a neutralizing agent, instead of the acids, ammonium sulphate [$(NH_4)_2SO_4$] or some other similar unstable compound, which, when exposed to the alkaline solution, will cause a double decomposition, whereby potassium sulphate or sodium sulphate, as the case may be, and ammonium hydrate are produced. I employ these ingredients in the following proportions: flour, starch, or other farinaceous substance, eighty-four parts; pulverized

caustic soda or caustic potash, eight parts, (a greater quantity of alkali should be used in case some weaker alkaline substance is employed, as described above;) sulphate of ammonium, eight parts. These materials, when thoroughly mixed together, constitute the completed paste compound in its commercial form. To apply it to use, I add to it a little water. The water dissolves the alkali and the ammonium sulphate, and immediately the following reactions take place: The alkali quickly digests the flour, in a few minutes swelling it up and reducing it into a paste, which gradually grows thicker in consistence. At the same time, but much more slowly, the ammonium sulphate acts on the strong alkali, and a double decomposition takes place, which results in neutral potassium sulphate or sodium sulphate, as the case may be, an ammonium hydrate, which latter passes off slowly as a gas, thereby gradually decreasing the alkalinity of the mixture. This reaction is slow, and therefore the ammonium sulphate does not neutralize the strong alkali until after the flour has been completely digested. After the completion of this process, the paste, if not of the desired consistence, may be made more fluid or thicker by the addition of water or of the paste compound. The paste is very strong and adhesive. After it is mixed it is free from lumps, and it will remain in condition for use for several weeks without spoiling. It is not liable to fermentation and decay and is not poisonous. An especial advantage is its convenient form and the ease with which it may be mixed for use. As a powder, it may be preserved without change indefinitely if kept in a dry place, and the fact that a given quantity of the powder will make about eight times its own volume of paste makes it easy to handle commercially and to transport. It will be found to be an efficient article for wall-paper, labels, book-binding, and for shoe makers' use, as generally for all uses to which ordinary flour paste is put. It is better than the flour paste, because of its homogeneity and greater adhesive properties.

I am aware that in English patent to Lake, No. 520 of 1879, there is described a process of making vegetable glue by opening the glutencells of potato starch by the action of alkalies, and then treating the product with salts alone or with salts and acids; but no salts have been employed which unite with the alkali to form a neutral compound in the manner in which the ammonium sulphate of my compound acts.

I therefore claim as my invention—

1. The hereinbefore-described method of making paste, which consists in treating a farinaceous substance with a strong alkali, whereby said substance is digested, and neutralizing said alkali with an ammonium salt, substantially as and for the purposes described.

2. A dry paste compound consisting of a mixture of flour, starch, or other farinaceous substance and a strongly alkaline dry substance—such, for example, as caustic soda—whereby the flour, &c., is digested, substantially as and for the purposes described.

3. A dry paste compound consisting of a mixture of flour, starch, or other farinaceous substance, an alkali, and a dry substance which, when in solution, has an affinity for the alkali and is of a property to neutralize it, substantially as and for the purposes described.

4. A dry paste compound consisting of a mixture of flour, starch, or other farinaceous substance, an alkali, and ammonium sulphate, substantially as and for the purposes described.

In testimony whereof I have hereunto set my hand this 18th day of January, A. D. 1887.

MARK W. MARSDEN.

Witnesses:
W. B. CORWIN,
THOMAS W. BAKEWELL.

238 UNITED STATES PATENT OFFICE.

CHARLES M. HIGGINS, OF BROOKLYN, NEW YORK.

ADHESIVE.

SPECIFICATION forming part of Letters Patent No. 579,827, dated March 30, 1897.

Application filed March 30, 1896. Serial No. 585,475. (No specimens.)

To all whom it may concern:

Be it known that I, CHARLES M. HIGGINS, a citizen of the United States, residing at Brooklyn, in the county of Kings and State of New York, have invented certain new and useful Improvements in the Manufacture of Flour and Starch Pastes, of which the following is a specification.

The object of my invention is to produce an improved paste or adhesive compound directly from common flour or starch which shall possess much greater adhesive power and tenacity and more homogeneity and durability than any previous starch or flour paste and which shall even be superior to pastes made directly from dextrine and be producible at much less cost and with greater ease and facility of manufacture.

In making my improved paste I digest the flour or starch directly in hot water impregnated with a free acid or other digesting agent adapted to dissolve the gluten and convert or digest the starch into a soluble or partly-soluble form, and I continue the digestion rapidly until the pasty mixture becomes partly or fully liquefied at or about 190° Fahrenheit, and I then run the liquid solution into jars or receptacles and allow the same to cool and rest until the contained liquid assumes a pasty form. Previous to running off the liquid solution I add a neutralizing substance to neutralize the acid, preferring for this purpose borax in excess or such ingredients as will form borax in the solution, for I find that while borax or boric acid have no action on either raw or boiled starch they enter into chemical combination with it as soon as it acquires a soluble or partly-soluble form and render its solubility permanent and greatly add to the adhesiveness and homogeneity of the resulting paste.

My invention therefore consists, mainly, in the features above outlined, as hereinafter fully set forth and claimed.

In making my improved paste or adhesive compound I can use any of the ordinary cereal flours made from wheat, rye, rice, corn, &c., or any of the starches from corn, wheat, potatoes, &c., or any mixture of the same, each material producing compounds or pastes of individually-different qualities adapted for different purposes, as will be understood. I will therefore now fully describe my novel process of paste manufacture, and I will first give a model formula which may be used with any of the flours or starches or with mixtures of the two and which will epitomize the process and enable it to be seen in a paragraph.

To one gallon of water add about one fluid ounce of commercial sulfuric acid and six ounces (avoirdupois) of boric acid. Heat this acidulated water to about 145° Fahrenheit and add four pounds of the desired flour or starch. Mix thoroughly, and while the mixture is kept continually stirred or agitated continue the heat and raise it rapidly to about 195° or thereabout until the resulting pasty mixture becomes partly or fully liquefied. Then stop the heat and add four to five fluid ounces of caustic soda-lye of 40° Baumé, which will neutralize both acids in the solution and give it an alkaline reaction. After the foregoing have been well mixed finally add three fluid ounces of aqua-ammonia of 20° Baumé, which is about one sixty-fourth of the volume of the solution, and mix intimately. Then run the hot neutralized solution directly into jars or other receptacles in which the product is to be sold and cool the same and let them rest until the contents assume a soft or firm pasty form, according to the consistency desired, and the product will be then ready for the market.

In the above process the acidulated water should be heated preferably in a jacketed steam-kettle so constructed that a large quantity of heat can be applied rapidly and steadily to the mass, as rapid and even action of the heat is important in the process. The cooking-kettle should also be provided with an energetic stirrer or mixer kept in constant motion during the process, and this stirrer should be very strong and powerful to move the thick pasty mass which is formed when the temperature reaches 150° to 160°. The complete process described usually takes from about twenty to forty minutes from the moment when the starch is added to the time when the solution is neutralized and run off, and its phases are about as follows: In about three minutes after adding the starch the mass stiffens into a white dough at about 150°. In six minutes, at 155°, a stiff white jelly is formed. In ten minutes, at 165°, this changes

to a translucent jelly, and in about fifteen minutes, at 170°, it becomes a soft translucent jelly, gradually liquefying. In about twenty minutes this soft jelly becomes fluent, at about 180°, and in about five minutes more changes to a liquid jelly, opalescent in color, at about 185°. In, say, thirty minutes the mass becomes a syrupy opalescent liquid at about 190°, and from 190° to 200°, within a total of thirty-five to forty minutes, the liquid becomes a little thinner, but is yet opalescent.

It will be understood that where the volumes or masses acted on are very large the time required to reach each of the phases stated will be somewhat longer, depending on the time necessary for the heat to penetrate the mass to the stated temperatures. The times given are absolutely correct for the model formula, but will vary somewhat for larger masses, as will be readily appreciated.

It will be noted that by heating the acidulated water as high as possible, but below or about the temperature of the paste formation, and then adding the dry starch or flour directly thereto and mixing vigorously while continued heat is applied, the operations of mixing and digesting are simplified and the process rendered rapid, direct, and continuous and on the whole mass of starch at once, which is important for this purpose. On the contrary, if the starch were separately mixed in a milky fluid with a portion of water, which was then poured into the main portion of highly-heated acid-water, as is usually done in making glucose, the operation would be more indirect and troublesome and consume much more time, and the first part of the starch would receive more heat action than the last and the starch would remain much longer under the converting action, which would cause it to pass completely over into the dextrine or glucose state, which it is important to avoid in this process. Instead, however, of first heating the acidulated water to about 145° and then adding the starch the starch may be added to the acidulated water when cold and the heat and agitation then applied continuously until the process is completed, as described.

Any other digesting substance or acid may be used in lieu of the sulfuric, but this I consider much preferable, as less of it is required, and its action is much quicker and its neutralization forms simple and harmless sulfates in the final product which are in no way objectionable, for it will be noted that in my process the products of neutralization remain in the finished product. If sulfurous acid be used as the digester, a sulfite will be left in the product, which will act as an antiseptic and be actually advantageous. Malt may also be used as the digesting agent, but with this the temperature has to be carefully kept at or below 160°, and it is more likely to develop the sugar or glucose state immediately and to form a thinner and darker product, and I therefore prefer acids, as set forth.

The boracic acid, while having no action on raw or boiled starch, as before stated, acts in the presence of the sulfuric acid to assist in the digesting action, and, what is still more important, enters into chemical combination with the starch as soon as it becomes changed to a soluble or partly-soluble form and holds it in this state and renders its solubility permanent. When this boracic acid is subsequently neutralized by the caustic soda, it becomes changed into borax, which makes still more energetic combination with the digested starch and renders it much more adhesive and tenacious, greatly increases the body of the solution, and renders it more smooth and homogeneous. This combination of the boron compound takes place more effectually at a hot temperature. The ammonia or other caustic alkali added after the formation of the borax acts to produce a still further thickening effect and further increases the adhesiveness of the compound, and also renders it perfectly proof to decay, while the presence of the volatile alkali is not objectionably apparent to the senses. This action of the ammonia or other caustic alkali, however, will take place perfectly at a hot or cold temperature, but I prefer to add it at about 150°.

Another effect of the boron compound in the presence of the alkali is to prevent the alkali from darkening the color of the paste, for if the boron compound were omitted great care would have to be used in adding the neutralizing alkali, so that exact neutrality was reached as the slightest excess of the caustic alkali would render the paste very brownish or yellowish, whereas in the presence of the boron compound a small excess of alkali, which is really desirable, has no effect on the color, which in this case remains creamy in the flour pastes and pure white in starch pastes, which is a most important advantage.

The proportion of ingredients may of course be altered where a thicker or thinner paste or adhesive is required, as I have given about the average proportion in the model formula; but the flour or starch may vary from, say, three or less to seven or more pounds to the gallon of water, two to seven being about the extremes, while four to five is the medium. The proportion of other ingredients should vary to correspond with the starch or flour, except the digesting-acid, which is preferably increased a little, but need not necessarily increase in proportion to the increase of flour or starch, but should always increase where the proportion of the water increases.

It should be understood that where the amount of acid is reduced or the proportion of starch is increased from that set forth in the model formula the time required to complete the process will be longer than thirty or forty minutes and may extend to sixty minutes, more or less, according to the proportions of starch and acid, and, *per contra*, where

the amount of acid is increased or of starch decreased the time required will be less than that given for the model formula, as will be understood.

A greate proportion of acid may be used than that stated, but I prefer to limit it to the lowest practicable, as I desire to avoid the full conversion of the starch into dextrine and glucose, which is likely to happen if much acid is used and if the heat and digesting action are continued long or if the temperature be very high. I therefore prefer not only to have the digesting action as direct and rapid as possible and uniformly on the whole mass of starch at once, as described, but to arrest this action just when actual digestion takes place, that is, when the starch changes from the gelatinous to the fluent form, but while it is still whitish or opalescent and before transparent or clear thin fluidity occurs, which preferred condition will occur in my process as described in from twenty to thirty minutes or thereabout after the starch is added, thus making the process as rapid and simple, if not more so, than the common process of boiling a simple starch or flour paste.

Instead of adding boracic acid to the acidulated water I may omit it altogether, but afterward add borax to the digested solution in place of the caustic soda, which will then neutralize the digesting-acid and combine with the digested starch. In the formula given the correct proportion of borax would be about fourteen ounces, a large excess over neutrality being desirable to combine with the digested starch, and this I would add before the starch becomes fully liquefied and while in in the state of a soft fluent jelly at about 175° to 185°. When added at this point, the borax has the effect of thinning the solution and renders the starch more soluble and combines with it to make it permanently soluble. The borax may be added later, say, from 190° to 200°, but if added too late, say, beyond 200°, it would be likely to render the product too thin or liquid, as it seems to exert an actual digesting action on the starch after this action has been started by the digesting-acid; but of course where a very thin product is desired the heat can be continued and the borax added later. In the same way if the heat and digesting action were continued too long or much above 195° and much over thirty or forty minutes unless the proportion of starch were very large or of acid were very small, the starch would have passed over too much into the state of veritable dextrine or glucose, and the product when finished would not be a more or less fluent paste of great adhesive power and good body or viscosity, but rather a thin liquid of diminished adhesive power, which it is desirable to avoid. Hence by conducting the process rapidly and uniformly and arresting the digestion before the state of veritable dextrine is reached and at the point where the starch becomes soluble, or partly so, and where it is capable of combining with the boron compound, a very novel paste or adhesive compound of great value is produced, for it possesses far more adhesive power, more body, and viscosity than is possessed by any paste that can be made from dextrines, for in this case it seems that the starch simply loses its gelatinous insoluble form and acquires a state of white glutinous viscid solubility which may be said to be a distinct state. Hence I prefer to arrest the digestion, as before stated, at the point where the starch ceases to be pasty or gelatinous and where it becomes fluent, but before it has lost its white or opalescent color, while it still gives a blue, violet, or purple color with iodin before it becomes transparent and thin and before it gives the decided reddish or claret-wine color with the iodin. It will be understood, however, that where the amount of acid is reduced the maximum temperature may be higher without carrying the conversion beyond the condition stated, and *per contra* where the acid is increased a lower maximum temperature can be used.

By arresting the digesting action earlier or later, that is, anywhere between the point where the mixture becomes a fluent jelly to the point where it becomes a thin liquid, different degrees of body or consistency can be imparted to the finished product, which is an important advantage of this process, as will be understood. A firmer consistence can also be imparted to the finished product by a forcible or continued cooling or refrigeration of the solution when run into the jars on the principle set forth in my United States Patent No. 546,401, of September 17, 1895. In the aforesaid patent the consistency of a dextrine paste is regulated and determined by limiting the heat in making the solution and in afterward applying continued cold or refrigeration to the liquid when bottled or sealed; but this will not be necessary in my present process unless the digestion has been carried too far, because by arresting the digestion at the desired point when the solution is neutralized and run into the jars a simple rapid cooling will usually set the paste into the desired consistency, which is a further advantage of this process.

In the United States Patent No. 466,239, of December 29, 1891, I describe and claim a combination of dextrine with a boron compound combined in hot aqueous solution with an alkali afterward added thereto. It will be noted that my present invention covers the boron compound united directly with starch while being digested or in a soluble state or as it is approaching incipient or nascent dextrine, which is a new discovery of great advantage, as it enables an adhesive compound to be produced directly from common flour or starch, which is far superior to that which can be produced from dextrine and at far less cost. Indeed, so much is this the fact that by my new process three or four pounds of starch to one gallon of water may be made to

produce a paste of greater body and adhesive power than can be produced with five to six pounds of dextrine and at about one-third the cost, thus producing most valuable results. In addition to this advantage of body, adhesiveness, and cost the pastes made by the new process are far superior in appearance in possessing a much lighter and purer color and are much more uniform in quality, and their consistencies and other properties can be more readily and uniformly regulated at will than is the case with pastes made from dextrines.

A great variety of pastes or adhesive compounds can be produced by this system adapted for almost all purposes and at costs to suit all purposes from the lightest to the strongest work by the use of different flours or starches or mixtures of them and of greater or less densities, according to the proportions used, and as I have fully set forth the process and the best conditions for the manufacture and the best proportions and variations it will not be necessary to specifically describe each individually different product which might be produced. I will mention, however, that some most remarkable adhesives can be produced by this process which can be readily substituted for glues and gelatins in many kinds of work. For example, when from five to seven pounds of corn-starch to the gallon of water is used in the formula given a glue-like paste is produced which is almost equal to the best animal glues and has the most extraordinary cementing power for fibrous and absorbent substances, as it will unite wood to wood nearly as firmly as gelatin, that is, the joint cannot be separated without breaking the wood at some point, and it will also unite leather to leather or leather to wood, so that the leather will tear or laminate in attempting to separate the joint. This paste is of a pure creamy white, slightly translucent, and in general qualities it could be readily mistaken for a solution of the best gelatin except that it has a much whiter and more opaque color and has about the same consistency and flowing qualities in the cold that a strong solution of gelatin or isinglass has when hot, that is, it will spread with great ease and smoothness, does not sink into absorbents, and adheres at once and with great tenacity to almost all substances and is so very glutinous and tenacious that it will draw or spin out into ropy or silky threads when manipulated, so much so that it would be difficult to convince the ordinary observer that it is not a remarkably white and fine glue instead of being purely a starch cement.

In the case of simple flour pastes made by this process not only is the cost no greater than in the usual process of making common flour pastes, but a flour paste of most unique and superior qualities is produced. It will be noted that in my process not only is the starch of the flour rendered soluble, but so also is the gluten, which becomes dissolved by the weak digesting-acid at the outset and also by the borax and alkali afterward added. Hence both ingredients of the flour, representing, in the case of wheat, sixty-seven and thirty-three per cents. respectively, become changed into a soluble tenacious form and united in perfect combination or solution in the water of the paste, whereas in ordinary flour paste the sixty-seven per cent., of starch is always more or less inert and separable. Hence my new flour paste is not only homogeneous and permanent, but has unusual body-density and adhesive power, is very smooth and spreads easily, does not show watery separation, and is practically proof to decay, and thus presents a great advance in the art of paste manufacture.

As the process herein described of making an adhesive paste from flour or starch with or without the boron compound is novel, I do not of course limit myself to the inclusion of the borax or other boron compound, and hence any other suitable substance may be used in neutralizing the digesting-acid, or this substance may be sometimes omitted for purposes where a small trace of acid in the paste will not be objectionable.

I am aware of the process described in the English Patent No. 2,810 of 1865, but this is distinct from my invention, as in that patent the starch is converted into gum or dextrine, and the product is a thin fluid or size for saturating textiles. In my process the starch is not converted into dextrine, but into an intermediate state between starch and dextrine, and the product is a tenacious paste having great cementing power.

I lay no claim to what is known in technical chemical books as "soluble starch"—viz., an alleged form of starch which has been separated from a solution of common starch during the process of its digestion from gelatinous paste to actual dextrine. This soluble starch has usually been obtained from a liquid filtered solution or separated from a dextrine syrup from which it has been precipitated in the form of granules or powder, which powder or granules are soluble in hot water, but not in cold water. My invention does not relate to the production or isolation of any such substance.

My invention consists, essentially, in a new process of making an adhesive paste from raw starch or flour, which consists in heating the starch paste in a digesting fluid until the whole mass becomes changed to a fluent or partly-soluble form, but not converted into dextrine, arresting the action at this point and then cooling the whole fluent mass and causing it to set into a semifluid or pasty form. This has not been heretofore done, and it forms an absolutely novel process and product in the art of paste manufacture.

In order that my improved process and product be more effectually distinguished and differentiated from what has been heretofore known, it is proper that I here describe what

I consider to be certain distinct stages in the transformation of the starch particle, which are as follows:

First. The "gelatinous" or simple "swelled" state, such as exists in simple starch paste made with raw starch and hot or boiling water. The condition produced by the action of dilute cold solutions of caustic alkalies on raw starch is also merely the gelatinous condition and is substantially the same as that produced by the action of hot water. There is a second stage, however, in the transformation, which I call the "glutinous" stage, where the starch loses its thick inert gelatinous form and becomes glue-like and fluent, capable of being spread like liquid glue and having an extraordinary adhesiveness, like glue.

Third. The "soluble-starch" state, where the starch particle is still more transformed, approaching a gummy condition, but not yet actually dextrine, and forms more or less pasty mixtures when sufficiently dense.

Fourth. The actual clear gummy or dextrine state, which is freely soluble in cold or warm water and forming dense permanently-fluid solutions, either hot or cold.

Fifth. The glucose or sugar stage, intensely soluble in water.

Now the second and third stages are what are produced in my process and product, usually a combination of the two, although it may be almost wholly one or the other, according as the digestion has been arrested earlier or later, as already described. The greatest adhesive power of the starch, however, lies in the glutinous stage, which is a fact not heretofore properly known or appreciated. In the gelatinous stage the starch is practically inert and has little adhesiveness, as the particle or granule is merely swelled up and has not yet entered into actual solution or combination with the water and requires such a very large percentage of water to thus swell it up into a spreadable paste that the gelatinous mixture is very weak or dilute as regards the actual percentage of starch involved. In the glutinous stage, however, the starch particle begins to enter into actual solution or combination with the water, and a comparatively dense fluent solution of extraordinary adhesiveness can be obtained about twice or four times the density that can be obtained in the gelatinous state, which same density in the gelatinous stage would be almost solid, rubber-like, or wholly non-fluent and inert. After the starch particle passes the glutinous stage it gradually loses its greatest adhesive strength, but acquires greater solubility, so that when it has reached toward the end of the soluble stage and entered the dextrine stage it is so very soluble as to make very dense and permanently-fluid solutions, either hot or cold. Its loss of adhesive strength at these stages, however, can be made up partly by increased density of solution, but never with the same quality that it possesses in the glutinous stage, where a density of half the strength will give as much body and more actual adhesiveness than twice the density in the early or late part of the dextrine stage. Now the soluble starch heretofore referred to as mentioned in chemical books is something which has been separated or isolated from the fluid solution at a stage in the transformation where the solution becomes permanently fluid and beyond either of the stages produced in my invention.

What I claim as my invention is—

1. The improved process of making a flour paste, consisting in digesting the flour in hot water impregnated with a digesting substance until the gluten is dissolved and the starch rendered soluble, or partly so, and the mass thereby liquefied, then arresting the digesting action before it becomes converted into dextrine and cooling the liquefied mass and allowing it to rest until it sets into a semi-fluid or pasty form, substantially as herein set forth.

2. The improved process of making a starch paste herein described, consisting in digesting raw starch in a hot digesting liquid till it becomes fluent and in that glutinous or soluble state before it becomes converted into dextrine, arresting the digestion at this point, and finally running the fluent mass into jars or receptacles and allowing the same to cool and rest until set into a semifluid or pasty form, substantially as herein set forth.

3. The improved process described of making a starch or flour paste, consisting in heating a mixture of starch or flour with water impregnated with a digesting-acid rapidly to or about to 190°, arresting the heat and digesting action when the mixture becomes liquefied and while in that white or opalescent glutinous or soluble state before it becomes converted into dextrine, adding a neutralizing substance to the solution and allowing the same to cool and rest until set into a semi-liquid or pasty form, substantially as herein set forth.

4. The process of making an improved starch or flour paste in the manner and proportions described, viz., adding to a given mass of digesting fluid a mass of starch or flour equal to half or more of the weight of the fluid, keeping the mixture agitated and applying heat to the whole mass uniformly at once until it reaches 190° or thereabout and becomes an opalescent liquid, arresting the action before it becomes converted into dextrine, and finally cooling the said liquid until set into a pasty form, substantially as herein set forth.

5. The improved process of making a starch or flour paste, herein described, consisting in digesting raw starch in a hot digesting liquid till it becomes fluent and in that glutinous or soluble state before it becomes converted into dextrine, arresting the digestion at this point and finally running the fluent mass into jars or receptacles and applying continu-

cold or refrigeration thereto until the liquid contents are set into a pasty form, substantially as herein set forth.

6. The improved process of making a starch or flour paste, consisting in digesting the starch or flour in hot acidulated water till it becomes fluent and in that glutinous or soluble stage before it becomes converted into dextrine, then adding to the acid solution an alkaline sodium compound in excess to neutralize the acid and give the solution a decided alkaline reaction and then cooling the solution until set into a semifluid or pasty form, substantially as herein set forth.

7. An improved adhesive compound consisting essentially of starch digested in water till it becomes fluent and in that glutinous or soluble stage before it becomes converted into dextrine, and then arrested and cooled in this state, forming a homogeneous tenacious paste, substantially as herein specified.

8. An improved adhesive compound consisting of starch digested in water till it becomes wholly or partly fluent or soluble but before it becomes converted into dextrine, and then combined with a boron compound, forming a homogeneous tenacious paste, substantially as herein set forth.

9. An improved adhesive compound, consisting of starch digested in water into a fluent or soluble form in that state preceding the conversion into dextrine and then combined with a boron compound with a caustic alkali afterward added thereto, substantially as and for the purpose herein set forth.

10. An improved adhesive paste or compound formed by heating a mixture of starch and water with a converting-acid in the presence of dissolved boracic acid until liquefied, and then adding caustic soda to neutralize both acids and form borax in said solution, substantially as set forth.

11. The specific process herein described for making an improved paste directly from starch or flour, viz., mixing the dry starch or flour with acidulated water at a temperature below or about the paste formation, and keeping the mixture constantly agitated while the heat is applied, continuing the heat and agitation till the pasty mixture becomes liquid and attains a temperature of 190° Fahrenheit, or thereabout, adding a neutralizing substance to the solution, discontinuing the heat and running the hot neutralized solution into jars or packages and causing the same to cool and rest until the liquid assumes a semiliquid or pasty form, substantially as herein set forth.

CHAS. M. HIGGINS.

Witnesses:
JNO. E. GAVIN,
HENRIETTA H. NICOLAI.

UNITED STATES PATENT OFFICE.

CHARLES M. HIGGINS, OF NEW YORK, N. Y.

PROCESS OF MAKING ADHESIVE PASTE.

SPECIFICATION forming part of Letters Patent No. 642,329, dated January 30, 1900.

Application filed December 31, 1898. Serial No. 700,837. (No specimens.)

To all whom it may concern:

Be it known that I, CHARLES M. HIGGINS, a citizen of the United States, residing in the borough of Brooklyn, in the city and State of New York, have invented a certain new and useful Improvement in Processes of Making Adhesive Pastes, of which the following is a specification.

The main object of my invention is a process of making a white dextrine paste in a manner which will be cheaper to manufacture and will produce a product of better and more uniform quality than that produced by the methods heretofore employed.

In the manufacture of dextrine pastes heretofore the dextrine is first produced in a dry powdered form by impregnating potato or corn starch with a small percentage of a converting-acid and agitating the same in a heated drum or chamber until the starch is all converted into the form of a soluble white dextrine powder. This powdered white dextrine is then dissolved in hot water in the proportion of between four and six pounds to the gallon, and the hot liquid solution of dextrine is then cooled and set into a non-fluid or pasty form, such as described in my United States Patent No. 546,401, of September 17, 1895. One objection or difficulty found in this method is due to the variations in the dextrines produced by the dry process, for in the manufacture of this dry dextrine great care has to be used to arrest the conversion at the right point and prevent it being carried so far as to go beyond the stage of the white dextrine into the yellow stage, and thus produce a product which would be too soluble, too fluid, and too dark and which would thus be more or less unfit for paste-making. Now this point is very difficult to regulate or control exactly on account of the practical impossibility of regulating the heat through a large mass of dry powder, and hence, as a matter of fact, all commercial white dextrines vary more or less in color and solubility in individual lots. These variations always exist in some degree with white potato dextrine, but in much more marked degree with white corn dextrine, which always varies much more in solubility and viscosity than the potato dextrines and always possesses a much darker color than the potato dextrine, so much so that no really true white dextrine has yet been commercially produced from corn-starch. Hence these unavoidable variations in the color, solubility, and viscosity of the dry white dextrine as now found in commerce cause corresponding variations in all pastes made with them by the present process, whereas in the case of the cheaper corn dextrine its color is so dark, its viscosity so much less, and its variations so much more that its use is precluded altogether in the manufacture of fine white dextrine pastes.

Now the object of my present improvement is to enable a pure white dextrine paste to be produced from corn or other starch in a simpler and less expensive manner than by the old method and in a way which will avoid all these variations and enable the dextrine paste to be produced uniform in color and consistency at will, and particularly from corn-starch alone. To this end I digest the starch in hot water impregnated with a digesting acid or agent in the proportion of about five pounds of the starch to the gallon of water and I continue the digestion until the starch becomes completely fluent and converted into veritable white dextrine, and I then arrest the digestion at this stage and add a neutralizing alkali, and finally cool the solution and cause it to assume a soft unctuous pasty form. By this process I can produce very rapidly from corn-starch a white dextrine paste having a pure white color and of a uniform or easily-regulated consistency and at much less cost than by the old process; and a marked advantage of this process is that I can employ common corn-starch only and yet produce a pure white soft unctuous dextrine paste equal in color and consistency and superior in adhesiveness to that produced from pure potato dextrine at about half the cost thereof, which is a most important result.

My invention therefore consists mainly in the specific process above outlined, as hereinafter fully set forth and claimed.

In describing the practical working of my invention I will first give a model or preferred formula, with the preferred proportions and kind of ingredients for producing the most preferred product of this invention.

To one gallon or eight pounds of water add

one fluid ounce of muriatic or equivalent acid and preferably three ounces avoirdupois of boracic acid, and when these acids are fully mixed or dissolved in the water add five to six pounds of raw powdered starch, preferably corn-starch, and mix the same together thoroughly, so as to produce a uniform milky mixture. I generally prefer to have the acid water heated to about 150° or 155° when the starch is added; but the acid water may be cold, if desired, when the starch is added and heat applied subsequently. The mixture of starch and acidulated water should be kept stirred or agitated to prevent the settling of the starch, and at the same time heat should be applied to raise the temperature of the mixture. The heating and stirring should be continued until a temperature near to, but below, the jellifying-point of the starch is reached—say between 150° to 165° Fahrenheit. I generally prefer a limiting temperature of about 150° to 155°, or just where the starch-milk begins to thicken into a "starch-cream," but does not actually jellify. When this point is reached, I arrest the heat and keep the mass at or near that temperature for some time—say from one-half to one hour or more, according to circumstances. During this time and at this temperature conversion or digestion of the starch will go on continuously and effectively, so that at the end of the half-hour or more it will be found that the starch will have become soluble and have lost its jellifying power without ever having entered the stiff pasty or gelatinous condition at all, which it would do were the digesting temperature carried to or above the jellifying-point at the outset. Hence as soon as this digested condition is reached I then raise the temperature above the jellifying-point, when the creamy starchy mass will immediately melt or liquefy without passing through the stiff rubbery pasty stage and will then assume different successive degrees of liquidity as the temperature rises. The length of time necessary to effect this change will of course vary according to the size of the mass acted on, the quantity and temperature of the heat applied, the density of the starch mixture, and the strength of acid solution, as chemists will readily understand; but a period of one-half hour to one hour near or at the jellifying temperature will generally be sufficient in all cases to render the starch non-gelatinous and capable of complete and immediate liquefaction as soon as the temperature is raised above this point. In the formula given when the temperature reaches 170° the consistency of the solution will usually be a liquid opalescent jelly. When it reaches 180° to 185°, it will be quite liquid and at about 190° very liquid. It will generally not be necessary to heat the solution above 195° or 200° unless very dense solutions are used. It will be necessary, however, to continue the digestion for a few minutes past both the stages, which I term, respectively, the "glutinous" and the "soluble" stages, and to advance the digestion into the stage of what is distinguished as "white dextrine," where the digestion should then be arrested. Where part of the digestion is conducted at a temperature below the jellifying-point of the starch, as described, it will only be necessary to continue the digestion at a temperature of about 180° to 195° Fahrenheit for a few minutes—say for about ten to twenty minutes—in order to produce the true stage of white dextrine, where the blue and violet reaction with iodin completely disappears and a distinct purple or reddish-purple coloration shows with the iodin test. When this point is reached, the heat is stopped and the digestion arrested, and the acid is then neutralized. For this purpose I prefer to use in the formula given one and one-half fluid ounces of caustic-soda lye at 40° Baumé, which will more than neutralize the amount of acids used and will give the mixture a slight alkaline reaction, which is generally preferred. The neutralized liquid is then run into jars or other receptacles and allowed to cool and set into a soft pasty form. When thus cooled and set, the product will be a very pure white paste of a soft unctuous pulpy consistency, spreading very smoothly and easily, having little tendency to strike into or warp the paper, with a great adhesive power, quick to adhere, and quick to dry, and one great advantage of this system is that the paste made by this process from corn-starch entirely will be equal to or superior to the pastes made from pure potato dextrine by the old process and at about one-half the cost, which is a most important advance in the art. Another great advantage is that the product will be much more uniform in color, consistency, and adhesive qualities than is possible with pastes made from either corn or potato dextrines by the old process. By the old process it has not been possible to make a pure white unctuous paste from corn dextrines, whereas by this process I can make such a paste entirely from corn-starch, which is superior in color, consistency, and adhesiveness to that made from the more expensive white potato dextrine.

It is proper that I should here state that the stage of white dextrine at which the digestion of the starch is arrested in this process is readily fixed, defined, and determined by the facts that at this point the blue and violet coloration with iodin completely disappears and a distinct purple or reddish-purple is produced with the iodin test and by the facts that the color of the paste solution when cooled is an opaque porcelain white and its consistency a soft unctuous pulp non-fluid at rest. Per contra, the stage of yellow or "erythro" dextrine would give a distinct red or brownish color with iodin without the positive purple and the color of the solution when cooled would be a more or less transparent amber and its consistency more or less syrupy

fluid. On the other hand, where the digestion is arrested before the dextrine stage is reached, as in my Patent No. 579,827, of March 30, 1897, the color reaction would be violet or violet inclining to purple and the consistency of the cooled solution would be more or less glutinous and not the soft unctuous pulpy consistency produced by the present process.

It may be observed that the great advantage of starting the digestion below or at the jellifying-point and continuing it until the starch loses its gelatinous quality and then finishing the digestion is that much more uniform digesting action is obtained, as the whole mass is acted upon uniformly at once. The temperature and chemical action being uniform throughout the mass, far less power is required to stir the mass and the time for completing the process is reduced, and the product of each lot is rendered very uniform in color, consistency, and adhesive qualities, which combined result has been a great desideratum.

It will be noted that I prefer that the first stage of the digestion be conducted at a temperature near to, but below, the jellifying-point of the starch; but I in no way limit myself to this special mode of applying or conducting the heating operation, as the heat may be applied in any other suitable or ordinary way, provided the digestion is carried to the stage of white dextrine and arrested there, as already described.

The product of this complete process will be quite distinguishable from the product of my Patent No. 579,827, of March 30, 1897. In that case the density of solution, degree of conversion, and adhesive and spreading qualities are all different. In the former patent the conversion is arrested in the "glutinous" or "soluble" stage and is not carried over into the actual dextrine stage. The average density of starch solution in the former case is less—say about four pounds to the gallon—and the consistency is more glutinous or glue-like. In the present process a minimum density of about five pounds—that is, from four and one-half to five pounds of starch to the gallon of water—is necessary for the desired result, and, furthermore, the conversion is carried beyond the glutinous or soluble stage completely over into the first dextrine stage, where the blue-color reaction with iodin disappears and where the purple or reddish color shows positively. The final consistency of this product is not glutinous or glue-like, but soft and unctuous, so as to spread very easily and smoothly, yet adhere and dry quickly and not sink into the paper as much as a less dense, but more glutinous mixture would be likely to do. Consequently the product of the new process is more especially adapted for very particular uses, such as for fine mounting purposes, where the particular consistency and qualities specified are of special importance and value and for which the more expensive potato dextrines made by the dry process have heretofore been used.

A greater density than five to six pounds to the gallon of water may be used for some especial pastes; but in such cases I prefer to carry the digestion a little farther still, so that the color reaction with iodin will be a very reddish purple, but still well within the white-dextrine stage; but for most purposes the range of a little less than five pounds up to six pounds will produce the best results.

I prefer to conduct the first stage of the digestion, as described, at a temperature near to, but below, the jellifying-point—say 145° to 155° Fahrenheit; but a much lower temperature than this can be used, if desired. If, however, a lower temperature is used, a longer time or more acid will be required for the digestion or to render the starch non-gelatinous, and vice versa, as will be understood.

Of course I do not limit myself to any particular kind of acid or digesting agent employed, nor to any kind of neutralizing substance, nor to any exact amount of the digesting or neutralizing agents, which may be increased or diminished. In some cases the neutralizing substance may be omitted where a slight trace of acid in the paste will not be objectionable.

It will not be necessary in all cases to cool the digested starch solution into the pasty form, as the solution may be retained in the hot liquid stage at the proper digested point, after which the temperature may be reduced somewhat and then used for some special purpose while still hot and liquid, as will be understood.

The product of the process herein described is not claimed in this application, but forms the subject-matter of a divisional application filed in complete form on November 1, 1899, and bearing Serial No. 735,554.

The particular manner of conducting the digestion in two steps—viz., first at or below the jellifying-point of the starch and then finally above the jellifying-point—is not necessary to my present process, although a desirable procedure therein. This particular method or procedure is, however, itself new in the digestion of starch; but I do not claim this feature in this application, having reserved it for the subject of a separate application for patent, filed April 13, 1899, Serial No. 712,879.

What I claim as new is—

1. The novel process of making a dextrine paste consisting in mixing starch with water impregnated with an acid or digesting agent in the proportion of about five or more pounds of starch to eight pounds of water, applying a digesting heat to the mixture until the starch becomes converted into white dextrine, then arresting the digestion and retaining the solution in said state whereby it is adapted to form when cold a soft unctuous white paste, substantially as herein set forth.

2. The improved process of making a dex-

trine paste, consisting in mixing starch with water impregnated with a digesting agent in the proportion of about five or more pounds of starch to eight pounds of water, applying and continuing a digesting heat thereto until the starch becomes converted into white dextrine, then arresting the digestion at this point and finally cooling the solution into the form of a soft unctuous or pulpy paste, substantially as herein set forth.

3. The process of producing an improved adhesive paste consisting in mixing starch with acidulated water in the proportion of about five or more pounds of starch to eight pounds of water, applying and continuing a digesting heat thereto until the starch is converted into white dextrine, then adding an alkaline substance to neutralize the acid and then cooling the neutralized liquid into the form of a soft unctuous paste, substantially as herein set forth.

In testimony whereof I affix my signature, in the presence of two witnesses, this 30th day of December, 1898.

CHAS. M. HIGGINS.

Witnesses:
JNO. E. GAVIS,
WALTER E. CLENDANIEL.

UNITED STATES PATENT OFFICE.

LÉON CERF, OF LYONS, FRANCE.

PROCESS OF MAKING MODIFIED STARCH.

SPECIFICATION forming part of Letters Patent No. 698,632, dated April 29, 1902.

Application filed July 3, 1901. Serial No. 67,066. (No specimens.)

To all whom it may concern:

Be it known that I, LÉON CERF, a citizen of France, residing at Lyons, France, have invented certain new and useful Improvements in the Process of Making Modified Starch, of which the following is a full, clear, and exact description, and for which I have made applications for patents in France on the 29th day of April, 1901, and in Great Britain on the 25th day of May, 1901.

The invention has for its object the transformation of amylaceous matters into soluble substances. This result is obtained by treating these matters with persulfates in presence of water. This treatment is particularly applicable to amylaceous matter extracted from the roots of plants—potatoes, tapioca, &c.—which it transforms into products soluble in water and giving gelatinous solutions, to amylaceous matters—such as starch of wheat, maize, rice, &c—and finally to natural products containing various proportions of amylaceous matters—for example, those obtained by grinding of wheat, sorghum, maize, cocoa, and other alimentary subetances. The products obtained are characterized by their complete neutrality after washing and by their solubility, which permits of their use for numerous applications, and particularly to replace gelatin in many industrial uses.

The following is an example of this treatment applied to fecula: Mix one hundred kilograms of fecula with five kilograms of dry persulfate of ammonia. Add one hundred and fifty liters of cold water, agitate the mass. Oxygen is disengaged according to the formula:

$$S_2O_8(A,H_4)_2+H_2O=SO_4H_2+SO_4(A,H_4)_2+O.$$

Allow the action to continue during about twelve hours, continuing to agitate the mass from time to time. After this lapse of time the starch of the fecula arrives at its maximum oxidation. Allow it to rest, decant, and filter. Wash it to the complete elimination of the sulfate of ammonia and of the sulfuric acid, which is ascertained by the usual reagents. Dry it in a stove at any desired temperature. The obtained product has the principal properties of gelatin and can replace the latter in its principal industrial applications, such as finishing of stuffs, coating of photographic plates, dressing of cotton threads before the weaving, preparation of medicinal capsules, &c. Heated in water it thickens and then liquefies and gives an absolutely transparent and colorless solution, becoming a gelatinous mass on cooling.

In the treatment the persulfate of ammonia may be replaced by the persulfates of soda, potash, or other persulfates, and the proportions given in the above example may be modified according to requirements. The fecula can also be replaced by the substances above referred to.

What I claim as my invention, and desire to secure by Letters Patent, is—

The herein-described process consisting in mixing amylaceous water with persulfates and water, substantially as described.

In witness whereof I have hereunto set my hand in presence of two witnesses.

LÉON CERF.

Witnesses:
GASTON JEAUNIAUX,
M. V. RACHON.

No. 769,289. PATENTED SEPT. 6, 1904.

A. P. ANDERSON.

ADHESIVE.

APPLICATION FILED JULY 11, 1902.

NO MODEL.

Fig. 1.

Fig. 2.

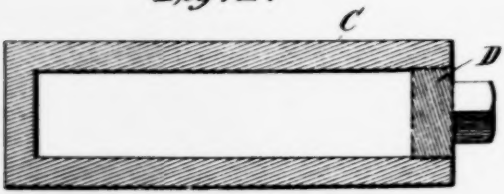

WITNESSES:
Wm. P. Doyle.
Anton A. Cazaux.

INVENTOR
Alexander P. Anderson
BY Max Fergusson
his Attorney.

No. 769,289. Patented September 6, 1904.

UNITED STATES PATENT OFFICE.

250

ALEXANDER PIERCE ANDERSON, OF BEDFORD PARK, NEW YORK.

ADHESIVE.

SPECIFICATION forming part of Letters Patent No. 769,289, dated September 6, 1904.

Application filed July 11, 1902. Serial No. 115,222. (No specimens.)

To all whom it may concern:

Be it known that I, ALEXANDER PIERCE ANDERSON, a citizen of the United States of America, residing at 629 One Hundred and Ninety-eighth street, Bedford Park, Bronx borough, in the city of New York, in the county and State of New York, have invented certain new and useful Improvements in Adhesives; and I do hereby declare the following to be a full, clear, and exact description of the invention, such as will enable others skilled in the art to which it appertains to make and use the same.

This invention relates to the art of preparing adhesives, such as pastes or sizes; and the object of the same is to simplify the manufacture of such pastes or sizes and to provide a dry adhesive which will be ready for use as a sizing or paste upon simply adding water to the same.

Pastes and sizes for laundry and other similar uses in the arts are commonly prepared by boiling flour or starch with water until the proper consistency is attained, the preparation of pastes and sizes in this way requiring considerable skill in order to obtain the same in the proper condition without lumps. Such paste is, moreover, subject to quick deterioration. It is, moreover, to be observed that paste when thus prepared must be immediately used, or at least very soon after preparation, as otherwise it will spoil or harden in part. Paste which has once hardened cannot be employed again, for the reason that it has lost its adhesive property, due to chemical and physical changes taking place within the same. These objections are overcome by an adhesive made according to my invention, for the reason that the same may be kept in a dry condition for an indefinite length of time and is at all times ready for conversion into a very effective adhesive or size upon the simple addition of water in the proper quantities.

My invention, briefly stated, consists in a dry adhesive made by subjecting substantially pure starch to heat above the boiling-point of water under pressure and thereupon suddenly reducing or removing the pressure, such dry adhesive presenting a swelled, porous, or cellular mass in which the starch granules are all broken up or disrupted substantially throughout the mass and being soluble or emulsifiable in water.

One preferred method of producing my new adhesive is as follows, reference being had to the accompanying drawings, which indicate, by way of example, two kinds of apparatus which may be employed in carrying out the process forming part of my invention.

In the drawings, Figure 1 represents a glass tube wherein my process may be carried out, while Fig. 2 represents a metal cylinder for the same purpose.

I take ordinary commercial laundry starch B in a substantially air-dry condition and place it into glass tubes A, which are hermetically sealed. These tubes are now rapidly heated to a temperature of about 200° centigrade, the heating occupying the time of from ten minutes to half an hour. The tubes are heated in an oven capable of being raised to the temperature stated or in any other well-known and suitable manner. After having been heated to the desired extent for the desired time the glass tubes are removed from the oven or other heating agent and broken open before any cooling takes place. By this procedure the starch masses are swelled up into a porous mass somewhat resembling elder-pith. On examining the swelled starch mass microscopically it will be found that the granules of the same have all been burst or broken up, so as to lose their spherocrystalline structure. The degree of temperature and the length of heating are governed to a great extent by the character of the material employed and the size of the lumps or pieces, as will be readily understood. I have found that I can obtain very good results by sealing Irish-potato starch hermetically in tubes and heating them for a period of about twenty minutes from 130° to 175° centigrade. Upon then suddenly breaking open these tubes I find that the starch will at once swell into a porous dry mass, which when placed in water forms an excellent paste which is at once ready for use. Cold or hot water may be used. When using the starch in the shape of

lumps, it will be found that these lumps retain their original shape, but are very much increased in size, occupying from two to twenty times their original volume, depending upon the amount of heat applied and the time during which the same has been applied. If the starch is treated in a powdered form, the resultant product will be in the shape of a continuous mass.

In carrying out this process with lumps or pellets of substantially pure starch the lumps or pellets will have a tendency to stick together when they are not projected so rapidly from their containing vessel that they are sufficiently spread apart. This is due to a film or coating of dextrine and probably intermediate products between the starch and the dextrine, often grouped under the name "soluble starch," which is formed on the outside of these lumps or pellets. This glutenous coating of the starch lumps or pellets thus treated and which is also formed on the continuous mass of porous starch formed under my process protects the interior of the same against the admission of moisture and keeps the same sterile, thereby preserving it indefinitely until the same is to be used.

In carrying out my process all of the varieties of commercial starches—that is to say, substantially pure starches—may be employed, such as wheat-starch, corn-starch, Irish-potato starch, sago-starch, sago-flour, and tapioca-flour and arrow-root starch.

I may avail myself of various descriptions of apparatus for producing my new dry adhesive material. Thus, for example, I may use the glass tubes hereinbefore described when carrying out my process in a small way. When carrying out my invention on a more extensive scale, I employ suitable metallic vessels in the form of air-tight cylinders C, provided with removable heads D, which are fitted on air-tight by suitable packings or otherwise. These are partly filled with the starch masses to be treated and then after having been hermetically closed by screwing on the removable heads are thrust into an oven of a temperature sufficient to raise the contents of the cylinders to the required temperature with sufficient rapidity. For example, the temperature of the oven may vary between 125° to 300° centigrade and the time during which the vessel is retained in the oven may vary from ten to forty-five minutes. The exact temperature must be determined according to the nature of the material being treated. After having thus been subjected to heat the cylinders are quickly removed from the oven and the cylinder-heads are immediately taken off, when the material will immediately swell into the enlarged, porous, and altered condition above described, this swelling being in most cases so rapid and of such an extent that the material is projected out of the cylinder.

If desired, other means for applying the gas-pressure to the starch to be treated may be employed—for example, by compressing air into the vessel containing the material during the application of heat to such vessel. In this case the hermetical sealing of the vessel is not important, provided the leakage of air is not greater than the air-compressing mechanism can meet and still maintain the desired pressure. I may also employ an apparatus such as described in United States Patent No. 20,077, of August 3, 1858, to A. S. Lyman.

When using the pure starch material in the form of small grains or lumps—such as are embodied, for example, in what is known as "pearl sago"—the resultant spongy pellets or lumps if care has been taken to prevent them from adhering to each other will prove a very suitable and convenient article of stationary, since they may be used for fastening sheets of paper together in place of the adhesive wafers or other paper-fasteners heretofore employed for this purpose. All that is necessary for this purpose is to dip such pellet or lump of dry adhesive into water or otherwise moisten it and then insert it between the corners of the two sheets of paper to be secured together and pressing the said sheets upon the interposed pellet. These pellets will keep for any length of time and are always ready for use and avoid much of the inconvenience experienced with the use of the ordinary mucilage or paste receivers hitherto employed for this purpose. These pellets or lumps may also be compressed or flattened out to form small thin disks or wafers of any shape, in which form they will be very convenient as paper-fasteners.

It is essential to my process that the starches treated are submitted to substantially dry pressure or to gas-pressure in a substantially air-dry condition while being heated and that the pressure is removed suddenly at the end of the process. Both of these features are essential to obtaining the dry porous adhesive hereinbefore described. If the starch material is in a wet condition or the pressure is not suddenly removed, entirely and radically different results will follow.

It is to be observed that while the best results are perhaps obtained under my process if the material to be treated is in an absolutely air-dry condition considerable latitude may be allowed in this respect. Thus, for example, if the starch be kiln-dried, so as to remove a portion of the liquid contained in the starch granules in the air-dried state, the process will still be operative, although not leading to so good a result and so great a swelling effect as when all the liquid is allowed to remain. On the other hand, a small amount of moisture in addition to the liquid either in the granules of the starch or in the gas pressing on the starch during the heating stage will not interfere with my process. The

fact that such latitude in both directions is allowed without departing from my invention as claimed I have expressed by stating that the starch is to be "substantially air-dry." It is also to be noted that a certain amount of moisture or vapor in the gas pressing upon the material above the amount necessary for saturation will not prevent the result above described from being obtained. However, it is preferable to work with a strictly dry gas—that is, one whose amount of water is not above the saturation-point. In employing the term "substantially dry pressure" in the claims I desire to be understood as covering a dry pressure or any pressure approximating such dry pressure so nearly as to bring about my result, though, perhaps, in a less degree. The pressure must be reduced with such suddenness as to produce the explosive effect described on the starch granules. The nearer the reduction of pressure can be brought to instantaneous the better, although there is here also a certain latitude as to the degree of suddenness with which the pressure is reduced or relieved may be allowed. In construing the term "suddenly reducing the pressure" as employed in the claims it is therefore to be understood any rapidity of reduction of pressure which will result in the explosive effect described is comprehended under said term.

In order to make pastes from starches under the old method, it is of course necessary that they should be in an extremely fine condition, so that when heated with water they become emulsified or go into suspension and become to a certain extent soluble, in which case the starch has been changed into dextrine and intermediate products between dextrine and dextrose. The dextrines have been used extensively as pastes; but the ordinary commercial dextrines are either soluble in the true sense of the term, in which they form a fluid or watery liquid which requires too long a time in drying, or when the dextrines have been insufficiently heated or treated, which is often the case, the starch granules present in such dextrines are still intact and form a thick uneven gummy mass not easily applied nor containing the maximum adhesive properties of the starches. By my method of dry treatment, &c., the granules are broken up into infinitesimally-minute particles and form with water an emulsion, &c., in which these minute starch-granule particles retain their adhesive properties on drying and are also fine enough to penetrate in between the fibers of the paper, cloth, &c., to which the adhesive is applied. Together with these minute soluble-starch particles there are also formed soluble dextrines, which also add to the adhesive qualities of air-dry paste. In fact, the treatment can be prolonged, in which case more dextrines are formed. In that case, however, the dry paste becomes colored somewhat or browned. The pure-white dry-paste stage is the most desirable.

The new starch product made under my invention is distinguished by the following characteristics: The starch granules of the same are disrupted or broken up substantially throughout its entire mass. It is cellular or spongy in structure, the cell walls or membranes of the new cellular structure thus formed being formed of the debris or remains of the original starch granules of the starch cemented together by the dextrines formed from a part of such remains in the expanding process. It is compressible and somewhat elastic and readily dissolves or emulsifies in water at ordinary temperature. As stated above, it is, moreover, coated with a smooth, continuous, and unbroken glaze of dextrine, &c., which effectively protects its interior against moisture and keeps it sterile indefinitely. It is generally white, although in the case of prolonging the heating process and forming more dextrines it will become more or less yellow or browned.

In order to use the starch as prepared under my invention for making pastes and sizes, it is simply necessary to add to it a suitable amount of cold water, in which it will readily emulsify to such an extent as to approach to and present the appearance of a solution if enough water is used. It is then ready for use. Of course, if desired, hot water may be also employed for this purpose. The dry prepared starch will keep indefinitely and is always ready for use.

In my Patent No. 707,892, dated August 26, 1902, and granted on an application pending concurrently herewith, I have described and claimed a process for treating starch materials generally by subjecting the same in an air-dry condition to heat and pressure, as above described. I do not, therefore, claim such process in this application, since the present invention is directed to the new product from substantially pure starch, as described, and the preparation of the new paste.

While I have herein described in further illustration of my invention a flattened piece of starch material having a porous cellular structure and in which the starch granules are disrupted, I do not herein claim the same specifically, since the same forms the subject-matter of my claims in application Serial No. 133,284, filed November 29, 1902.

Having thus fully described my invention, what I claim as new, and desire to secure by Letters Patent, is—

1. As a new article of manufacture, a dry spongy mass made from substantially pure starch and having substantially all of its starch granules disrupted.

2. As a new article of manufacture, a dry spongy mass made from substantially pure

starch having substantially all of its starch granules disrupted and coated with a protecting surface glaze.

3. As a new article of manufacture, a dry spongy mass made from substantially pure starch having the following characteristics: the starch granules of the same are disrupted substantially throughout its mass, the remains of the same forming the new cell-walls of the new article, it has a protecting surface glaze and readily emulsifies in water at ordinary temperatures.

4. As a new article of manufacture, a dry white spongy mass made from substantially pure starch and having the following characteristics: the starch granules of the same are disrupted substantially throughout the mass, the remains of the same forming the new cell-membranes of the new article; it has a protecting surface glaze and is readily emulsifiable in water at ordinary temperatures.

5. An adhesive fastener consisting of a dry spongy lump made from substantially pure starch, the starch granules of which are substantially all disrupted the remains of the same forming the new cell-membranes of the spongy lump, said lump being readily emulsifiable in water at ordinary temperatures.

6. An adhesive fastener consisting of a dry spongy lump made from substantially pure starch, the starch granules of which are substantially all disrupted, the remains of the same forming the new cell-membranes of the spongy lump, said lump being readily emulsifiable in water at ordinary temperatures, the said lump being coated with a protecting surface glaze.

In testimony whereof I affix my signature in presence of two witnesses.

ALEXANDER PIERCE ANDERSON.

Witnesses:
D. F. MacDougal,
F. S. Earle.

UNITED STATES PATENT OFFICE.

AUGUST FRIEDRICH JULIUS SIGMUND HAAKE AND HEINRICH ADOLF ROBERT ARTHUR HAAKE, OF HAMBURG, GERMANY.

PROCESS OF PREPARING SOLUBLE STARCH.

No. 813,647. Specification of Letters Patent Patented Feb. 27, 1906.

Application filed February 3, 1903. Serial No. 141,763.

To all whom it may concern:

Be it known that we, AUGUST FRIEDRICH JULIUS SIGMUND HAAKE and HEINRICH ADOLF ROBERT ARTHUR HAAKE, manufacturers, of 37 Eichenstrasse, in the city of Hamburg, Germany, have invented a Process of Preparing Soluble Starch; and we do hereby declare the nature of this invention and in what manner the same is to be performed to be particularly described and ascertained in and by the following statement.

This invention relates to a process of preparing soluble starch.

In order to convert ordinary starch into the soluble variety, it has hitherto been the custom to treat it with dilute acids, saline solutions, &c., and after conversion was complete it was of course necessary to let settle, decant off the clear liquor, and dry the starch, a process which is as inconvenient as it is expensive and involves a very bulky plant.

According to the process of the present invention the starch is not mixed with aqueous solutions, so that the operations of settling, decanting, and drying are altogether obviated, with a consequent considerable decrease in the working expenses, since the necessary plant is very much simplified.

This process consists, essentially, in mixing the starch with such substances as, in consequence of their great affinity for hydrogen, decompose the water contained in the starch by combining with the hydrogen and setting free the ogygen or such substances as themselves decompose on mixing with starch, whereby the oxygen contained in them is set free. In all cases the nascent oxygen oxidizes the starch, and the desired dry product suitable for the preparation of adhesives is obtained, which when dissolved in boiling water gives not a paste, but a gummy solution.

The method of carrying out the process is as follows: One hundred kilograms of starch is intimately mixed with six kilograms of hypochlorite of lime. Ordinary starch contains about twenty per cent. of water. The chlorin combines with the hydrogen contained in the water, forming hydric chlorid, and the oxygen set free effects *in statu nascendi* the oxidation of the starch particles. The action of the hypochlorite of lime may be increased by the addition of sodium bicarbonate. The proportions used are one hundred kilograms of starch, seven kilograms of calcium chlorate, and one kilogram of sodium-hydrogen carbonate. When these substances are intimately mixed, the carbon dioxid contained in the sodium bicarbonate combines with the lime of the hypochlorite of lime to form calcium carbonate. The chlorin set free by this reaction combines with the hydrogen of the combined water in the starch, which is consequently decomposed, the nascent oxygen at once oxidizing the starch. In both cases the resulting product is vendable without further treatment. Since no water is added during the process, no drying treatment is necessary, and consequently no drying plant is required in order to drive off this water. In order to prepare the product for use, it is only necessary to stir the product obtained as above described with water and then boil it.

Having now particularly described and ascertained the nature of the said invention and in what manner the same is to be performed, we declare that what we claim is—

1. The herein-described process of preparing a soluble starch consisting in mixing common starch in what is commonly termed its "dry" state in which about twenty per cent. of water is contained therein with dry hypochlorite of lime, substantially as described.

2. The herein-described process of preparing a soluble starch consisting in mixing common starch and hypochlorite of lime with sodium-hydrogen carbonate, all to be mixed in a dry condition, the dryness of the starch being that commonly referred to when the starch contains approximately about twenty per cent. of water substantially as described.

In witness whereof we have hereunto set our hands in presence of two witnesses.

AUGUST FRIEDRICH JULIUS SIGMUND HAAKE.
HEINRICH ADOLF ROBERT ARTHUR HAAKE.

Witnesses:

ALFRED JOSEPH,
JULIUS WALTER HAAKE.

[fol. 255] DEFENDANTS' EXHIBIT R

Defendants' Exhibit, Translation of Encyclopedie Roret Apparatine

It can also be noticed that pastes made with starch alter before those made with flour. White linen was thinly spread with pastes containing one-tenth alkali in order to see which attract better the humidity of the air, and no difference was noticed between those containing "economical glue" and those containing American potash.

Also the alkali, called "economical glue" may be replaced by the American potash, which presents the same advantages in every respect and which should be used in the proportion of one-tenth or one-twelfth of the weight of the starch.

10. Apparatine

According to M. H. Gerard, under this name a vegetable blue, colorless and translucid, resembling gelatin, is prepared by heating starch, flour, or other substances rich in amylaceous material, with a caustic alkali. The Best proportions are 76 parts of water, 16 of potato starch and 8 of caustic potash or calustic soda marking 25° Baume. One should stir while pouring the starch into the water; the stirring should be continued when adding the lye. After a short time, the liquor suddenly becomes clear and furnishes a thick jelly which must be beaten; the more it is beaten, the better the quality of the apparatine. It dries in the air but does not alter and remains odorless. When evaporated to dryness it solidifies, but resumes its properties when it is wet. In thin leaves it has the consisteney of horn but it is less fragile and can be bent without being broken.

This mass is very suitable for the finishing of every kind of textile, cotton, silk, wool, etc., to which it gives according to the inventor, a velvet-like appearance. It gives an almost metallic stiffness to transparent textiles and it can replace all the other materials which are used for dressing, for thickening, etc.

11. Glues from Various Starches

Vegetable glues may be prepared with the different starches found on the market. We will mention the following among them:

Arrow root which is the starch of maranta arundinacea and of maranta indica, two plants of the cane family which grow in the West Indies. It is from the root of these plants that from 8 to 20% of starch is extracted in the same manner as the starch of potatoes.

[fol. 256] The starch of cassava or manihots which comes from the tubers of the roots of the jatropha manihot, plants of the castor family, cultivated in South America, chiefly in Brazil.

Sago, a starchy substance which is prepared in the Spice Islands and in the Philippines from the pith of the sago tree, sagus Rumphii, in Guadaloupe with the marrow of the raphia farini fera, in the West Indies from cayota ureus.

Again, one could use as an adhesive substance the dextrin that is prepared from potato starch, either by slowly roasting the latter, or by letting nitric acid react cautiously on it, or by heating this starch with dilute sulphuric acid, as we described above, or finally by treating the starch with an infusion of malt. This product, which takes after these various treatments the names of: gommeline, amidulin, Aslasian gum, leicome, etc., serves for printing textiles, for sizing chains, for varnishing cardboard, flat surfaces, for making adhesive bandages, in the pharmacy, etc.

All the materials just mentioned can be used in making vegetable glue but because of their high price the glue of the flour of cereals is generally preferred.

Chapter II

Glues from Animal Materials

The glues that one prepares from animal matter have quite a different importance in the arts from those manufactured from vegetable matter, and give rise to industries much more developed and more interesting. From this standpoint, it was necessary to go into much more expensive details than we have done for these last, and it is in

order to treat as far as possible this subject with all the suitable developments that we have divided this chapter into several sections where we will take up successively the gelatinous materials, substances that furnish them, tests for commercial glues, the manufacture of glues and that of the gelatine extracted from bones. The products that are obtained from the material that we will designate and the manipulation which will be described are not only very varied but even variable in the same manufacture from causes that we will make known. But one finds also under the same commercial names quantities so essentially different that one. * * *

[fol. 257] DEFENDANTS' EXHIBIT S

Defendants' Exhibit Translation of German Patents

Gerson & Sachse in Berlin

Process for the Preparation of a Solid Vegetable Mucilage

No. 167,275, Issued January 31, 1906

The vegetable mucilage found on the market forms a gelatinous substance which may be drawn into threads, with 50 to 70% water-content; the manufacture of this material results by solution of starch in cold or hot caustic soda solution and subsequent neutralization with an acid.

The application of this vegetable mucilage (also called "vegetable glue") is made more difficult and more expensive by its contamination with the chemicals used in the preparation, by its high water-content, which causes expensive packing and freight; for drying is excluded, since on drying there is formed a horny mass which is insoluble in water.

A vegetable mucilage in the dry form has been successfully prepared, which is free from the chemicals used.

The new product is soluble in boiling water, and then forms a substance similar to gum tragacanth as well as to the so-called vegetable glue, which is very suitable for purposes of dressing.

The following facts are at the basis of the process. Dry potato starch swells in ¼ normal soda lye, and may be separated out again unchanged by ¼ normal sulphuric acid. With 1½% soda lye, the starch is partially, with 2% lye immediately, converted into a gelatinous material from which the starch granules can no longer be separated in their original form by neutralization; rather, a mucilaginous (slimy) material is obtained.

It is known that the coatings which surround the starch substance may be transformed by oxidizing agents into a condition soluble in water and alkali, on which rest various preparative methods for soluble starch. However, a great excess is always necessary for this, and—what is the main thing—it is not possible to avoid drawing some of the true starch substance into the process.

The observation was made that if the oxidizing agents act on the starch grains in a liquid which contains one per cent free alkali, the process goes entirely differently from the way it does in a neutral or a weakly acid liquid. The effect of the active oxygen, chlorine, is namely weakened, in such a way that only the coatings of the starch granules, [fol. 258] and not the starch substance, itself is oxidized. The alkali compound of starch seems thus to be more resistant than the cell- membrane towards oxidizing agents. The phenomenon appears more strikingly if the oxidation is carried out with hypochlorite instead of sodium peroxide or hydrogen pexoxide in 1% alkali solution. If the solution of a neutral hypochlorite of an alkali, which contains 1% free alkali, be allowed to act on starch, the opening of the cell membranes is slowly completed, without warning; no evolution of chlorine takes place, not even after neutralization of the reaction liquid. The product, washed and dried, becomes a milk when it is mixed with water, like raw starch, and forms in boiling water as well as in cold caustic solution a thick slime. In the process with caustic solution only traces of starch go into solution.

An essential point in the process is also that the sodium or potassium starch formed by the caustic solution be decomposed, neutralized by the addition of acid after completion of the process of opening the membrane, whereby the alkali is transformed into a salt which may be easily washed out with water, and at the same time further action of the

reagent is avoided. For it is impossible in practical technique completely and in sufficiently short time to remove the alkali-starch compound by washing with water.

The process has the following form:

1½ parts of sodium peroxide are dissolved in 100 parts of water, enough sal ammoniac is added so that only 1% of free sodium hydroxide is present, but in addition ammonium peroxide, which likewise acts as oxygen carrier, but without attacking the starch granules; 100 parts of dry starch are added to the solution, which is thoroughly mixed and the material allowed to stand for 24 hours. Then the alkali is neutralized. The neutral material is thoroughly washed with water, the starch is centrifuged and dried at a temperature from 30 to 40° Centigrade.

With the use of hydrogen peroxide, one per cent sodium hydroxide is added to the solution, and the process goes on as before.

If it is desired to work with a hypochlorite of an alkali, to 100 parts of 1% caustic soda solution are added 2½ parts hypochlorite, or so much that to 100 parts of alkali hypochlorite correspond 40 parts of sodium hydroxide and the reaction mixture contains 1% free sodium hydroxide. To 100 parts of such a liquid, are added 100 parts of dry starch, the mixture is stirred thoroughly, allowed to stand for 24 hours, then neutralized, the material is completely [fol. 259] washed out with water, and the starch centrifuged and dried at a temperature of 30 to 40° C. as before.

The product prepared according to the process described forms an intermediate member between natural starch and the socalled soluble starch, and is very essentially distinct from the products obtained with oxidizing agents in neutral or acid liquid, which no longer for a milk when stirred with water, even after 24 hours with frequent agitation. For the structure of the starch granules is changed in the latter in such a way that the starch granules on drying adhere to each other by decomposition products which are like the dextrins and even partially reduce Fehling's solution.

This is especially the case with those products which are prepared with hypochlorite alone, and whose solubility relationships amount to 50%, and which have accordingly completely lost the character of starch.

The "vegetable glue" in the dry form possesses the appearance of natural starch, has only 18-20% water-content, yields when dissolved even in the proportion 5 to 100 in water or 2% caustic solution, a thick very mucilaginous liquid which is neutral and free from ash.

The process is fundamentally different from the purification and bleaching processes for starch in alkaline water, by the use of oxidizing agents or of electrolysis, for neither soluble starch nor vegetable mucilage forms the end-product of these processes, but a more or less pure crude starch, which forms a paste with alkali and boiling water.

Claim for patent: Process for the preparation of neutral vegetable mucilage from starch in solid form, characterized as follows: starch and materials containing starch are macerated in 1% caustic soda solution, and treated with easily decomposed oxidizing agents until the material, after preceding neutralization of the caustic solution with acid, and washing out of the reagents, has become soluble in boiling water as well as in cold caustic solution.

[fol. 260] DEFENDANTS' EXHIBIT T

Defendants' Exhibit Translation of German Patent

Julius Kantorowicz and Mority Neustadt i F. Kantorowicz & Co. in Breslau

No. 88468, Issued August 27, 1896

Process for the Preparation of Opened Starch in the Dry Condition, Soluble in Water

The process under consideration has in view the formation of opened up, dry starch, soluble by boiling with water.

The end is gained thus: starch, which has been opened up in any desired way, is separated from its solution by magnesium sulphate, purified, dried, and pulverized.

The practical carrying out of the process goes for instance, as follows:

Starch of any kind and origin is opened up by treatment with potassium or sodium hydroxide solution, the alkali is neutralized, and the starch separated from the

neutral starch solution by addition of magnesium sulphate. After the salt solution is drawn off, the starch is washed with pure water until the salts are completely removed, then the precipitated starch is dried and finally ground fine.

Starch, which has been opened up chemically, for instance by the action of alkalis, could previously be prepared for industrial uses almost only in 20 to 25% solution. The preparation of stronger solutions offers very great difficulties, since the alkalis act only on great dilution with water, and the thickening of the solution by evaporation of part of the water besides the danger of a chemical change of the starch by continued boiling, yields a tough, a practically useless product. Complete drying yields an elastic, horny substance, which can not be dissolved in water even by boiling for many hours.

If the starch is precipitated, on the other hand, from alkaline or neutralized solution by magnesium sulphate, a product is obtained which is easily broken up after drying, which can be powdered without difficulty, and which shows the same chemical, but different physical properties, as raw starch.

The dried starch, separated by magnesium sulphate, is insoluble in cold water like raw starch, but is soluble in boiling water, in alkalis, in concentrated (30 to 40° Baume strong) solutions of hygroscopic salts, like zinc chloride, calcium chloride, and magnesium chloride; it shows the same intense blue coloration with iodine, and when sus- [fol. 261] pended in water, shows the same resistance to decay germs and the same lack of adhesiveness.

Since this starch, stirred with cold water for some time, filtered and dried, does not lose 1% in weight, it cannot contain dextrin, isomaltose, sugar, and so on, or it can contain them only as impurities, since these substances would go into solution.

The physical properties of this dry, opened starch are however entirely different from those of the raw starch, for instance potato starch, used for the preparation of the former.

While the latter, boiled with ten times its amount of water, gives a thick paste, the former yields with the same quantitative relationship, a non-viscous solution. The

cementitious power is according to the statement of the patentholders almost as great as that of animal glue, while the cementitious power of the ordinary potato starch is not even sufficient to stick a somewhat highly glazed paper. The yielding power also exceeds that of the crude product quite considerably.

Claim for patent: Process for the preparation of opened up starch in the dry condition, soluble in water, characterized as follows: starch, opened up in any way is separated from its solution by treatment with magnesium sulphate, and is made ready by washing, drying and pulverization.

[fol. 262] DEFENDANTS' EXHIBIT U

Defendants' Exhibit Translation of German Patent

Otto Bredt & Co. in Unterbarmen

Process for Preparing Soluble Starch by Means of Permanganate

No. 156,148, Issued November 28, 1904

The following process aims at the preparation of soluble starch which, because of its peculiar property of forming with hot water clear and strongly adhesive solutions of great durability, is to serve as a substitute not only for dextrin, but also for gelatine, glue, gum, etc. The essential part of the invention consists in subjecting starch of any kind such as potato starch, wheat starch, corn starch, etc., or substances containing starch, to the influence of an excess of permanganate: that is, in using more permanganate than is necessary for the oxidation of the impurities accompanying the starch. The permanganate may be used in neutral or in alkaline or in sulphuric acid solution.

In the Patentschrift 88447, Klasse 89, is described a process for obtaining pure starch from crude starch, which consists in heating crude starch with a permanganate solution, to get rid of the impurities (extractive material and coloring matter) and then in introducing the brown-colored starch, which is mixed with manganese dioxide, into dilute

hydrochloric acid, in order to transform into oxycellulose the cellulose membrane enveloping the particles of starch by the formation of nascent chlorine. Here, therefore, only just so much permanganate is used as is sufficient to oxidize the impurities that are present. Any excess of permanganate is anxiously avoided, since according to the method, attack by the permanganate on the starch itself is not to take place. For the same reason, the treatment with the oxidizing agent is also to occur in the cold. According to the process of patent 88,447 also, a starch insoluble in water but soluble in alkali is therefore obtained.

In contrast to this, Lintner (Zeitschrift fur angewandte Chemie, 1890, p. 546, ff.) his studied the effect of potassium permanganate in great excess and at raised temperature on starch, by which means he arrived however, not at soluble starch, but at so-called gummy acids which bear no relation to soluble starch.

The aplication of other strong oxidizing agents for the production of soluble starch has likewise been suggested at different times, as for instance in German patent 134,301 [fol. 263] where a process for making starch soluble by means of persulphate is described. The effect on starch of the various known strong oxidizing agents used technically, is however by no means similar, for the products obtained show different properties. Permanganate has the advantage over persulphate not only of greater cheapness, but also of considerably quicker effect. Moreover, while the solutions of soluble starch, prepared according to the following method by means of permanganate are very durable and remain clear and liquid for a long time, it was not possible to obtain a preparation of starch with the same properties, by oxidation with persulphate according to the directions of the description of patent 134,301. The product was almost insoluble in hot water, and after cooling, stiffened to a lumpy, solid mass which cannot be used as soluble starch in the textile industry. A fundamental prerequisite here for the usefulness of a preparation is that the cold solution also remains very fluid for a long time, in order that it penetrate into the fibre and not remain on the surface of the fibre. Under on circumstances, therefore, may a precipitation of the starch occur, through which a

stiffening of the bath would be introduced. The soluble starch made according to the following process shows these prominent characteristics in a high degree, and it is the advantage of this preparation that solutions prepared from it even if they are 20%, remain clear and liquid for days.

Otherwise than in the process of patent 88,447, the action of permanganate on the starch is directly aimed at in the following process, since it was found that permanganate in excess possesses the property or transforming ordinary starch into the form that is soluble in water, a fact which was not known to the holders of the T. R. P. 88447. In the description for the last mentioned patent, the concentration relationships of the permanganate solution used, are also not given, yet it appears to follow from the context of the description that here exceedingly dilute solutions were used, while on the other hand in the following process the concentration should in practice not be less than a certain limit. Further, in contradistinction to the patent mentioned, the action of the permanganate solution takes place advantageously at raised temperature, although the temperature where the starch used in each case begins to become pasty, say 50° Centigrade, should not be exceeded.

In the action of permanganate on starch, the following processes were observed:

[fol. 264] If starch is decomposed by an excess of aqueous or alkaline solution of a permanganate, after a certain length of time it is transformed into the form which is soluble in hot water. The temperature for this process may be chosen between ordinary temperature and a temperature near the limit where the starch becomes pasty—as a means 50° C. In the course of the chemical transformation manganese dioxide separates out, which is brought into solution after the reaction is ended, in the usual way by acids, with the addition of a reducing agent, as for instance, bisulphite, oxalic acid, formaldehyde, etc.

The process may also be modified in this way: in the beginning of the reaction sulphuric acid may be added to the suspension of starch whereby the separation of the manganese dioxide is avoided and the subsequent addition of reducing agents is made unnecessary.

Example I

100 kilograms of substance containing starch, for instance potato flour, are mixed with 130 kilograms of a 2% solution of potassium permanganate in a wooden vat lined with lead, and the suspension allowed to stand about twelve hours with frequent stirring. The temperature may best be 45° centigrade. Gradually a precipitate of manganese dioxide separates out, which is removed after completion of the reaction by acidifying the suspension with sulphuric acid and decolorizing with bisulphite solution. The starch is then freed from the acid and the manganese salts by washing with water, and dried at low temperature. With the use of greater amounts of potassium permanganate for instance, 130 kg. of a 3% solution, the reaction is completed in shorter time, while on the other hand, with the use of less permanganate that is, about 130 kg. of a 1% solution, the opening up occurs more slowly and incompletely.

Example II

100 kilograms of substance containing starch, for instance potato flour, are suspended in 130 kg. of a solution of caustic soda of an 8% sodium hydroxide, the temperature being about 30° centigrade. Then 35 kilograms of an 8% potassium permanganate solution are added to the suspension. After twelve hours, during which time the suspension should be thoroughly stirred several times, the reaction is ended. The further procedure is as given in Example 1.

[fol. 265]

Example III

100 kilograms of substance containing starch, for instance, potato flour are suspended in 130 kilograms of sulphuric acid containing 15% H_2SO_4, at best, at a temperature of 32° centigrade. Then 25 kilograms of an 8% potassium permanganate solution are added to the acid suspension of starch. The suspension, colored brownish red in the beginning, is perfectly white after two hours, when the reaction is complete. The starch is then freed from acid and from manganese salts by washing with water and is dried at a low temperature.

The proportions given in Examples I, II and III hold also for other kinds of starch. Likewise, other permanganates may also of course be used in place of potassium permanganate in equivalent amounts such as sodium permanganate, or calcium permanganate.

The soluble starch thus prepared is colored deep blue with tincture of iodine in aqueous solution, without producing a precipitate of undissolved iodine-starch. The soluble starch is free from dextrin and varieties of sugar, possesses a neutral reaction, and is not hygroscopic. Its solution penetrates easily into the textile fibres, and produces after drying a very strong elastic and shiny finish which does not disappear in moist air, as is well-known to be the case in the use of dextrin and similar substances.

In contrast to the many known processes for the preparation of soluble starch, which are based on entirely different foundations the above process possesses the great advantage that the solution of the product obtained is much more stable than other solutions of soluble starch and remains liquid after standing several days and scarcely becomes cloudy. This is of very special significance, because the solutions can thus be used up to the last residue. Stiffening of the solutions also does not occur in rubber troughs, and the cooled solution can advantageously be used for cold finish because of its great fluidity.

Claim for patent: Process for the preparation of soluble starch by means of permanganate, characterized thus: The effect (familiar in itself) of permanganate on starch containing substances of every kind, is conducted in such a way that the substances are treated at a temperature which may with advantage be slightly below the temperature of beginning pastiness of the kind of starch used in each case (about 50° centigrade) *which* more permanganate in suitable dilution than is necessary for the oxidization of the extractive material, etc., and this treatment is continued until the starch has been transformed into the soluble form.

[fol. 266] DEFENDANTS' EXHIBIT V

Defendants' Exhibit Translation of German Patent

Julius Haake and Robert Haake in Hamburg

Process for the Preparation of an Adhesive Agent and Agglutinant

No. 164,385, Issued October 21, 1905

The essentially new part of this process consists not so much in the substitution of other substances for this or the other substance formerly used for a similar purpose, nor in the use of other amounts by weight. The invention consists rather in the application of a process unknown for the purpose under consideration; in fact, of a process in which the use of water or aqueous solutions is completely excluded.

According to the previous processes it was not possible and likewise not known of, to prepare by a perfectly dry method the soluble starch used in the preparation of adhesives and agglutinants. Solutions were always worked with, with addition of great quantities of water. But since the desired product must be as dry as possible, since it is only marketable in the dry condition, large and costly drying-plants were necessary, with a not less extravagant running expense.

In the process according to patent 114,978, Klasse 22i for instance, to 10 liters of a 25 to 50% solution were added 90 liters of water. If it is now taken into consideration that it is here a question of a product which at times is prepared to quantities from 5 to 10,000 kg. we may at once judge how much water has to be removed by artificial means, and what expenses the drying-plants and the running of them cause. Since — the present process every drying-process and therefore every drying plant is omitted, the product produced according to this method may also be sold at a considerably lower price, also it may be used for purposes for which the product prepared from the old process could not be used because of its high price. A very special technical advantage is therefore also combined with the new process.

The process forming the object of this invention consists in that the ordinary commercial insoluble starch to be employed, is mixed with materials which, either because of their great affinity for hydrogen, decompose the water contained in the starch, by combining with the hydrogen and thus setting free the oxygen; or else, decompose on mixing with starch, thus setting free the oxygen combined in them. In both cases the oxygen which is set free will oxidize the [fol. 267] starch granules, and the desired soluble starch is formed.

The process is for instance carried out in this way. 100 kg. of starch are thoroughly mixed with 6 kg. of chloride of lime.

If artifically dried starch which has a moisture content of about 3.5% is mixed in small amounts with chloride of lime, then no reaction at all or only a very slight reaction occurs. The ordinary commercial starch, however, possesses a high degree of moisture, which according to Konig, Chemie der Nahrungs und Genussmittel, Berlin 1903, page 655, can be assumed on the average to be from 17 to 20%. If large quantities of such starch are mixed as thoroughly as possible with corresponding amounts of chlorine of lime, the chlorine is combined with the hydrogen contained in the water of the starch, and in fact with great evolution of heat, favored by this high heat reaction, the oxygen which is set free brings about on its formation the oxidation of the starch granules.

The action of the chloride of lime can be still further increased by the addition of sodium bicarbonate, whereby a soluble starch, not at all or only slightly hygroscopic, is obtained at the same time. The starch prepared according to the method described still contains excess of chloride of lime or else calcium chloride, which are hygroscopic. By the addition of sodium bicarbonate, this excess is transformed into chalk and salt, which are not at all or only insignificantly hygroscopic. In using sodium bicarbonate, 100 kg. of starch are mixed with 1 kg. of chloride of lime and 1 kg. of sodium bicarbonate.

The product contains no free chlorine.

If the starch is mixed with sodium peroxide, the latter combines with the water contained in the starch. A solution of hydrogen peroxide is formed, which very quickly decomposes again and gives off its oxygen to the starch.

According to the process described, therefore, a soluble starch is prepared without the addition or use of water or aqueous solutions. It is therefore a question of a perfectly dry process in contract to all previously known processes according to which water must be used in the preparation of the desired soluble starch, and this water then removed again by some means or other.

That the product obtained from the process under consideration contains besides some impurities, also insoluble starch, does not come into the question, for it is only to be used in quite definite branches of industry, in which the impurities and insoluble starch particles are without sig- [fol. 268] nificance. The prepared soluble starch is particularly used in weaving for such dressing and finishing agents as partially penetrate the fibres and partially are to furnish the fibres with a mucilaginous covering. Moreover, the product thus prepared is used with great advantage for finishing purposes in the manufacture of paper, as agglutinant for ordinary colors (earth-colors) (pigments) and other similar purposes.

For these particular purposes the soluble starch prepared from the previous wet processes could not be used because of the high cost of preparation. The starch prepared according to this dry method under consideration on the contrary, is made very cheaply, and fulfills its purpose perfectly.

Claims for Patent

1. Process for the preparation of an adhesive and agglutinant, characterized as follows: the ordinary commercial, insoluble starch, containing 17 to 20% water, is thoroughly mixed with oxidizing agents like dry chloride of lime, sodium peroxide, or something similar without addition of water; oxygen is indirectly or directly set free by these substances and the oxidization of the starch granules to soluble starch is brought about.

2. Process according to claim 1, characterized as follows: that sodium bicarbonate is added to the substances mentioned, for the purpose of preparing a soluble starch, not hygroscopic or only insignificantly so.

[fol. 269] DEFENDANTS' EXHIBIT W

Defendants' Exhibit Translation of German Patent

B. Bellmas in Berlin

Process for the Opening Up of Starch

No. 110,957, Issued April 21, 1900

The process under consideration for the opening of starch has in view the transformation of hydrolysis of the ordinary paste-forming starch into its first transformation-product, which is characterized by its solubility in boiling water as well as in cold dilute solution of an alkali. Apart from the purely chemical methods of opening which depend upon the transformation of the cellulose of the starch granule into oxycellulose by the action of oxidizing agents (alkali starch) and from those methods which depend upon dissolving the starch in boiling dilute alkalis or acids with subsequent precipitation of the dissolved starch, only the hydrolysis methods come into question for industry.

The dry hydrolysis methods, however, follow the familiar methods of dextrination and permit of no limitation of the hydrolysis to the first stage of decomposition. For the dry opened starch contains, besides the free acids used as reagents the further advanced decomposition products of starch, for instance, ordinary and reducing dextrins. By washing out the acids, of course, the dextrins also naturally go into solution, which is accompanied by great losses; also the so-called dextrination processes necessitate drying the starch twice and demand costly apparatus for the process of hydrolysis if one wishes to work with large quantities. Hydrolysis by the wet method has a much simpler form.

The known method, according to which the transformation of the starch into the soluble modification in the wet way is carried at a temperature of 40° centigrade and with the use of 7½ to 15% acid (see Zeitschrift fur Spiritus-Industrie, Jahrz XV, No. 17, page 137), demands three days' times for digestion, much starch goes into solution as dextrin as well as sugar; the large tanks, quantities of acid and losses of starch show the specialist at the first glance that such a method is inapplicable in manufacture.

The subject of this invention under consideration is the opening of the starch by hydrolysis by the wet method with the smallest quantity of acid in the shortest time with the use of as little apparatus as possible, and avoiding the formation of further decomposition products. The inventor has confirmed the fact that the starch granules can be [fol. 270] opened by the wet method by 1 to 3% acid, and inside of 12 to 24 hours if the opening up is undertaken not at a temperature of 35 to 40° Centigrade as previously, but as a temperature between 50 and 55.0° C.

At these temperature limits the cell-coatings of the starch granules are most sensitive to the action of dilute acid, but are nevertheless sufficiently resistant to maintain the structure of the starch granules, and these therefore go over even inside of a short time into the soluble modification; and in this process the hydrolysis extends only to the starch cellulose.

So, for instance, the opening occurs when the temperature is held between 50 and 55.5° C. instead of 12 to 14 hours with the use of 1½ to 2% sulphuric acid.

But the shorter time the action of the dilute acid on the starch continues, the less dextrines are formed.

The progress of the process is as follows:

To 1000 kg. of dry starch is added as much sulphuric acid (hydrochloric acid, nitric acid, etc.) as is just necessary and sufficient to change the starch into a rather thick milk.

If wet starch is used, correspondingly stronger acids are taken because of the higher water content of the starch so that 1000 kg. of starch, dried in the air, are added 16 to 25 kg. of acid. The starch milk is then brought to a temperature of 50 to 55.5° C. and kept there until the opening is completed, when the starch is stirred up, the acid washed out with water, the neutral starch centrifuged and dried.

In consideration of the losses of heat occurring by radiation in the actual manufacture, it is well to heat the material in the beginning to the highest temperature and then to take care by insulation that the temperature of the material does not fall below 50° C. It is not then necessary to heat the material further, and the process ends in 12 to 14 hours, since the average temperature is about 53° C. If on the

contrary, the material is heated in the beginning to only a little over 50° C., in spite of insulation, it is necessary to add heat continually throughout the entire process, and in spite of this, it is hardly possible with most kinds of starch, to avoid a residue of insoluble starch after 12 to 14 hours.

The completely opened and therefore soluble starch, prepared according to the process from raw starch, is soluble without residue in boiling water as well as in 2% caustic soda solution at 15° C.

[fol. 271] Claim for patent: Process for the opening of starch and materials containing starch by the wet method, characterized as follows: The starch or the materials containing starch, are exposed to the action of a 1 to 3% acid at a temperature between 50 and 55.5° until the starch is transformed into the soluble modification.

DEFENDANTS' EXHIBIT X

B. Bellmas in Berlin

Addition to Patent 110,957, April 22, 1897

Process for the Partial Opening up of Starch

No. 118,089, Issued March 1, 1901

The process given in the main patent for the opening up of starch is suitable not only for making starch soluble, but also in a less prolonged form, for making starch of any kind ready for the latter processes which are directed towards separation of the impurities.

The raw starch, for instance, obtained by the working up of potatoes, still contains constituents of the cell-liquid, partly in changed form, cell-fragments, and mineral substances. In ordinary manufacture, the purification occurs by washing and centrifuging and then drying of the starch.

In aid of the purification, mineral acids or bleaching agents have so far been applied, with washing of the starch.

One does not always, especially as to the after-products, attain the desired end, and in the corresponding way, be-

cause the work is carried out at ordinary temperature from 10 to 15° centigrade.

An entirely different purification is attained, if one works according to the process described in the main patent, but with the time decreased to 3 to 6 hours. Dilute acids, even in this length of time, act much more energetically in dissolving as well as in isolating mechanically, the coloring matters, protoplasmic substances, mineral substances, cell-fragments, than an ordinary temperature. Insofar as such substances are contained in the starch grain, they are more easily dissolved and dissolved out in life by a partial opening up of the starch grain. On the other hand, if the connection between the impurities surrounding the starch grain is broken, in particular, a sloughing off and decomposition of those impurities which have been formed only [fol. 272] in consequence of the washing process takes place. From wash-water containing iron, insoluble compounds of iron with nitrogen compounds and with other compounds are separated out under the influence of air and these cling to the starch obstinately. Calcium salts in the water act on the phosphates, making the starch impure in a similar way.

Most of these impurities form only mineral constituents of crude starch, so that it is not possible to distinguish them clearly in detail by chemical analysis. The specialist must in most cases cling to tokens and rules from experience, above all, to the white color, etc.

By removing samples, and diluting them with cold water, the specialist recognizes without anything further, from the color and stratification of the starch, whether the effect desired for the subsequent separation has been attained.

If this is the case, the starch is stirred up, diluted with water and treated in the refining vat and in the centrifuge in the familiar way, whereupon the so-purified starch is dried. It is characterized above all by a much whiter color and smaller ash-content than crude starch. The starch in consequence of the only partial opening is not soluble in boiling water, but forms a more or less fluid-paste. For this reason, starch purified in this way is more suitable for the purposes of the textile industry as well as for the manufacture of starch preparations and other purposes, than the sorts of starch purified in the usual way.

By using this purification process, a better yield of pure starch is also usually obtained, because the separation by the warm method is more thorough than was possible according to the processes used until now.

Claim for patent: The premature interruption of the process protected by patent 110,957, for the purpose of opening the starch only partially, and preparing it for purification.

[fol. 273] DEFENDANTS' EXHIBIT Y

Defendants' Exhibit, Translation of German Patents

Dr. Otto N. Witt in Westend b. Berlin and Siemens and Halske in Berlin

No. 88,447, Issued Aug. 27, 1896

Process for Obtaining Pure Starch from Crude Starch

The inventor (the first-mentioned holder of the patent, Dr. Witt) designates as raw starch the starch obtained from all kinds of plant substances by extraction in the usual way, which is known to contain and hold extractive and dyeing materials from the cell liquid that usually interfere with the further conversion and employment of the starch, because they are changed partially into colored, and partially into ill smelling decomposition products that cling to the substances made from the starch and decrease their value. Opposing the removal of these impurities, as well as several useful applications of starch, is the circumstance that the true starch-substance is enveloped in the starch grains in membranes of cellulose which render difficult direct contact of reagents with the starch itself. The process by which the starch becomes "starch-paste" may serve as an example of the effect of these cellulose-skins. In this process, the starch substance, perfectly soluble in hot water, nevertheless does not go into real solution, but is held inside the swelled cell membranes, forming the familiar paste instead of a true solution.

The inventor has found that it is possible to prepare from raw starch a substance which he designates as pure starch, and which he characterizes as follows: Not only

the above mentioned dyeing and extractive materials are removed from the pure starch, so that the starch grains show their naturally snow-white color, but the cellulose membranes are opened in such a way that they are still just able to keep the starch in its organized form, but that they at once yield to any further chemical treatment, go into solution and set free the pure starch-substance, which thus becomes easily accessible to any further chemical treatment. Such a starch is for instance very easily, smoothly and without a trace of bad odor hydrolized by mineral acids, it goes over easily into the different varieties of detrin without becoming noticeably brown; in short, it has become much more valuable than the starch from which it was made. The inventor attains this important result by transforming the cellulose membranes of the starch granules into oxycellulose, which of course offers [fol. 274] much less resistance to chemical influences than does cellulose itself. The pure starch can easily and quickly be characterized chemically by the fact that in dilute caustic potash solution it dissolves instantly to give a clear solution which may be filtered, while all known crude starches, treated with this reagent, merely swell up to a stiff jelly. The oxycellulose contained in pure starch is soluble in alkalis, while the cellulose of crude starch is merely mercerized by alkalis, and therefore envelops and holds the starch-substance dissolved in the caustic potash in a way similar to that shown above for the formation of paste by heating. From the pure starch obtained according to this process, the chemically pure starch-substance may be obtained by solution in alkali, filteration and neutralization, for which up to this time no process was known.

The above-characterized pure starch is obtained every time that crude starch is subjected to the simultaneous effect of oxidizing agents and nascent chlorine (chlorine in the formative condition), and of course with observance of such conditions that the rather resistant starch substance is itself not attacked. By the oxidizing agents, the dyeing and extractive materials are destroyed but the most important effect, the transformation of cellulose into oxycellulose is accomplished by the nascent chlorine. This effort can not be attained with molecular chlorine, nor with gase-

ous chlorine nor with chlorine water in such dilution that the starch-substance itself remains intact; but, on the other hand, it is completed smoothly by chlorine in the nascent condition.

The princip*al* here stated may be realized practically in various ways. It is, for instance, to be assemued that it comes to account in the process of Patent No. 70,012 of the firm Siemens and Halske, although this has in view only the bleaching of the starch, and not in the opening up of the starch cellulose which is above all aimed at here.

The new process combines the advantage of great cheapness with the possibility of being regulated perfectly.

According to this, the crude starch, stirred to form a milk with pure water, is treated with a solution of potassium per-manganate as long as this solution is still decolorized. Since the starch substance itself is not attacked by dilute per-manganate in the cold, the consumption of the reagent is regulated exactly according to the amount of impurities [fol. 275] present, which are thus completely destroyed. The man*a*ganese dioxide thus formed is precipitated in the starch in a state of the finest division, and it colors the starch brown. If it were merely a question of the perfect bleaching of the starch, it would further be necessary only to treat the filtered and washed, brown-colored starch with sulphurous acid, whereby the dioxide instantly goes into solution and leaves the dazzling white starch behind. But in order also to attain the opening up of the cellulose, the brown starch is introduced into a very dilute hydrochloric acid, and the cho*loc*ate-colored milk formed is kept in constant motion. The opening up of the cellulose is gradually completed by the nascent chlorine, and this process often ends before all the manganese dioxide is used up. By the removal of samples, washing these with sulphurous acid and testing them for solubility in alkali, the progress and process may be observed. As soon as complete solubility in alkali is obtained the starch is filtered off and freed from excess manganese dioxide and the molecular chlorine that has been formed by suffusion with aqueous sulphurous acid or dilute bisulphate solutions, and is then thoroughly washed out and dried. It then shows the above-mentioned canted, and dried.

Claim: The freeing of pure starch from impurities by oxidation of the latter and simultaneous opening up of the cellulose contained in the starch by its transformation into oxycellulose, in such a way that the crude starch is treated with oxidizing agents and nascent chlorine, at best with per-manganate and dilute hydrochloric acid successively.

Defendant's Exhibit Z

Defendants' Exhibit Translation of German Patent

Breuder No. 114,978—Issued November 2, 1900

Process for the Preparation of a Substitute for Glue from Starch

By the following process it is possible to prepare from starch a stuff that can be used as a substitute for animal glue. The process rests on an interaction between starch on the one hand and the solution of a hydrochlorite of an alkali on the other.

For the carrying out of a process, one proceeds as follows:

First, a 25 to 50% solution of a hypochlorite of alkali, preferably sodium or potassium, is prepared.

[fol. 276] The more easily soluble the end product is to be, the more concentrated must be the hypochlorite solution used.

Every 10 liters of this solution are diluted with 90 liters of water, and with this 100 kilograms of starch are mixed in the cold condition to a mucilaginous slime and the material left to itself for several hours. An oxidation of the starch then occurs, with warming of the mass.

The mass formed by the action of the hypochlorite on the starch settles to the bottom in time, when the liquid over it, consisting essentially of a solution of potassium or sodium chloride is decanted off, and the residue itself dried by warming to 50 to 100° centigrade.

Since starch, as it usually comes on the market, usually still contains some sulphurous acid, the latter must be neutralized by the addition of sodium peroxide, or else it must

be transformed into sulphuric acid, since the sulphite would decompose the alkali hypochlorite with formation of chlorine, which would act on the material injuriously.

The process is to be carried out so that the product shows a weak alkaline reaction after drying, and contains as admixture solely potassium chloride or sodium chloride.

The solution of the material occurs in a way similar to the solution of glue. To 100 parts by weight of water are added 20 to 50 quarts by weight of the adhesive.

If the product is to be used for dressing colored textiles, the material may advantageously be neutralized by a slight addition of acetic acid.

Claim: Process for the preparation from starch of an adhesive material comparable with animal glue, consisting in the following: the starch in the cold condition is mixed with a solution of potassium or sodium hypochlorite, after the reaction is ended, the mass is allowed to settle, is decanted and dried.

[fol. 277] DEFENDANTS' EXHIBIT AA

Glue (Oct., 1910)

Silicate of Soda

The Mineral Adhesive

The glue consumer now has the choice of adhesives from the animal, the vegetable and the mineral kingdoms. Animal glues have long been known to the commercial world. Recent scientific discoveries have placed on the market a variety of vegetable and new animal products, such as Perkin's Vegetable Glue, Casein, etc. The latest in the field is the Mineral Glue—Silicate of Soda.

Each kind of adhesive has found its specific place in commercial use. There are some purposes for which all three varieties will serve equally well. Each of the three classes of adhesives has various grades and qualities. The problem for the consumer to consider is which glue or cement will do his work best and most economically.

Silicate of soda was first manufactured commercially in the United States about the middle of the nineteenth cen-

tury. Silicate is a mild alkali, and it was discovered that it could be mixed with cold soaps, improving the appearance of the cakes and acting as a detergent component. A firm of soap makers commenced making it on a very small scale for their own use only. Silicated soaps placed on the market successfully competed both in quality and price with other brands.

The original manufacturers gradually commenced selling to other soap factories. Silicate of soda or "Water-Glass," began to find avenues of use for many commercial purposes. It was early used by tight package manufacturers for filling the pores of their wood. A special, heavy, alkaline solution, greatly concentrated, has been for years used to manufacture the best emery wheels. The paper making field was entered, a special grade of silicate precipitated with alum, forming a very valuable size.

Appreciation of the adhesive value of silicate solutions came slowly. Asbestos products found in this material a mineral cement entirely fireproof. At the present day, practically all of the asbestos products of the country are cemented together with various solutions of silicate of soda. Gradually the composite board and corrugated paper manufacturers adopted it. The reader has no doubt seen the cartons and folding boxes used as containers for cereal packages. They are square boxes holding from one dozen to six dozen packages of oatmeal, flour or any other commodity shipped in paper. The fibre and paper package is largely an article of the twentieth century. The advance in price of wood has forced the use of paper and paper-compound packages in many lines of shipping. For express age the paper packages has the great advantage of being much lighter than the wooden one.

There are many ways of making paper packages. The chemical or other bottle is wrapped in a sheet of crimped (corrugated paper) and across one side of the corrugation is pasted a plain sheet of paper. This holds the corrugation in place, and allows the sheet free on the other side to be wrapped around the glass bottle. This back sheet is pasted to the corrugation in nearly all cases with silicate of soda or casein. The large fibre containers are made either from a composite fibre board, or by gluing together several layers of paper of light board with a substantial

glue or cement. Nearly all of these products are now glued with silicate of soda. This mineral cement is not only less expensive than the animal and vegetable adhesives, but on account of its being a mineral product is practically waterproof, and is never attacked by vermin or other means of destruction.

[fol. 278] Glue

The test of a fibre package is that it must meet the requirements specified by the Interstate Commerce Commission. In the mass of paper and fibre packages which were put upon the market when this form of transportation was first introduced, it naturally resulted that there were many packages which would not stand shipment. Gradually the railroads began to refuse transportation at the usual rate for merchandise packed in such fragile containers. This meant a battle for the shipper—a battle against the railroad, and against the package manufacturers—some of them. The silicate of soda manufacturers took up the cause. In fairness to the railroad, specifications were laid down by the various classification committees of the groups of railroads east, west and south. On the other hand in fairness to the shipper and to the honest manufacturer no discrimination was made against adhesives. The test was to be in the strength of the package.

A strong package can be made by using animal glue, but animal glue costs too much for a package that is to compete with a wooden box. A passable container could be made from paper, sealing only the edges of the flaps, but a safe container, so the railroads say, must be sealed over the entire area of all the flaps. It is in this application that silicate of soda has won its place. A package with silicate of soda is more than glued together, it is cemented together. Board made with this mineral adhesive and sealed with it makes a package entirely up to the railroad requirements. Such a package is much less expensive than one sealed with animal or vegetable glue.

Silicate of soda is cheaper than animal glue, but this is not its greatest advantage. Silicate of soda requires no heating.

Will this mineral adhesive do for all kinds of gluing work? "They may use it for paper, but it won't do on

wood," says the panel manufacturer incredulously. In reply we must say there is no question but that silicate of soda will work entirely satisfactory on many kinds of wooden veneer. Each case must however, be determined for itself. Conditions of wood texture, manner of manipulation, etc., etc., must always determine what kind of adhesive will give the best work, and what kind is the most economical in each particular case. Whether it be in using animal, vegetable or mineral glue, the consumer cannot be sure that he is getting the most for his money without studying carefully each of his conditions, and adapting his work to fit.

Silicate of soda has many important traits in common with animal glue. It can be produced in various consistencies—thick flowing or thin flowing. These variations can be obtained in different ways. Special grades are made which in their measure show the phenomenon of producing a jell. Silicate differs from animal glue in that it sets differently: when it is once thoroughly dry the joint is practically insoluble. Whether it should be mixed with any other material depends altogether upon the conditions to be met. The drying time can be altered in different ways.

Silicate of soda has thoroughly established itself in the adhesive field. Its progress has been so rapid that the manufacturers do not feel that they have yet determined all the purposes to which it can be adapted. Any adhesive consumer should bear the new mineral adhesive in mind. It would certainly cost him less than either the animal or vegetable glue. Whether it will do his work satisfactorily, both the silicate of soda manufacturer and Glue will be glad to help him determine.

Glue (Nov. 1910)

[fol. 279] joint coming apart than either a weakening of the glue or gross carelessness and neither of these should be tolerated. If any gluejoints come apart, investigate at once; in 99 cases case out of a hundred the glue has not been handled right, and the unfailing remedy will be: more care and better system for the gluehandling. Such improvements always pay handsomely, it means stronger glue

work and smaller glue bills in each case—and the yearly savings are always several times as large as any and all possible outlays.

7. Better Times Coming

When we see that the glueconsumer begins to look for information and is willing to relinquish the untenable position he assumes when he claims for himself the right to be the final and infallible judge of glues and glue values we have then a sure sign of better times ahead. By drawing upon the glueknoweldge gathered up by the gluemen and combining with it the practical experience of the glue consumer the art of gluemaking and gluehandling will be developed along natural lines and the results will be valuable improvements, more knowledge, better products—and above all better gluework.

The Furniture Manufacturers' Association took a step in the right direction, when they appealed to the glueman for advice on glue—and we hope other similar bodies will follow the good example.

Glue Talk

Solving Factory Problems

The Best Glue Tests—What are They?

A large glueuser sends us this inquiry—but does not give any details as to what kind of gluework he produces, nor what kind of glue quality he wants to gauge, and for that reason we can not give him as specific advice as we should like to.

For Veneering Purposes—and his letterhead indicates such production—we can use either an animal or a vegetable —or a mineral adhesive—and the testing would first of all depend upon the kind of adhesive used or under investigation.

For Animal Glue the most important test will be the viscosity test. That test should be made in such a manner that the test-figures disclose the practical water-taking capacity,

stating how glue and water should be mixed in order to make up the right glueliquid for veneering purposes. This test is not done by the use of a hydrometer, or any kind of floating glass instrument, no matter what name such instrument may have. A viscosity test is made by letter liquid run through a special instrument having an aperture in the bottom. This instrument should be constructed for the gauging of such glueliquors as are used in factories; an instrument for the gauging of oil or thin glueliquors will not give the results wanted.

About water-taking capacity in glue and such testing, details are given in our book "Glue Handling I," where also is shown an apparatus for such testing.

Proper Percentage of Dry Glue to Use for Veneering?

Our correspondent puts up this question adding that he uses "a standard make of glue costing 11 cts." the percentage to be determined by the Weinhagen glue hydrometer.

Glue

As it is impossible for us to know what gluegrade our [fol. 280] correspondent may buy for 11 cts. we can not give the specific information desired. If our friend had stated the grade of the glue he used it would have been different, we could then have stated a percentage which ought to produce satisfactory results.

Accounting for Evaporation

Whenever such inquiries are made it should at the same-time be described in which appliance the percentage of the gluesolution is intended to be gauged, whether in the gluecooker or in the gluespreader; this for the reason that a great deal of water is evaporated in the gluecooker. This evaporation changes the percentage to a considerable extent before the glue comes to the gluespreader, depending upon the construction of the gluecooker. In many cases this evaporation takes out so much water that if the glue goes into the cooker with three parts of water to one part of glue, it comes to the spreader with two parts of water to one of glue; or talking percentage of solution, the 25

per cent. gluesolution in the glueco ker has been evaporated or boiled down, or condensed to a 33 1-3 per cent. solution in the gluespreader.

We use these figures with purpose, because there are many glueconsumers who fondly believe they are using 3 parts of wate to 1 part of glue; which proportions may in many cases actually be there when glue and water are mixed in the cooker, but before the glue reaches the gluespreader there is a good deal of water lost and the glueliquor applied is always of a higher percentage than the glueliquor originally put in the cooker.

Description of Glue Tanks is therefore required if it is desired to get specific advice on the preparation of glueliquors.

Better Glue Handling Beats Better Glue Buy 2 to 1

One of our correspondents brings up for discussion the relative importance with regard to reduction in cost of using glue, obtainable on the one hand by improvements in methods, system and appliances for the practical handling of the glue and on the other hand by judicious award of contract when buying glue.

The answer can be given in this case decisively, and in few words; there is no case or no factory where the management can not gain twice as much by improving methods and appliances as they can possibly gain by any saving on the glue purchase. It is not necessary for the glueuser to change gluegrade, brand or make, in order to get better gluework at lower cost, but it is necessary to change methods, and usually it pays also to get better appliances.

The Amount of the Saving

is as a rule a good sized one; we have often seen it run above 30 per cent. of the gluebills. In any case the saving will in one year amount to more than any and all possible outlays.

Better Glue Work as Additional Bonus

makes the improvements of still more value, as the whole production in that way gains in quality. In many cases

this gain in quality is worth more than the reduction in the glue bills, because it raises the value of the goods made and safeguards the reputation of the house.

Some Reasons for This Fact

It is chiefly the damage done by heat and water while the glue is prepared and kept warm before used up, which if prevented, will make the glue give stronger work and more work. As long as the glue has an excess of strength —and all fair glue has—the glueuser is not aware of his loss, hence his unconcern.

What this heat damage amounts to is described in some detail in Glue Handling I, page 85, where it is told how 8 hours' heat reduces glue 3 cents in value. In another case Mr. Reardon of St. Louis determined

[fol. 281] Glue (Dec. 1910)

Paper Box Adhesives

Two kinds or classes of these—either the animal glues or the vegetable adhesives—with preferences for the one or the other class according to the kind of work to be done, or the machinery—or the notion of the one who determines what kind of adhesive shall be used.

In favor of the animal glue is the strength—the quick setting—and the comparatively small amount of water present in the glue liquid. Where gloss or the finish of a good covering paper has to be preserved, there the animal glue has preference—because the pastes, and some gums, have so much water in them that the gloss is impaired. The drawbacks of the animal glue are: the higher prices, as compared to starches or gums, and the necessity for heating the glue liquids. Look at the covering machines and the devices for the handling and the melting of the animal glue in any paper box factory, and the difficulties and expenses caused by the necessity of keeping animal glue warm are at once recognized.

The vegetable adhesives have as a rule this advantage over the animal glue—they are applied cold—or it is at least not necessary to have a heated container on the covering machine. In addition there is the lower cost of these

adhesives made from gums or soluble starches. The problem for the vegetable adhesives is mainly the solubility—how to bring the starch or the flour into a real liquid form—and without using too much water, at least for some kinds of work. The easiest way is perhaps to convert the starch into dextrine, but this requires a good deal of equipment, making it impracticable for the average consumer. The use of caustic soda or similar strong chemicals would not yield a neutral adhesive and the free alkali—or acid would play havoc with all tinted papers.

Some chemical—or physical—process, strong enough to subdue the starches and flours and make them reasonably soluble in not more than 4 parts of water would be of great importance to the paper box makers. The new liquefying process about which we have all the details in this month's number is a step in this direction and should therefore be studied carefully by all paper box makers.

The Strength of Vegetable Adhesives

It is absolutely certain that most of our starches and flours have enough strength in them to meet all the requirements of paper box work.

It is therefore not a question of strength—but of preparing processes and details in connection therewith.

Another advantage accruing from the use of vegetable adhesives is that the dry film from a vegetable adhesive bonding the paper to the board is less affected by heat or moisture than a corresponding film of animal glue. Investigations made of paper sized with starch solution many hundred years ago show these papers to be nearly unimpaired in strength after centuries of existence—and a better testimony in favor of such vegetable adhesives could not be asked for.

Mineral Adhesives

For the building of chipboard various kinds of silicate of soda have been used with signal success. This is a hint to the paper box maker; the making of chipboard means the bringing together of several layers of paper—box lining is nothing else.

Silicate of soda has much less water in it than is used with other adhesives; the various grades are produced with considerable latitude in setting, and the price of this new adhesive is very attractive. And silicate of soda is also applied cold.

Adhesive Compounds

Mixtures of paste and animal glue have always been used in book binderies and by paper workers; animal glue and gums or dextrines are also known to the trade.

(Continued in next number.)

[fol. 282]

Glue (Dec. 1910)

Silicate of Soda

Progress in the Veneer Shook Trade

The article on Silicate of Soda in the October issue last, gave a general survey of various uses of this new mineral adhesive—Silicate of Soda. Each of these fields deserves careful and extended study, for, just as in using animal glue, each has its own peculiar requirements as to method of application, consistency of adhesive solution, etc., which will be required to give most economical and satisfactory results.

It has now been several years since Silicate of Soda first entered the lighter adhesive work, corrugated board, composite paper board and asbestos products manufacturers. In each of these lines of work it is now almost exclusively used, their requirements being comparatively simple. For wood joints Silicate of Soda has been most carefully studied in connection with the veneering trade, especially the cheap soft wood veneer shooks. During the last year several leading manufacturers have been using large quantities. The first runs were made during the winter time, and no difficulty was experienced in getting a joint that would pass the saws very satisfactorily. As warm weather came on, however, some of the southern mills found that the panels came through in somewhat irregular condition, and there was more or less "scrapping." After a considerable

amount of experimenting, both by consumers and manufacturers, it was found that by cooling the Silicate the satisfactory conditions could be reproduced. It appeared that the warmer weather had thinned the solution, so that there was not sufficient adhesive on the surface of the joint.

The great point in making any silicated joint, and especially in woodwork, is to get the panel under pressure as quickly as possible after the application of the adhesive. The ordinary Silicate adhesive solution does not allow more than 15 minutes before pressing. If the joint is exposed to the air longer than this, the evaporation forms thin films over the surfaces of the adhesive like minute panes of glass; between these of course there can never be any bond. In some cases this will limit the number of panels which can be placed in one form. Where the panels are small, 70 centres, and of large panels, 50 centres (three ply) can usually be manipulated within the 15 minute limit. After pressure is applied, the form should not be disturbed until set. Duration of pressure will depend upon the character of the stock, etc., but it is usual to keep shook panel forms in retainer as long as over night. Bolted pressure plates are used to advantage, but it is necessary to be very careful that the bolts are fastened evenly. Uneven pressure may spoil a whole form.

Points on Manipulating Silicate of Soda for Veneer Joints

In the use of the new mineral adhesive—Silicate of Soda—most of the victory rests with the factory mechanics. Almost any ordinary roll machine, used for spreading animal or vegetable glue, will work satisfactorily with Silicate of Soda. It is essential, however, that in using these machines they should be carefully and frequently washed. It is best to wash with live steam at noon as well as at night. Those who have disregarded this caution, and have allowed their machines to become clogged with dry Silicate, know that it is almost impossible to remove this material without using the chisel. It is easy to run a machine continuously, and if it is so run, and carefully washed, there is little danger of the adhesive congealing.

(Continued on page 20)

be very small, say one tenth of one per cent., which means for a dose of 100 lbs., of dry glue about 2 ounces of alum. The manner of application would be to add the alum to the water in which the glue is soaked, and in that way let the glue gradually absorb this thin alum solution.

It must however be stated that this is a rather dangerous experiment because, if alum is added over and above a certain point, it makes the glue insoluble.

By a combination of the measures here indicated it should be possible to overcome ordinary changes in atmospheric conditions and counteract the influence of these changes on the setting of glue or glue liquids, as used for the manufacture of paper boxes.

The Functions of Adhesives in Textile Fabrics

Generally speaking the purpose of the adhesive or the sizing is to give more body, smoother finish and increased strength to yarn and fabric, and for these purposes the manufacturers and the finishers use either animal glues or vegetable adhesives. The advantage in using the animal glue or the gelatine is the superior strength and sizing capacity, while the vegetable adhesives offer greater liquidity, and liquidity is a very important item, because the more liquid the size the better the penetration, and the more perfect the incorporation of the sizing agent into the yarn or the fabric.

The specialist in adhesives has long ago recognized the importance of liquidity in the adhesive, and that is one of the reasons for the numerous attempts to produce a liquid animal glue, of which there are now several brands in the market. Says one circular, which describes a special kind of liquid animal glue: "For the finishing of woolen and silks it is far superior to ordinary glue, because it penetrates better and so gives a fuller hand."

The only serious drawback to yarn sized with animal glue was that this sizing would disappear if the fabric came in contact with warm water. But by treating the fabric to a vapor bath of formaldehyde the animal glue is made insoluble in water. That means the preservation of the strength and the finish imparted by the animal glue.

This new combination of perfect liquidity in animal glue or size and while such size is in a cold state, that is at ordinary workroom temperature, or between 65° and 75° F. and the possibility of waterproofing the size—this should be of considerable importance to the manufacturers of textiles.

Gold and Silver Cloth by New Method

In connection with the approaching coronation ceremonies there has been a considerable impetus experienced in the textile industries, producing fabrics into which are woven threads of gold and silver. U. S. consul, Mr. A. E. Ingram, of Bradford, England, has made a special report on this subject, part of which we reprint from "Daily Consular and Trade Reports," No. 131 for 1911.

"Tinsel, gold and silver yarns have been in great demand for coronation purposes, and a local journal recently reported a development in the method of their manufacture. The common method consists in mechanically twisting a metallic filament around the spun yarn. To obtain a regular result is difficult, and the percentage of waste is very high. Moreover, the filament is easily detached from the thread. So far it is the old method. But now comes the new process, which deals with an adhesive and the application of an adhesive for the purpose of applying the metal to the yarn. It is a Paris firm which has invented a process which may revolutionize the industry. The yarn is first impregnated with a solution of acetylated cellulose, specially prepared. While yet damp the threads are passed through finely powdered metal, which seems to be of the type known

[fol. 284] Glue (May 1911)

(3) China Clay.—This is the well-known mineral, and for paper coating good qualities are used. Cleanness and good color are essential.

Sizing material used: (1) Glue.—The largest proportion of the paper coated in Britain is sized with glue, and for this purpose a good quality hide glue is essential. Special qualities are made for paper coating, and at least 95 per cent. is Continental.

(2) Casein.—This sizing material is a milk product obtained by precipitating separated milk with acid, washing, purifying and drying and grinding. A great deal more has been written about casein than on glue or any other adhesive substance, but the subject still presents difficulties with reference to the preparation of solutions and mixtures with other bodies, especially coloring matters. Casein was introduced as a size for paper coating in Britain in the year 1897, and made very little progress at first, as the method of making a solution was different from that employed with glue which up to that time had been exclusively used for paper coating. However, the great economy effected lead some of the more enterprising paper coaters to take the matter up and solve the difficulties connected with its application with very satisfactory results. Casein is characterized by giving a very brilliant finish and satin white, and as the coat can be rendered easily absolutely insoluble by the use of formaline, it is particularly suitable for box enamels and similar classes of paper. It also gives good results for process block printing in black and colors. On the Continent and in America casein is used to a much larger extent than in Britain, and is undoubtedly unsurpassed for special classes of paper for decorative purposes. For some years the price of casein ranged from £20 to £25 per ton, but the price gradually began to rise owing to the use of the product in other industries and a general recognition that, as milk product, it had a higher value if turned into cheese. In 1908 it had risen to over £30 per ton, while today its value is fully £40 per ton. At this price its use for paper coating is limited to the special class of paper for which it is peculiarly suitable.

(3) Starch Products.—The fact that weight for weight, starch has an equal, if not greater, sizing value than gelatine, suggested its use in paper coating, and many attempts have been made from time to time to substitute a starch product for glue. The problem was to get a starch product which would yield a sufficient fluid solution to make down the color to a cream and still retain the sizing power of the starch. Ordinary soluble starch was tried in conjunction with gelatine, but many troubles were experienced, and it is questionable whether the economy is very real. At any rate, the use of soluble starch in this way is strictly

limited. Soluble starch, with 5 per cent. borax, gives a solution which can be used for paper coating, but its sizing value is low.

It is recognized that unless a solution of the sizing material dries to a continuous film on glass, it is not suitable for paper coating. If it dries to a brittle mass, as is the case with ordinary soluble starch alone, or with borax, it will not give a continuous surface on the paper. The broken surface will lead to considerable trouble in finishing, and will be absolutely fatal to the attainment of first-class printing results. This has been my own experience, and is confirmed by the few firms who have experimented to any extent with soluble starch.

It is, however, possible to obtain a starch product capable of yielding a continuous film on glass and paper. And in 1900 a French soluble starch was introduced which fulfilled these conditions. This was manufactured by Breauder's process (see English Patent 17650, August 16, 1898, C. Breauder), and is an oxidized starch produced by the action of alkaline hypochlorites. Preliminary experiments gave encouraging results, but subsequent tests on a manufacturing scale were not so successful with the

PLAINTIFF'S EXHIBIT 23.

285=286

F. G. PERKINS, DEC'D.
G. S. PERKINS, EXECUTRIX
GLUE KETTLE.
APPLICATION FILED MAR

1.109,144.

Patented Sept. 1, 1914.

3 SHEETS—SHEET 1.

Fig 1

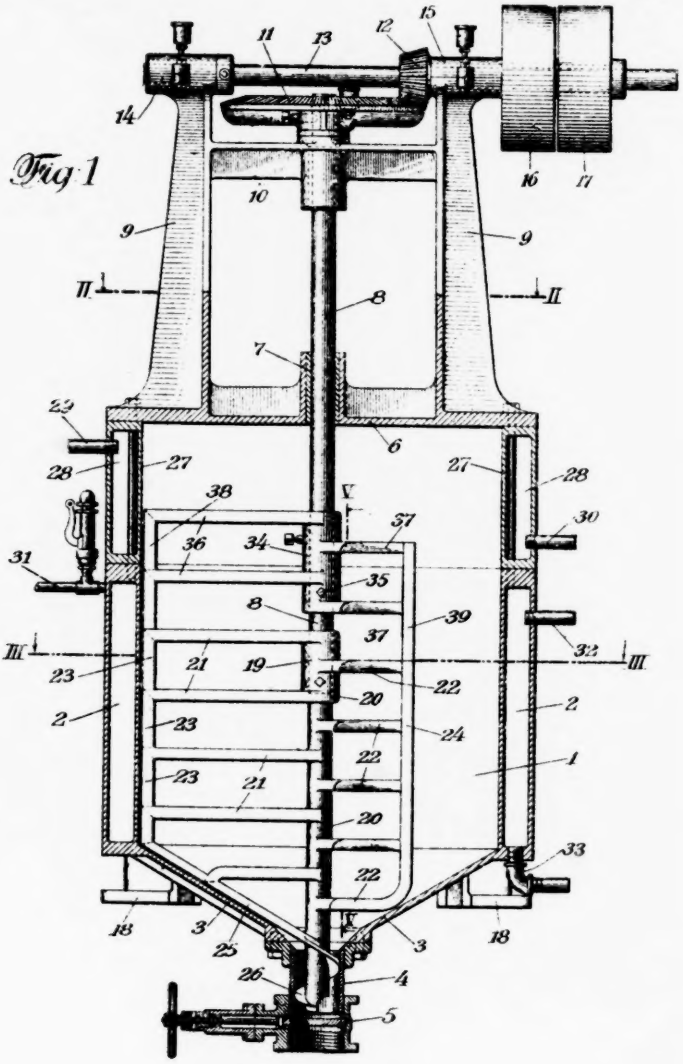

287=288

F. G. PERKINS, DEC'D.
G. S. PERKINS, EXECUTRIX.
GLUE KETTLE.
APPLICATION FILED MAR. 4, 1911.

1,109,144.

Patented Sept. 1, 1914.
3 SHEETS-SHEET 2.

Fig. 2.

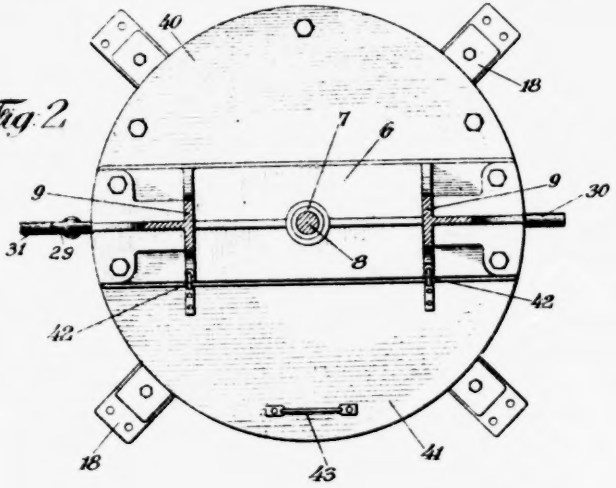

Fig. 3.

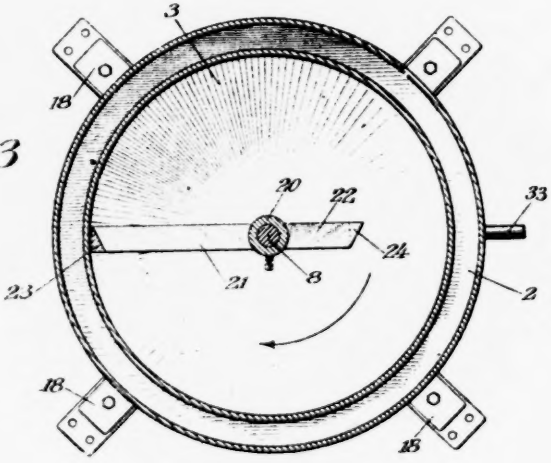

F. G. PERKINS, DEC'D.
G. S. PERKINS, EXECUTRIX.
GLUE KETTLE.
APPLICATION FILED MAR. 4, 1911.

289

1,109,144.

Patented Sept. 1, 1914.

3 SHEETS—SHEET 3.

Fig. 4

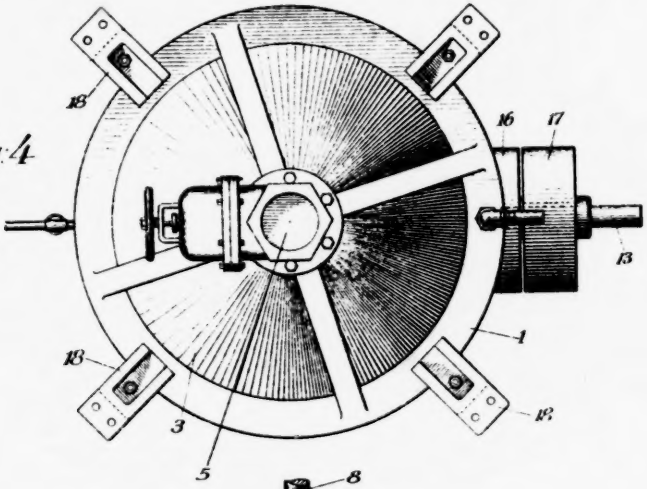

Fig. 5

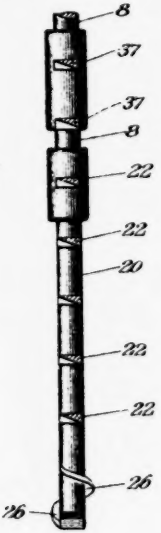

UNITED STATES PATENT OFFICE.

FRANK G. PERKINS, DECEASED, LATE OF LANSDALE, PENNSYLVANIA, BY GERTRUDE S. PERKINS, EXECUTRIX, OF LANSDALE, PENNSYLVANIA, ASSIGNOR TO PERKINS GLUE CO., A CORPORATION OF PENNSYLVANIA.

GLUE-KETTLE.

1,109,144. Specification of Letters Patent. Patented Sept. 1, 1914.

Application filed March 4, 1911. Serial No. 612,181.

To all whom it may concern:

Be it known that FRANK G. PERKINS, deceased, late of Lansdale, borough of Lansdale, State of Pennsylvania, did invent certain new and useful Improvements in Glue-Kettles, of which the following is a specification.

The invention relates to improvements in glue kettles or glue mixing apparatus and various objects of the invention are to provide an apparatus of this class which is especially simple and easy of construction and efficient and economical in operation and manufacture, and also which is especially applicable to manufacture or treatment of glue made from a vegetable base.

Further objects, features and advantages will more clearly appear from the detailed description given below taken in connection with the accompanying drawings which form a part of this specification.

In the drawings Figure 1 is a vertical section through the apparatus. Fig. 2 is a top view partly in section on the line II—II of Fig. 1. Fig. 3 is a transverse section on the line III of Fig. 1. Fig. 4 is a bottom view of the apparatus, and Fig. 5 is a detail section taken on the line V—V of Fig. 1.

Referring to the drawings, 1 represents a main container provided with a steam jacket 2 cylindrically arranged about its sides. The bottom 3 of the container inclines downwardly toward the center where it is provided with a glue outlet 4. At or below the outlet 4 there is a gate valve 5 for admitting or shutting off the supply of glue to below from the container. Bolted to the upper part of the container is a cast iron top 6 having a bearing 7 in which a vertical shaft 8 is journaled. The top 6 has two upright members 9 integral therewith which carry an upper bearing 10 for the shaft 8. Secured to the upper end of the shaft 8 is a beveled pinion 11 which meshes with a beveled pinion 12 secured to a shaft 13 journaled in bearings 14 and 15 on the uprights 9. On the shaft 13 are fast and loose pulleys 16 and 17 so that the shafts 13 and 8 may be driven from any suitable source of power. The apparatus is supported by lugs 18 integral with the main container, which lugs may be bolted to the floor and the outlet 4 and part of the bottom 3 extend down through the floor to the room below to which glue is supplied from the apparatus.

Secured to the lower end of the shaft 8 at 19 is a stirrer 20. For this purpose the stirrer 20 is enlarged at 19 and is provided with a cylindrical opening into which the shaft 8 extends as shown by dotted lines. A set screw may be used to firmly secure the shaft to the stirrer. The stirrer 20 is made of one integral casting having integral radial arms 21 extending horizontally in one direction substantially to the inside wall of the container. The stirrer also has integral radial arms 22 extending horizontally in the opposite direction and in the same vertical plane as the arms 21. The arms 21 carry at their outer ends an integral upright or vertical member 23. The arms 22 only extend about half way from the center of the stirrer to the inside wall of the container and carry at their outer ends an integral vertical or upright member 24 which travels in a circular path between the axis of the stirrer and the path taken by the upright member 23. A slight space is provided between the upright member 23 and the inside wall of the container.

The underneath or lower surfaces of the arms 22 are beveled off or inclined as shown in Figs. 1 and 5, in a direction to tend to force the glue downwardly. The arms 21 are also beveled off or inclined on their lower sides in the same manner and in a direction to force the glue downwardly. The upright member 23 is beveled off or inclined on its inner side as shown in Fig. 3, in a direction to force the glue or mixture inwardly. The upright member 24 is beveled off or inclined on its outer side, as shown in Fig. 3, in a direction to force the glue mixture outwardly. Integral with the stirrer 20 is an arm 25 which is inclined so as to be parallel with the bottom of the container and which runs near to the bottom of the container. Also integral with the stirrer 20 is a screw 26 at or in the outlet 4 which when the stirrer revolves acts as means to force the glue through the outlet when the valve 5 is open.

In order to accommodate different sized batches and different spaces into which the apparatus may be put the apparatus is made extensible or adjustable. For this purpose

an extension 27 of the container is provided which also has a steam jacket 28 so that the container is formed of a plurality of cylindrical sections superposed upon one another. Steam pipes 29 and 30 lead into the jacket 28 and pipes 31 and 32 into the jacket 2. A pipe 33 also leads into the jacket 2 for drawing off water, etc. The stirrer is also provided with an extension 34 secured to the shaft 8 as by screw 35. The stirrer extension 34 is provided with radial arms 36 and 37 like the arms 21 and 22, respectively, in every particular, and also with upright members 38 and 39 like the upright members 23 and 24, respectively. It will thus be seen that the size of the apparatus may be adjusted to suit requirements.

On one side of the top piece 6 the container is covered by a plate 40 bolted to the container. On the other side of the top piece 6 the container is provided with a cover 41 hinged to the part 6 at 42 and provided with a handle 43 for lifting the cover to admit of the glue materials being placed in the container.

The glue or glue materials are placed in the apparatus and the stirrer set in motion to thoroughly mix the same and stir the glue. The steam jackets will serve to keep the bath at the proper temperature if necessary. After being fully treated the gate valve 5 may be opened and the screw 26 will readily force the glue through the glue outlet to the room below. The particular arrangement of stirrer shown is found especially advantageous in the preparation of vegetable glue or glue made from a vegetable base and the particular beveling of the stirrer members is found advantageous in this regard. The inclination of the bottom toward the outlet makes more easy the withdrawal of the batch and the member 25 aids in this respect.

The particular glue for which this apparatus is especially adapted is the vegetable glue described in U. S. Letters Patent No. 1,020,656 and Reissue Letters Patent No. 13,436. The glue there described is a colloid of great viscosity formed by dissolving starch flour in water and caustic soda, and it apparently contains besides a large proportion of hydrosols an enormous number of nuclei, and owing to its unusually high concentration (about 30%) it is prone to gelatinize. The causes for requiring a specially adapted mixing kettle and the functions of its parts appear to be as follows: As soon as hydrogel particles begin to form a minute weblike structure is created with walls perhaps entirely invisible under a microscope, and as the starch molecule is relatively large, this structure is extensive and will long remain like a fluid. Under the influence of surface tension these sheets of weblike structure roll up into hollow cylinders etc. and there results a segregation of hydrous hydrogel groups from the remaining hydrosols. In this manner ropy, viscid masses and lumpy gelatinous aggregations are prone to form throughout the glue mass and also to grow and harden by further segregation and addition to the wall structure. When this occurs in this vegetable glue such aggregations collect more or less on the sides and bottom of the container and if allowed to remain for any length of time attach themselves thereto strongly. It is not sufficient to remove these aggregations bodily but they must be desegregated by breaking down the invisible dividing walls and tearing up the ropy structure.

In the apparatus shown and described, the upright members 23 and 28 and bottom scraper 25 running close to the walls of the container, not only serve to prevent the gelatinous aggregates from collecting, growing and attaching themselves to the side and bottom of the container, but also act to desegregate any such masses as may be formed. The intermediate stirring members 21 and 22 act to desegregate or prevent segregation in the body of the glue mass by tearing through the segregation walls, liberating the contents of the segregation cylinders, etc. and disintegrating and distributing the fragmentary parts of these walls.

The screw blade 26 operating in the glue outlet acts to stir and desegregate the glue in the outlet when the valve 5 is closed, and this screw blade 26 is of such size and shape that it will not pack any solid material (as the starch flour suspended in water) in the outlet when the outlet is closed, but upon opening the valve 5 the blade 26 acts to force the glue through the outlet.

Although the improvements have been described in great detail it is not desired that the invention in its broadest aspects be limited to such details except as clearly pointed out in the appended claims, since many changes and modifications may well be made without departure from the spirit and scope of the invention in its broadest aspects.

Having thus fully and clearly described the invention what is claimed and desired to be secured by Letters Patent, is:

1. A glue kettle comprising a main container having a heating jacket about its sides and an outlet from its bottom, the bottom inclining downwardly toward said outlet, a valve in said outlet, a stirrer in the container, said stirrer having radial arms extending in opposite directions in substantially the same plane, the arms extending in one direction nearly to the inside wall of the container and carrying an upright mem-

ber which runs near the inside wall of the container; and the arms extending in the opposite direction being shorter than said first mentioned arms and carrying an upright member which runs intermediate the center of the kettle and the path of said first mentioned upright member, said arms being beveled on their underneath sides in a direction to force the glue downwardly, said first mentioned upright member being beveled on its inner side in a direction to force the glue inwardly, said second mentioned upright member being beveled on its outer side in a direction to force the glue outwardly, a screw carried by said stirrer for forcing the glue out through said outlet, and means for operating said stirrer.

2. A glue kettle comprising a main container having an outlet from its bottom, a stirrer in the container, said stirrer having radial arms extending in opposite directions in substantially the same plane, the arms extending in one direction nearly to the inside wall of the container and carrying an upright member which runs near the inside wall of the container, and the arms extending in the opposite direction being shorter than said first mentioned arms and carrying an upright member which runs intermediate the center of the kettle and the path of said first mentioned upright member, said arms being beveled on their underneath sides in a direction to force the glue downwardly, said first mentioned upright member being beveled on its inner side in a direction to force the glue inwardly, said second mentioned upright member being beveled on its outer side in a direction to force the glue outwardly, a screw carried by said stirrer for forcing the glue out through said outlet, means for operating said stirrer, and a stirrer forming an extension to said first mentioned stirrer and having similar radial arms and upright members.

3. A glue kettle comprising a container having an outlet in its bottom for the glue, means for forcing the glue through said outlet, a stirrer in the container carrying an upright member which runs near the inside wall of the container and also carrying an upright member which runs intermediate the center of the kettle and the path of said first mentioned upright member said first mentioned upright member being beveled on its inner side in a direction to force the glue inwardly and said second mentioned upright member being beveled on its outer side in a direction to force the glue outwardly to more effectively stir the glue, said means for forcing the glue through said outlet comprising a screw integral with said stirrer.

In testimony whereof, I have signed my name to this specification in the presence of two subscribing witnesses.

GERTRUDE S. PERKINS,
Executrix of the estate of Frank G. Perkins, deceased.

Witnesses:
R. C. WENDT,
L. MCMILLEN.

Copies of this patent may be obtained for five cents each, by addressing the "Commissioner of Patents, Washington, D. C."

PLAINTIFF'S EXHIBIT No. 24.

293

F. G. PERKINS, DEC'D.
G. S. PERKINS, EXECUTRIX.
GLUE SPREADER.
APPLICATION FILED MAR. 13, 1911.

1,238,810.

Patented Sept. 4, 1917.
5 SHEETS—SHEET 1.

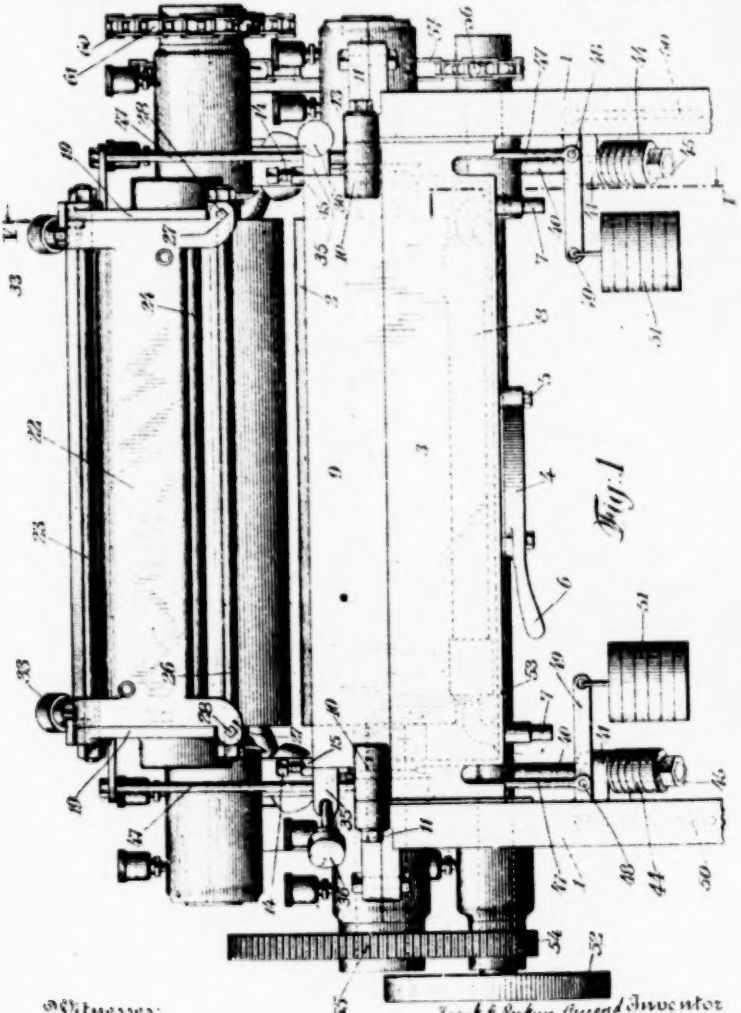

Witnesses:
John O. Gempler
Geo. M. Lang

Frank G. Perkins Deceased Inventor
by Gertrude S. Perkins Executrix
By Attorneys
Kenyon & Kenyon

318

294

F. G. PERKINS, DEC'D.
G. S. PERKINS, EXECUTRIX.
GLUE SPREADER.
APPLICATION FILED MAR. 13, 1911.

1,238,810.

Patented Sept. 4, 1917.
5 SHEETS—SHEET 2.

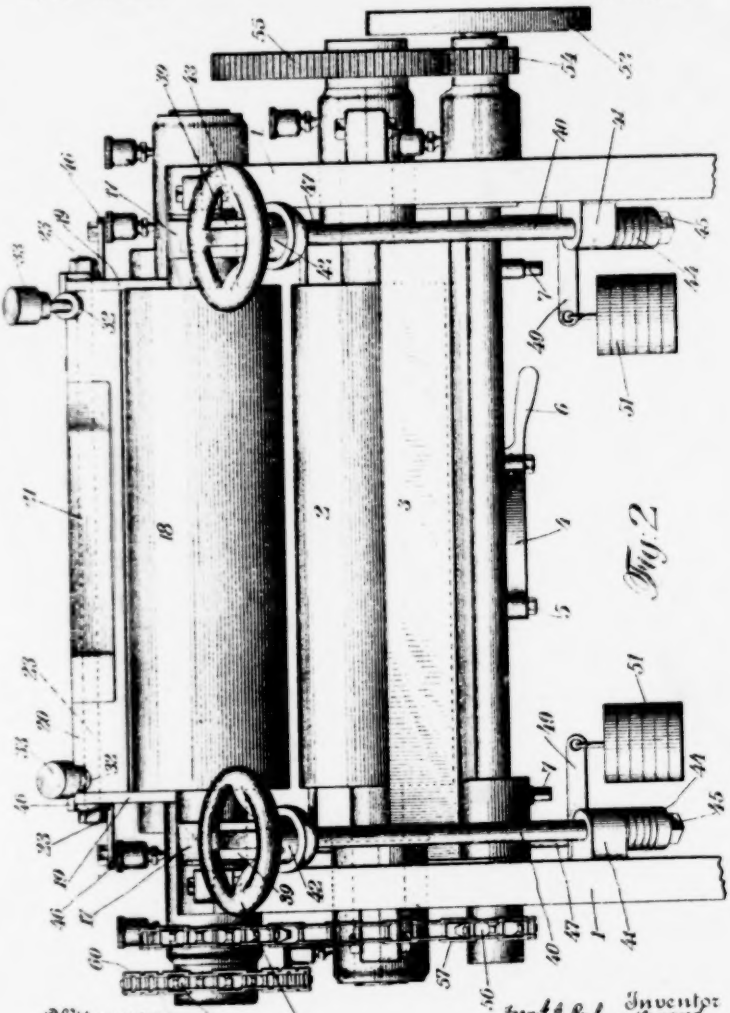

Fig. 2

Witnesses:
Julius O. Gempler
Geo. M. Harris

Inventor
Frank G. Perkins, deceased
by Gertrude S. Perkins, Executrix
By Attorneys
Kenyon & Kenyon

F. G. PERKINS, DEC'D.
G. S. PERKINS, EXECUTRIX.
GLUE SPREADER.
APPLICATION FILED MAR. 13, 1911.

1,238,810.

Patented Sept. 4, 1917.
5 SHEETS—SHEET 3.

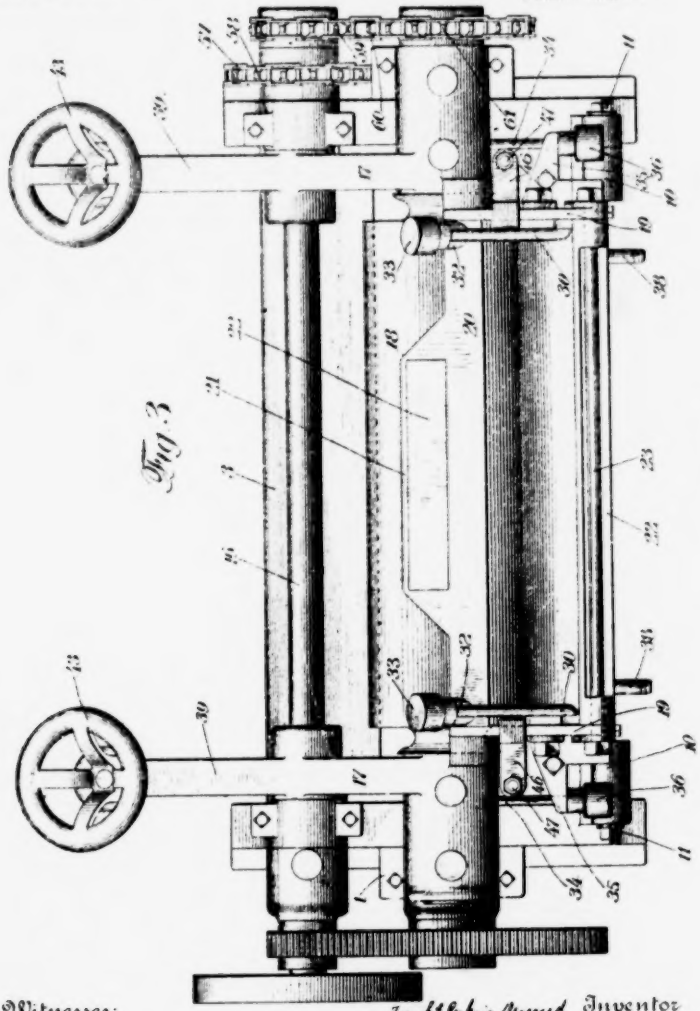

Witnesses:
John D. Gempler
Geo. M. Harris

Frank G. Perkins, Deceased Inventor
by Gertrude S. Perkins, Executrix
By Attorneys
Kenyon & Kenyon

296

F. G. PERKINS, DEC'D.
G. S. PERKINS, EXECUTRIX.
GLUE SPREADER.
APPLICATION FILED MAR. 13, 1911.

1,238,810.

Patented Sept. 4, 1917.
5 SHEETS—SHEET 4.

Fig. 4

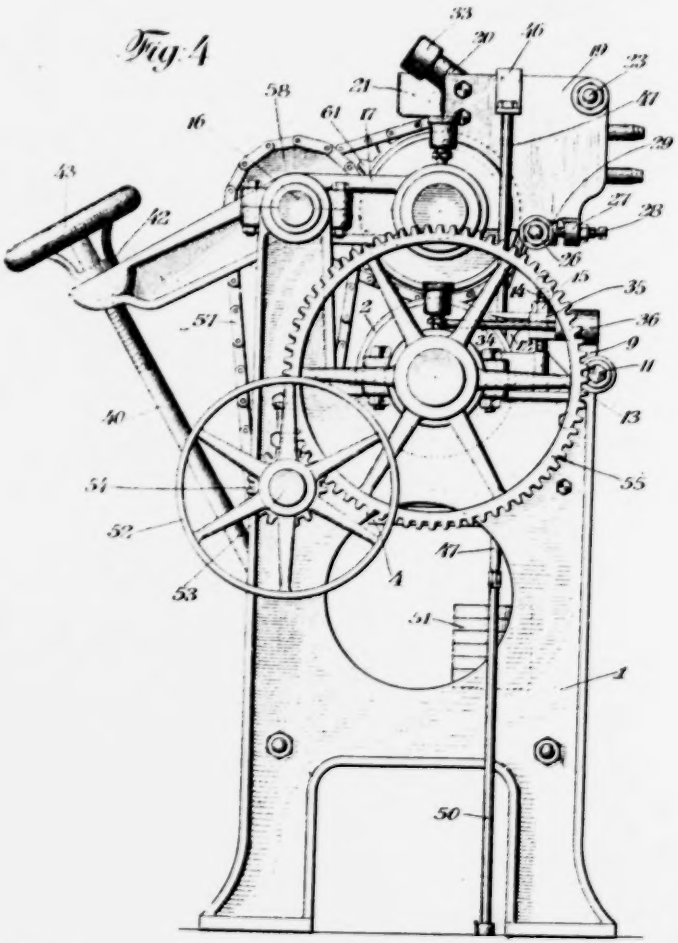

Witnesses:
John O. Gempler
Geo. M. Harris

Frank G. Perkins Deceased Inventor
by Gertrude S. Perkins Executrix
By Attorneys
Kenyon & Kenyon

F. G. PERKINS, DEC'D.
G. S. PERKINS, EXECUTRIX.
GLUE SPREADER.
APPLICATION FILED MAR. 13, 1911.

297

1,238,810.

Patented Sept. 4, 1917.
5 SHEETS—SHEET 5.

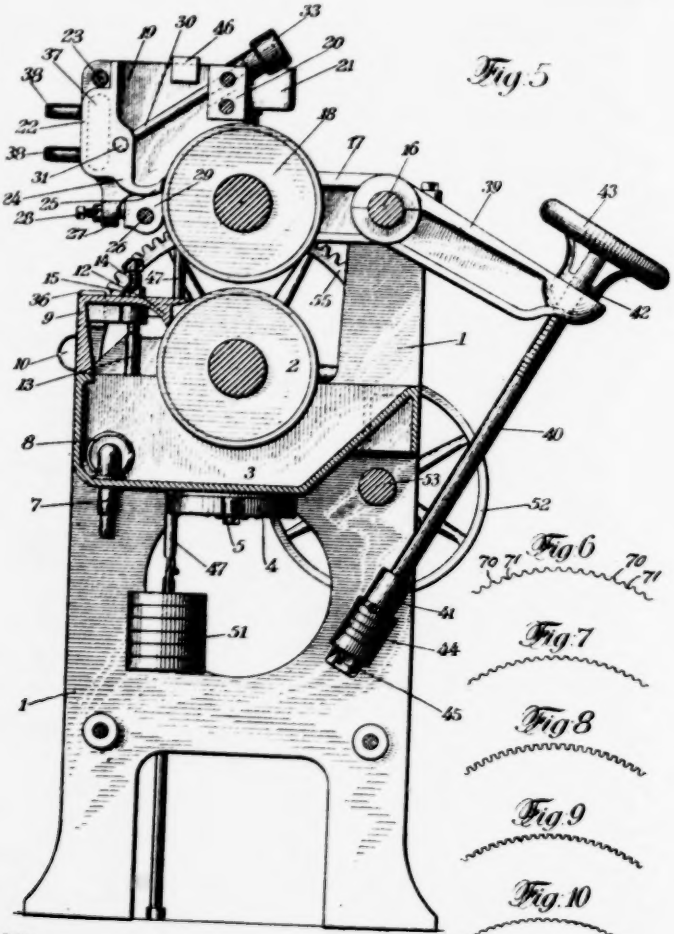

Witnesses:
John O. Gempler
Gedin Harris

Frank G. Perkins, Deceased Inventor
by Gertrude S. Perkins, Executrix
By Attorneys
Kenyon & Kenyon

UNITED STATES PATENT OFFICE.

FRANK G. PERKINS, DECEASED, LATE OF LANSDALE, PENNSYLVANIA, BY GERTRUDE S. PERKINS, EXECUTRIX, OF LANSDALE, PENNSYLVANIA, ASSIGNOR TO PERKINS GLUE CO., A CORPORATION OF PENNSYLVANIA.

GLUE-SPREADER.

1,238,810. Specification of Letters Patent. Patented Sept. 4, 1917.

Application filed March 13, 1911. Serial No. 614,038.

To all whom it may concern:

Be it known that FRANK G. PERKINS, deceased, late of Lansdale, borough of Lansdale, State of Pennsylvania, did invent certain new and useful Improvements in Glue-Spreaders, of which the following is a specification.

The invention relates to improvements in glue spreaders, and more particularly to glue spreaders which are adapted to apply a vegetable glue such as described in United States applications for Letters Patent, Serial Nos. 460,737 and 460,738, filed November 2, 1908, to both sides of a strip or sheet or wood simultaneously. Various objects of the invention are to provide a glue spreader of the class described, which has few parts and is easily and cheaply manufactured; one which is especially efficient in construction and operation and one which has various features enabling it to be easily manipulated. Further objects, features and advantages will more clearly appear from the detailed description given below, taken in connection with the accompanying drawings, which form a part of this specification.

Referring to the drawings, Figure 1 is a front view of the machine, the lower portion of the legs of the frame being cut away. Fig. 2 is a similar but rear view of the machine. Fig. 3 is a top plan view of the machine. Fig. 4 is an end view of the machine. Fig. 5 is a vertical section of the machine, taken on the line V—V of Fig. 1. Figs. 6, 7, 8, 9 and 10 show the manner in which the glue rolls may be corrugated.

Referring to the various figures, 1 represents a suitable frame, in which is journaled a lower glue applying roll 2. Situated below the roll 2 and extending the whole length of the same is a lower glue trough 3 for applying glue to the cylindrical surface of roll 2. Glue trough 3 has an opening in its bottom for withdrawing glue from the trough, this opening being normally covered by a gate 4, hinged at 5 and provided with a handle 6 for moving the gate. Extending up through the bottom of the glue trough 3 are two steam pipes 7, which connect with an enlarged steam pipe or cylinder 8, extending longitudinally in the glue trough 3 for the purpose of supplying steam or hot water to heat or keep the glue warm within the trough 3. At the front side of the machine there is provided a member 9, the top of which forms a table on which the material to be glued may rest when it is being admitted to the machine. The member 9 has one part thereof forming a substantial extension for the front side of the glue trough 3 and is pivotally mounted on the main frame 1 at 10 by means of bolts 11. The member 9 carries on its inner end a scraper 12, adapted to remove the surplus glue from the roll 2, as it revolves. At each end of the machine there is provided a stop 13, on the main frame 1, and coöperating therewith and passing vertically through the member 9 at some distance from the point 10 are adjusting set screws 14, provided with locking nuts 15. By adjusting the position of the set screws 14 within the member 9, the position of the scraper 12 in respect to the surface of the glue roll 2 may be adjusted as desired and the downward movement of the scraper 12 toward the glue roll 2 may be limited to any desired position. Pivotally mounted on the main frame 1 and on the shaft 16 is a frame 17. The shaft 16 is above or at one side of a vertical plane through the axis of roll 2. Journaled in the frame 17, above the roll 2, is an upper glue applying roll 18. Rigidly fixed to frame 17 and coöperating with the roll 18 are the ends 19 of an upper glue applying trough for the glue roll 18. The rear side of this trough 20 is also rigid with the frame 17, and the rear side 20 is provided with a bulging portion 21, hollowed out as at 22 (see Fig. 3), in which hollowed out portion there is placed a block of wood or other suitable material, the top surface of which lies flush with the top surface of the member 20. The front side of the upper glue trough consists of a member 22, hinged to the ends 19, as by a shaft 23. The front side 22 of the upper glue trough also carries a portion forming the bottom 24 of the glue trough, which, in turn, carries a scraper 25 for the upper glue roll. At the lower portion of the upper glue trough is provided a rod 26, which, together with shaft 23, serves to hold the ends 19 of the upper glue trough in position. Extending downwardly from the member 22 are lugs 27 at each end of the machine, through which pass set screws 28, coöperating with stops 29 upon the end pieces 19. By means of the set screws 28 and stops 29 the position of the front wall of the

upper glue box may be adjusted as desired, and consequently the movement of the scraper 25 toward the upper glue roll 18 may be limited and adjusted to any desired position.

For the purpose of holding the scrapers 25 in the adjusted position with respect to the glue roll 18, there is provided at each end of the machine a swinging member 30, swinging about a bent portion 31 as a pivot. Bent portions 31 of the arms 30 are, as shown in Figs. 3 and 5, passed into the front wall 22, inside of the upper glue trough. The arms 30 are adapted to seat in recesses 32 in the member 20 and the arms 30 are provided with nuts 33 on their outer ends, so that when the arms 30 are seated in the recesses 32 the nuts 33 may be turned and thus draw the member 22 and scraper 25 inwardly until the set screw 28 engages the stop 29 to limit the movement of the scraper toward the upper glue roll and hold it in its adjusted position. When it is desired to release the front member 22 and the scraper 25, it is only necessary to give the nuts 33 a slight turning movement, when the arms 30 may be thrown upwardly and swung about their pivots 31, thus releasing the entire front wall 22 and the scraper 25, so that it may be easily moved backward and away from the roll 18 as far as desired.

For the purpose of holding the scraper 12 for the lower roll 2 in its desired adjusted position, there are provided arms 34 (see Figs. 3 and 4), which arms have a bent portion extending into the hubs of the lower glue roll. The arms 34 are adapted to engage and be seated within forked members 35 in a similar manner to that in which the arms 30 are seated within the forked members formed by the recesses 32 in the member 20. The arms 34 carry at their outer extremities nuts 36, so that by turning the nuts 36 they will pull against the forked members 35 which are rigidly secured to the upper part of the member 9 and thus force the scraper 12 inwardly and toward the glue roll 2 about its axis at 10. If it is desired to release the scraper 12 it is only necessary to give the nuts 36 a slight backward turn, when the arms 34 may be swung outwardly in a horizontal plane, thus entirely freeing the scraper 12 so that it may be moved away from the glue roll 2 as far as desired about its axis 10.

The particular arrangements of adjusting and locking above described are particularly advantageous, since they allow of the most quick and easy access to all of these parts of the machines, enabling them to be readily cleaned, repaired, replaced, etc.

For the purpose of heating the glue within the upper glue trough, the front wall 22 is provided with a hollow portion therein 37, extending substantially the whole length of the upper trough. Steam pipes 38 are provided for supplying steam or hot water to this space 37 in order to properly heat the glue in the upper trough. Rigid with the pivoted arm 17 and extending in the opposite direction from the shaft 16 are arms 39, one at each end of the machine. Also fixed, one to each end of the main frame of the machine, as at 41, are rods 40, which extend upwardly and pass through apertures in the arms 39. Above the arms 39 the rods 40 are provided with adjusting nuts 42 carrying hand wheels 43, the nuts 42 resting in cup shaped depressions in the ends of the arms 39. The length of the arms or rods 40 may be adjusted by inserting spacing members 44 between the nuts 45 on the ends of the rods 40 and the lugs 41 on the main frame of the machine.

It will therefore be seen that by merely turning the hand wheels 43 the arms 39 will be moved upwardly or downwardly, as desired, thus at the same time moving the upper glue roll 18 so that the space between it and the lower glue roll 2 may be adjusted as desired.

In order to help force the upper glue roll downwardly toward the lower glue roll 2, there is provided a clip 46 extending over the ends 19 at each end of the machine, to each of which clips are bolted rods 47. The lower ends of the rods 47 are pivotally connected at 48 to a lever member 49. One end of the lever member 49 is held in fixed position by means of a rod 50, secured to the floor or base of the apparatus. The lever 49 is pivoted to the upper end of the rod 50 to form a fulcrum point. At the outer end of the lever 49 or at the end of its long arm, there is connected an adjustable weight or weights 51. It will therefore be seen that the weights 51, pulling downwardly on the arm 49 and rods 47, which are connected to the ends 19 of the frame 17, tend to force that portion of the frame 17 carrying the upper glue roll 18 downwardly and toward the lower glue roll. By adjusting the size and weight of the weights 51 the pressure which the upper glue roll 18 exerts downwardly may be adjusted as desired. For driving the apparatus there is provided a main driving wheel 52, suitably journaled to the main frame. The driving wheel 52 is fixed to a shaft 53, which carries a gear wheel 54, which, in turn, meshes with a gear wheel 55 secured to the lower glue roll 2, for the purpose of driving the same. At the other end of the machine a shaft 53 carries a sprocket wheel 56, over which passes a sprocket chain 57, which, in turn, passes over a sprocket wheel 58, having the same axis as the shaft 16, about which the frame 17 is pivoted. Rigid with the sprocket wheel 58 and concentric therewith, is a sprocket wheel 59, over which passes a sprocket chain

60, which, in turn, passes over a sprocket wheel 61, secured to the upper glue roll 18, to drive the same. By this arrangement it will be seen that the main driving wheel 52 positively drives both the upper and lower glue rolls and that the position of the upper glue roll may be adjusted up or down, as desired, without in any way interfering with the driving mechanism. This is of very considerable importance in this class of machines, as it often happens that the glue rolls have to be frequently adjusted and it is important that the necessary manipulations for this purpose be decreased to a minimum.

In order that the glue may be applied properly to the wood or other material when run through the machine between the rolls, the surfaces of the glue rolls are corrugated longitudinally and these corrugations may take the form, as shown in Figs. 6, 7, 8, 9 and 10, according to the quality of the glue and the depth or thickness of glue desired and character of material operated upon.

As shown in Fig. 6 the corrugations have substantially flat faces 70 which engage the material operated upon, and depressions 71 with curved bottoms and sides whereby the sides of the depressions are materially inclined to one another so that the depressions are without sharp corners and will more readily fill. If the depressions were rectangular in cross-section sharp corners would be formed which would not entirely fill with the glue upon a single revolution of the roll, but would finally fill upon further revolution of the roll. With such a roll when a new piece of material is started through the machine the roll will apply a full coating to the material during the first revolution because the depressions are practically filled, but on the second, and further revolutions of the roll the depressions only dip once into the glue so that the sharp corners do not become completely filled, and accordingly, after the first revolution of the roll a thinner coating of glue is applied. This is disadvantageous because it results in unevenness in the thickness of coating on the same piece of work, which is very undesirable. The depressions should therefore have such shape that they will substantially completely fill with a single revolution of the roll. This may be done by inclining the sides of the depressions sufficiently so that the glue is easily fed into all parts of the depressions to readily fill the same. As shown in Figs. 6 to 10 the depressions are sufficiently close to one another so that when the glue is deposited upon the material from the depressions it will readily spread over the blank spaces engaged by the flat faces, as 70, and form a substantially continuous coating of glue on the material. The corrugations in Fig. 7 are somewhat smaller than those of Fig. 6, so that a somewhat thinner coating is applied by this form of roll. In Figs. 8 and 9 the depressions are made relatively deeper and the upper sides of the depressions are parallel to one another or nearly so. This form gives a relatively larger flat biting face for engaging the material at the same time providing depressions of sufficient volume to properly cover the material with glue. Corrugations of this form are, however, less likely to become completely filled with glue with a single revolution of the roll, but this disadvantage of non-filling is largely, if not entirely, overcome by curving the bottoms of the depressions so that they are without sharp corners.

Although the improvements have been described in great detail, nevertheless, it is not desired to limit the invention to such details, except as clearly pointed out in the appended claims, since many changes and modifications may well be made without departing from the spirit and scope of the invention.

However, having fully described the improvements, what is claimed as new and desired to be secured by Letters Patent, is:

1. In a glue spreader, a main frame, a lower glue roll journaled in said frame, a glue trough below said roll, a pivoted scraper for said glue roll, a stop and set screw for limiting the downward movement of the scraper toward the roll, said scraper having a forked portion, a swinging arm having its axis in the main frame and arranged to engage said forked portion, a nut on said arm arranged to engage said forked portion to hold the scraper in place, a pivotally mounted frame, an upper glue roll journaled in said last mentioned frame, a glue trough for the upper roll secured to said last mentioned frame, a pivotally mounted scraper for the upper glue roll, a stop and set screw for limiting the movement of said last mentioned scraper toward the upper glue roll, a forked portion on said last mentioned frame, an arm swinging on said scraper at one end and engaging said forked portion at the other end, a nut on said arm for holding the arm and upper scraper in position, an arm carried by said pivotally mounted frame, a rod extending from a point on the main frame to said last mentioned arm and a nut on said rod adjacent said arm for moving the arm to raise or lower the upper glue roll.

2. In a glue spreader, a main frame, a glue roll journaled in said frame, a glue trough beneath said roll, a pivotally mounted scraper for said roll, a stop and coöperating set screw for limiting the movement of the scraper toward the roll, a forked member and a swinging arm carrying a nut both coöperating with said forked member to hold the scraper toward said glue roll.

3. In a glue spreader, a frame, a glue applying roll journaled in said frame, a glue trough for said roll, a scraper for said roll having a normally fixed edge for scraping surplus glue from said roll, so as to leave the desired amount of glue on the roll to apply to the material to be glued, means pivotally mounting said scraper on the frame, a screw for adjusting the movement of the scraper edge toward the roll, a stop coöperating with said set screw for positively limiting the movement of the scraper edge toward the roll, and means, as a nut for moving said scraper edge into position toward the roll by a wedge or cam action.

4. In a glue spreader, a frame, a glue roll journaled in said frame, a glue trough adjacent said roll for feeding glue thereto, a movable scraper for the glue roll, a forked member, and a swinging arm and an abutment on said arm both coöperating with said forked member to hold the scraper toward the glue roll.

5. In a glue spreader, a frame, a glue roll journaled in said frame, a glue trough adjacent said roll for feeding glue thereto, a movable scraper for the glue roll, a forked member, a swinging arm and a nut on said arm coöperating with said forked member to hold the scraper toward the glue roll, said arm being pivotally mounted on the frame and said forked member being on the scraper.

6. In a glue spreader, a frame, a glue roll journaled in said frame, a glue trough adjacent said roll for feeding glue thereto, a movable scraper for the glue roll, a forked member, a swinging arm and a nut on said arm coöperating with said forked member to hold the scraper toward the glue roll, said arm being pivotally mounted on the scraper and said forked member being on the main frame.

7. In a glue spreader, a frame, a glue roll journaled in said frame, a glue trough for said roll, a pivotally mounted scraper for said roll, a stop and coöperating set screw for limiting the movement of the scraper toward the roll, a forked member and a swinging arm carrying a nut both coöperating with said forked member to hold the scraper toward said glue roll.

8. In a glue spreader, a main frame, a lower glue roll journaled in said frame, a glue trough below said roll for feeding glue thereto, a second frame pivotally mounted with respect to the first, an upper glue roll journaled in the second frame, and a glue trough carried by the pivotally mounted frame for feeding the upper glue roll, a scraper for the lower roll, means for adjusting the position of the scraper with respect to the lower roll, said means including a stop and coöperating set screw for limiting the movement of the scraper toward the lower roll and a swinging member for holding the lower scraper in position toward the lower glue roll, a scraper for the upper glue roll and means for adjusting the position of said last mentioned scraper with respect to the upper roll, said last mentioned means including a stop and coöperating set screw for limiting the movement of the upper scraper toward the upper roll and a swinging arm for holding the upper scraper in position toward the upper roll.

9. In a glue spreader, a main frame, a lower glue roll journaled in said frame, a glue trough for feeding glue to said roll, a frame pivotally mounted to said main frame, an upper glue roll journaled in said last mentioned frame, a glue trough for said upper roll, the back and bottom of said last mentioned trough being pivoted to the ends thereof and the bottom carrying a scraper for the upper roll, a stop and coöperating set screw for limiting and adjusting the movement of said scraper toward its roll, and a swinging arm for holding said scraper in position toward its roll.

10. In a glue spreader, a frame, a glue applying roll journaled in said frame, a glue trough adjacent said roll for feeding glue thereto, said trough having a swinging bottom and back pivotally mounted on the ends of said trough and swinging between the ends of said trough, said bottom carrying a scraper for the roll, a stop and coöperating set screw for limiting the movement of the scraper toward the roll, and a swinging arm engaging a forked member for holding the scraper in position.

11. In a glue spreader, a main frame, a lower glue roll journaled in said frame, a glue trough below said roll for feeding glue thereto, a second frame pivotally mounted to the first, an upper glue roll journaled in the second frame, and a glue trough carried by the pivotally mounted frame for feeding the upper glue roll, an arm carried by the pivoted frame and in fixed relation thereto, and means operating upon said arm to move the second frame about its pivot to adjust the position of the upper glue roll, said means embracing a rod connected with the main frame and a nut coöperating with said arm and rod for raising or lowering the upper glue roll.

12. In a glue spreader, a main frame, a lower glue roll journaled in said frame, a glue trough below said roll for feeding glue thereto, a second frame pivotally mounted to the first, an upper glue roll journaled in the second frame, and a glue trough carried by the pivotally mounted frame for feeding the upper glue roll, two arms carried by the pivoted frame one at each end of said frame, and in fixed relation thereto two rods one at each end of said frame, one end of each rod being secured to the main frame

and a nut and hand wheel operating on each rod and coöperating with said arms to lower or raise the upper glue roll.

13. In a glue spreading machine, upper and lower glue rolls, a scraper for each roll and a swinging arm and a forked portion on the machine for each scraper to hold the scrapers in position with respect to said rolls.

14. In a glue spreading machine, a glue applying roll, a scraper for said roll and a swinging member and a forked portion at each end of the machine, said swinging members engaging said forked portions to hold the scraper in position with respect to said roll.

15. In a glue spreader, a main frame, a lower glue roll journaled in said frame, a glue trough below said roll, a pivoted scraper for said glue roll, a stop and set screw for limiting the downward movement of the scraper toward the roll, said scraper having a forked portion, a swinging arm having its axis in the main frame and arranged to engage said forked portion, a nut on said arm arranged to engage said forked portion to hold the scraper in place, a pivotally mounted frame, an upper glue roll journaled in said last mentioned frame, a glue trough for the upper roll secured to said last mentioned frame, a pivotally mounted scraper for the upper glue roll, a stop and set screw for limiting the movement of said last mentioned scraper toward the upper glue roll, a forked portion on said last mentioned frame, an arm swinging on said scraper at one end and engaging said forked portion at the other end, a nut on said arm for holding the arm and upper scraper in position, an arm carried by said pivotally mounted frame, a rod extending from a point on the main frame to said last mentioned arm and a nut on said rod adjacent said arm for moving the arm to raise or lower the upper glue roll, a sprocket wheel secured to the upper glue roll for driving the same, a sprocket wheel having the same axis as said pivotally mounted frame, a sprocket chain running over said sprocket wheels, and means for positively driving said second mentioned sprocket wheel and said first mentioned glue roll.

In testimony whereof, I have signed my name to this specification in the presence of two subscribing witnesses.

GERTRUDE S. PERKINS,
Executrix of said Frank G. Perkins.

Witnesses:
L. McMillen,
Chas. L. Ziegler.

No. 779,583. Patented January 10, 1905.

UNITED STATES PATENT OFFICE.

HEZEKIAH KIBBE BROOKS, OF BELLOWS FALLS, VERMONT, ASSIGNOR TO CASEIN COMPANY OF AMERICA, A CORPORATION OF NEW JERSEY.

PROCESS OF PRODUCING ADHESIVES.

SPECIFICATION forming part of Letters Patent No. 779,583, dated January 10, 1905.

Application filed February 24, 1904. Serial No. 195,089.

To all whom it may concern:

Be it known that I, HEZEKIAH KIBBE BROOKS, a citizen of the United States, residing at Bellows Falls, in the county of Windham and State of Vermont, have invented or discovered certain new and useful Improvements in Processes of Producing Adhesives, of which the following is a specification.

This invention relates to sizes and adhesives of that class in which starch or other amylaceous material is used. There are several known methods for treating these materials by the use of persulfates and acids in such a way as to render them less hygroscopic, or "modifying" them, as it is sometimes called; but the sizes and adhesives produced from amylaceous substances by the present process are open to the following objections: First, these materials when dissolved do not form amber-colored solutions, which is so characteristic of dissolved animal glue, nor do these solutions possess the "quick tackiness" nor the property of drying out as quickly as glue; second, when these solutions are dried the resulting material has a dull and milky appearance and is of such a nature that it crumbles easily; third, when these materials have been dried and water is again added thereto they do not form solutions like those formed before the drying out in that the tackiness, transparency, and flowing qualities have largely disappeared.

The present invention or discovery obviates the foregoing objections by the use of persulfate and acid and secures amylaceous adhesive products more nearly resembling animal glue than any of the similar products previously made.

The invention or discovery may be carried into effect in the following manner: Mix one hundred pounds of dry fecula with one pound of persulfate (preferably persulfate of ammonia) and fifteen pounds of water. Add two pounds of sulfuric acid, which will usually raise the temperature of the mixture to about 120° Fahrenheit. Should the temperature of the mixture not come up to this point, heat should be applied until the temperature of the mixture has been brought up to about 120° Fahrenheit. The mixture is then preferably agitated at a temperature of at least 100° Fahrenheit, but preferably at a temperature of about 120° Fahrenheit, to modify the fecula. The mixture or modified fecula is then preferably washed or neutralized to eliminate the free acid and the resulting ammonium sulfate. If the product is to be employed as an adhesive to be applied to envelops or labels, a well-washed material free from chemicals which impart a bad taste thereto is better than a neutralized material, although the neutralizing process by the use of any alkali or alkaline salt may be more quickly and easily performed. After being washed or neutralized the modified fecula should be heated to a temperature of about 150° Fahrenheit or above, when it will quickly dissolve and present a very close resemblance in amber-colored appearance and transparency to dissolved animal glue and will be about the same density.

Instead of following the process above described the proportions of persulfate and sulfuric acid may be materially lessened by performing the modifying process at a temperature of about 200° Fahrenheit. Thus one hundred pounds of fecula may be modified, if the modifying process be carried on at a temperature of about 200° Fahrenheit, with about one-half pound of the persulfate and one pound of the acid. In this case the acid should first be added to the fecula and the persulfate dissolved in about an equal amount of water, then be added to the fecula and acid mixture, with a suitable quantity of water.

If the fecula be heated to raise it to the high temperature just referred to in a jacket-kettle, about fifteen pounds of water should be added to one hundred pounds of dry fecula; but if, as is preferable, the fecula be heated by the admission thereto of live steam there will be about fifteen pounds of water present from condensation, and the high temperature to which the mixture is subjected in the agitating modifying process will also dissolve the mixture.

For the purpose of neutralizing the fecula

as hereinbefore referred to it is preferable to use with one hundred pounds of the fecula about three pounds of borax, which should be added as the last step in the "modifying" process, so called. If, however, the free acid and ammonium sulfate be removed by washing instead of being neutralized, about one pound of borax should be added to one hundred pounds of the mixture to make the product slightly alkaline, and thus insure a complete solution of the starch cellulose of the fecula.

After being dissolved the material may be removed to any suitable drier and dried out at a temperature not exceeding 250° Fahrenheit. When the product comes from the drier, it will be in its amber-colored appearance and transparency, as also in its sizing and adhesive qualities, very much like animal glue.

The results of modifying fecula by this process depend somewhat upon the temperature at which the modifying process is carried on as well as upon the chemical treatment with acid and persulfate. If for any reason a low temperature be desired, then much larger percentages of the chemicals are required. If, however, a high temperature be not objectionable, then much smaller percentages of the chemicals may be employed. So far as can now be determined a high temperature is not objectionable, excepting that the material when it comes from the modifying-tanks is more gummy and more difficult to dry out.

Having thus described my invention or discovery, I claim and desire to secure by Letters Patent—

1. The herein-described process of producing an amylaceous glue or adhesive, consisting in subjecting a fecula to the simultaneous action of heat, a persulfate and an acid in the presence of water, and then treating it with an alkaline substance.

2. The herein-described process of producing an amylaceous glue or adhesive, consisting in subjecting a fecula to the simultaneous action of heat, persulfate of ammonia, sulfuric acid, and water, during agitation, and then treating it with an alkaline substance.

3. The herein-described process of producing an amylaceous glue or adhesive, consisting in subjecting the fecula to the simultaneous action of heat, a persulfate and an acid and water, and then neutralizing the product or rendering it slightly alkaline by adding borax thereto.

4. The herein-described process of producing an amylaceous glue or adhesive, consisting in subjecting a fecula to the simultaneous action of heat, persulfate of ammonia, sulfuric acid and water, and then adding borax to the product thus formed.

In testimony whereof I affix my signature in presence of two witnesses.

HEZEKIAH KIBBE BROOKS.

Witnesses:

DANIEL A. LINTON.

C. H. CAPRON.

[fol. 305] Library U. S. Patent Office, Apr. 23, 1898

No. 12,326, A. D. 1897

Date of Application, 18th May, 1897—Accepted 5th Mar., 1898

Complete Specification

A New or Improved Vegetable Glue and a Process for Manufacturing the Same

I, Siegfried Herzberg, of 139 Potsdamerstrasse, Berlin, Doctor of Medicine do hereby declare the nature of this invention and in what manner the same is to be performed to be particularly described and ascertained in and by the following statement:

This invention relates to a new or improved vegetable glue and to a process for manufacturing the same, and has for its objects the production of a strongly adhesive glue in a simple and cheap manner. It consists essentially of dissolving potato flour in acidulated water and afterwards adding an alkali thereto.

A convenient method of producing a glue according to this invention is as follows: To a suitable quantity of water, preferably soft or rain water, is added from 2 to about 6% of sulphuric acid, this acidulated water is then gradually warmed and has slowly added thereto with continual stirring from 5 to 30% (according to the purpose for which the resultant glue is required) of potato flour, when the potato flour is perfectly dissolved, which may take from one to three hours there is added from 2 to 5% sodium hydroxide (Na H O) or other suitable alkali, after having cooled the glue is ready for use or for being filled into bottles or other receptacles for storing.

Having now particularly described and ascertained the nature of my said invention and in what manner the same is to be performed, I declare what I claim is:

(1) A vegetable glue consisting essentially of potato flour dissolved in warm acidulated water to which is afterwards added a suitable alkali.

(2) A process for the manufacture of a vegetable glue characterized by the fact that water, acidulated with from 2 to about 6% of sulphuric acid, is warmed [fol. 306] and has added thereto with constant stirring from 5 to 30% of potato flour and after the flour has become dissolved adding from 2 to 5% of a suitable alkali such as sodium hydroxide.

(3) A new or improved vegetable glue and process for manufacturing the same substantially as hereinbefore described.

Dated this 18th day of May, 1897.

Robert E. Phillips, Assoc. M. Inst. C. E., M. I. Mech. E. Consulting Engineer and Patent Agent, 70 Chancery Lane, London, W. C., Associate Agent.

Redhill: Printed for Her Majesty's Stationery Office by Malcomson & Co., Ltd.—1898.

(Price 8d.)

No. 232,781

Copy of a Patent of an Invention

Applied for Sept. 13, 1893

Delivered Dec. 11, 1894

By Monsieur Richard Jules Dornemann

For a New Industrial Process for Making Agglutinants from Fecula and Their Applications

(Content)

Copy of Patent of an Invention

Applied for Sept. 13, 1893

Delivered December 11, 1893

By Monsieur Richard Jules Dornemann

A new industrial process for making pastes (or mucilages) from fecula and their applications.

A descriptive dissertation giving evidence in support of an application for a patent.

The invention of which I claim exclusive possession is characterized by the following operations:

I take as a fundamental raw material the potato, manioc or other starch; this I dilute with the amount of water necessary for making a sort of milk of it, without any lumps.

Then I add to the liquid mixture thus obtained a chemical product, a chloride or an alkali capable of opening the cells [fol. 307] of the starch in order to obtain the agglutinant matter which is contained in them.

According to the soils and the processes of cultivation the starch offers different natures and different degrees of richness, enclosing more or less of the cells with the agglutinant matter, which cells abandon with more or less difficulty that matter which constitutes the agglutinant.

According then to the starch in question to be treated, I use in an analagous way and always contributing towards the same result announced above, either a chloride (of calcium or magnesium preferably) in the proportions of about 80 kilograms to 100 K. of the starch or an alkali of potassium or sodium (caustic preferably) in the proportion of 20 to 30 K. for 100 K. of the starch.

I accomplish this treatment (which can be done at high or at low temperature, according to whether you want more or less speed) in a mixing (or kneading) vat, preferably of pine wood, but which could be of any other material not susceptible of being attacked by the products that I use. The form of this vat can be of any sort, cylindrical or trunk-shaped, with a circular or elliptical section for instance and dimensions suitable to the quantities that one wishes to treat.

The kneading is done by hand or mechanically by means of an agitator with paddles placed inside the vat; for the perfection and regularity of the operations to be done, the agitation is produced at the lower part of the vat; the paddles are arranged at a short distance from the bottom and the shaft which bears them traverses the bottom, receives its movement either below the vat or at the side by means of set of gear wheels, so that no medium of transmission comes up to the upper part of the liquid, which avoids

all throwing out and rising of the agglutinant being manufactured.

The length of time of the operation, varying according to the starch employed, is included between ½ hour and 2 hours, according also to the product that one wishes to obtain.

For most applications there is nothing to do except to let the liquid agglutinant thus obtained flow out of the little doors arranged in the lower part of the vat at the periphery (surface or outside).

This agglutinant paste is sent directly into the receivers for that purpose, and it is allowed to settle, skimming it if necessary, during a time suitable for it to take the desired consistency.

[fol. 308] With the use of caustic soda or potash, an alkaline agglutinant is obtained, which one can use for every purpose where this alkaline state is not injurious.

But in certain cases, one may need neutral or even slightly acid or finally even slightly alkaline agglutinant.

For these cases, before letting the liquid flow from the kneading vat, it is made to undergo the following complementary operations: An acid of any sort (hydrochloric for instance) is added until the initial excess of alkali is exactly neutralized and until the mass is neutral with both red and blue litmus papers. One stops there if he wishes a neutral adhesive; or he adds a little acid or a little alkali, according to whether he wants a slight acidity or slight alkalinity according to the usage for which the paste is designed.

This additional operation lasts from ½ to one hour.

It is usefully finished by the addition of an antiseptic, in the strength of from ½ to 1%, salycilic acid, carbolic acid (phenol) boracic acid or any other antiseptic.

Lastly, for certain applications for which one would like an agglutinant having more body or consistency, I add also, in the proportion of 10 to 30%, an inert material such as barium sulfate, kaolin, sodium or potassium silicate, etc., having no chemical action and not modifying the processes that I have described for the manufacture of the paste itself.

A Resume

I claim as my invention and as my exclusive property the new industrial process for the manufacture of agglutinants from starch; with the special arrangements for mixing that I have indicated, the additional operations stated before for obtaining alkalinity, neutrality or acidity; for increasing the consistency of the manufactured products; and finally the numberless applications of the agglutinants prepared in this way, which can be used in the same cases that all of the agglutinants glues or finishing materials are used, while producing results that are much more energetic and much more lasting.

Defendants' Exhibit, Translation of French Patents

[fol. 309] French Republic, National Office of Industrial Property

Patent of Invention

Chemical Arts. No. 366,903

Patent of 15 years applied for November 23, 1903, by the Corporation called: "The Calico Printers' Association Limited and Messieurs William Browning and John James Barlow living in England. Process and apparatus for the production of soluble starch and of dextrine.

Delivered January 30th, 1904; published March 21st, 1904.

Application for patent deposited in England September 10, 1903. Declaration of the affirmant.

This invention refers to a process and an improved apparatus designed for the manufacture of soluble starch, and of destrin by the aid of starch, in the form of powder and of an acid in the form of a gas, a vapor or a spray.

For the realization of the invention, starch in the form of powder is used (which can be either the ordinary commercial starch extracted from potatoes, tapioca, sago, wheat, corn, rice, etc., or any other starch) and an acid in the form of a gas, a vapor or a spray and the two substances are mixed in any apparatus for that purpose, but preferably in that described later in this paper in detail,

and which allows soluble starch or dextrine to be obtained rapidly and at little expense. This apparatus is formed, in principle, by a rotating barrel or converter, one of the axel trees of which is hollow and gives passage to a fixed tube of glass, porcelain or any other suitable material, which penetrates in the converter and is prolonged there, preferably by a part ascending in the form of a swan's neck.

The converter is maintained at a temperature of about 54° C. and the starch, which is generally slightly damp under normal conditions is preferably, and with the object of increasing the speed of the operation, partially dried and heated to the temperature indicated above before its introduction into the converter. That once done, the converter is made to turn or oscillate slowly and a suitable acid, such as hydrochloric, or nitric, but preferably hydrochloric, [fol. 310] in form of a gas, a vapor or a spray, is sent there by means of the tube shaped like a swan's neck; the heating at 54° is continued until a sample, taken from the converter and tested by letting it boil in a weight of water substantially equal to its own weight, dissolves in it giving a clear fluid.

When, in stead of soluble starch, it is dextrin that one wishes to obtain, it is sufficient to raise the temperature, bringing it to from 76° C. to 93° C. or even higher.

The vaporization of the acid can be realized in any suitable way; preferably it is done by heating the acid in a distilling flask resting on the scale pan of a pair of scales, as will be described later on, this being in order to be able to recognize and to find out by weight the exact quantity of the acid introduced into the converter.

The two figures of the drawings joined to this paper are two vertical cuts, perpendicular one to the other, of the apparatus of the present system. In 1 can be seen the framework which is formed of uprights upon which are fastened the planks or plates leaving between them a chamber, the upper part of which is occupied by a hopper 3 suspended from the uprights; below this hopper in the resting places made in the uprights 1, is provided a cylinder 4, which is profitably made of sheet iron covered with tin, but which can also be made of any other suitable material; this cylinder serves for the drying and preliminary

heating of the powdered starch, which, poured first into the hopper 3, is introduced into the cylinder by a sliding door 5. The axle trees 6 are hollow; they give passage to a steam pipe 7, which traverses them as well as the cylinder 4. The purpose of this steam pipe is to heat the starch in powder contained in the cylinder. The cylinder 4, upon one of its surfaces, is provided with a door 8, figure 2, which aids the supervision and allows the stirring of the contents whenever it is necessary.

Below the cylinder 4, in the rests made in the uprights, is provided a second cylinder 9 which forms the converter and of which one of the axle trees 10 is solid and the other hollow; on the first of these axle trees is attached a pinion 11 which moves a cogwheel with teeth 12, fixed to a tree of transmission or belt shaft, and also working into the teeth of a second pinion 14, which is fixed upon one of the axle trees 6 and thus puts into motion the drying cylinder 4; for turning or oscillating cylinders 4 and 9 one can naturally make use of any transmission other than that just described and which is represented in the drawings. The [fol. 311] converter 9 is preferably constructed entirely of wood or of wood lined inside with glass, slate, earthenware or of any other material not attacked by acids. In the drawings they have represented a converter composed of 12 traps or squares mounted in the grooves formed in the ribs or longitudinal bars 15, which are carried by the slides 16 of the converter; two of these traps form doors, those which are designated by 17; they are made to glide longitudinally when one wishes to let the powdered starch, which has been heated in the cylinder 4, pass out of it into the converter 9, and also when one wishes to get out the soluble starch or the dextrin out of the latter once the conversion is terminated.

In the one of the axle trees 10, which is hollow, passes a glass tube, one of earthern ware or of any other appropriate substance; this tube penetrates to the interior of the converter and is bent there in the shape of a Swan's neck, of which the extremity can be either completely open or pierced with small holes; the straight part of the tube 18 which is outside of the rest is firmly held by means of a nipper 19 which prevents its turning. The acid vapor that is sent into this tube can come from any source or

any reservoir. In order to be able to regulate more easily the progress of the operation, the quantity of acid used can be determined by weight and for this purpose an arrangement, such as is represented, by way of example, in fig. 1, may be used. It includes a distilling flask 20 resting upon the scale pan of a pair of scales and in which the acid is introduced by a dropping funnel 21 placed in a stopper or cover lid 22 where also penetrates the end of tube 18 which for this purpose is curved downward. The flask 20 rests on a support 23 which is prolonged by a rod 24 which is arranged so that it can slide in a guide 25 and is, in addition, jointed with one of the extremities of a bar 26 forming the beam of the balance. Upon the other extremity of this beam is jointed a rod 28, which can also glide in a guide 25, and carries a scale pan 27. In the metallic support 23 is placed a Bunsen burner 29, to which the gas is conveyed by a flexible tube or folding tube not represented here; this burner furnishes the heat necessary for the distillation of the acid contained in the flask 20, and for driving out the acid thus converted into a gas or vapor, by the swan's neck 18, in the converter 9 where it is absorbed by the hot powdered starch.

[fol. 312] All condensations of the acid which could take place in tube 18 are eliminated by a little emptying tube 30 which is joined to it.

The chamber formed by the uprights 1 and the plates 2 and which contains the hopper 3, the heating cylinder 4, and the converter 9 can be provided in different places with doors permitting access, when necessary, to the various parts of the apparatus; this chamber is, in addition, heated by a system of steam pipes 31, which are suitably arranged near the bottom, as is indicated in Fig. 2.

The working of it is the following. Powdered starch is introduced, say 300 kilograms for instance, by the hopper 3, in the cylinder 4, the doors 5 Fig. 1, being open; then that door is closed and the cylinder 4 is turned until the starch has atttained the desired temperature. The machine is stopped so that the door 5 of the cylinder 4 is placed directly above the traps 17 which will occupy, at the same time, the upper part of the converter 9, the gliding of the traps 17 and the opening of the door 5 is done successively, which allows the dry hot starch powder to pass from cylin-

der 4 in the converter 9. That done, the door 5 is closed and the traps 17. The apparatus is again set in motion and about 3 kilograms of commercial hydrochloric acid, in the form of vapor, taken from flask 20, is admitted to the slowly turning converter; this acid acts from that moment on the starch power contained in the converter where it is kept at the desired temperature, and the treatment is continued until the starch has been converted into soluble starch or into dextrin, as the case may be, which depends only on the temperature.

One can easily tell the instant when the conversion is finished by taking out samples, the starch dissolving when the treatment is terminated in boiling water, giving a clear fluid which gelatinizes on cooling.

When once the operation is finished, the contents of the converter 9 can be emptied by letting it pass by the traps 17 into the hopper 32 placed under the converter and from there into any suitable receivers.

The quantity of acid used can be determined and regulated by weighting the quantity contained in the flask 20 at the beginning and at the end, or at any given time during the conversion.

The invention is not limited to the use of the steam tubes described and represented, and any other suitable means for [fol. 313] heating the chamber and its contents may be used.

The length of time of the treatment beginning from the instant when the acid is introduced into the converter, with a constant temperature of 54° C. will be as an average from about two hours and a half to three hours.

For obtaining dextrin instead of soluble starch, one proceeds identically in the same manner, during the same lapse of time and using the same materials, but at a temperature of about 76°.

If one wishes, the soluble starch or dextrin obtained can be neutralized by means of an alkali, such as for instance, ammonia, and this treatment can be done in the converter itself, or in another apparatus; in most cases neutralization is not necessary.

Experience has shown that the use of hydrochloric acid was preferable on account of its modest price and of the ease of its manipulation; the invention, however, is not limited to the use of this acid but it can be replaced by

others, used always, either in the form of a gas, a vapor, or a fine spray, and it can be especially replaced by sulphuric acid, nitric acid, tartaric acid or citric acid.

It is preferable also to send the acid in a hot condition under form of vapor, or spray in the converter 9, although it is not necessary for obtaining the final result; the operation is, in the same way, facilitated and hastened if, before the admission of the acid vapor the starch is dried and heated in the manner indicated to the temperature of the reaction; but that is not necessary either.

In addition the invention is not limited to the use of the proportions of starch and acid mentioned above; it has been recognized, in fact, that even with a proportion of vapor, or of acid spray lower than that which has been indicated as an example, one could obtain the desired result, the length of time for the operation, being, it is true, longer in that case; one can also increase the proportion of acid but there is no advantage in doing so.

Finally it is not strictly limited to the adoption of the temperature which has been indicated, experience having shown that the present process allows soluble starch to be obtained by using the temperature between 21° and 65° C., although there is a tendency toward the formation of dextrine at temperatures higher than 54° C. In order to obtain the latter, it has been recognized that it is obtained easier between 76° and 93° and it could even be produced to a certain extent beyond these limits.

[fol. 314] Resume

To recapitulate, the invention concerns a process for the manufacture of soluble starch and dextrin, consisting chiefly in treating ordinary powdered starch by heating it and mixing it with a suitable acid in the state of vapor, gas or spray; the starch powder being preferably heated and dried before its treatment. The invention concerns the apparatus described above.

Society called: The Calico Printers Limited and M. M. Browning and Barlow.

By Proxy.

Charles Assi.

EXHIBITS IN EVIDENCE

OPINION—Filed July 6, 1921

The evidence in this case is substantially the same as that in the cases of Perkins Glue Company vs. Hood and Wright and The West Michigan Furniture Company heretofore heard and decided by this court. Indeed, for the most part, the record in the former cases has been "dumped" bodily into this one. Therefore, the decision and decrees in the earlier cases are controlling here. The only substantial difference between the former cases and the present one is found in the method of producing a part of the base used by the defendant, Holland Furniture Company, in the production of its glue. In the Hood and Wright and West Michigan Furniture Company cases the glue base used by the defendants was produced by the manufacturer by mixing commercial starches of different grades and kinds and so procuring a starch base of the required degree of degeneration. In the present case, a part of the glue base used by defendants has been produced in the same way and by the same manufacturer; but another part has been produced by another manufacturer by selecting a single grade and quality of commercial cas- [fol. 315] sava starch and merely sifting out the impurities therein contained. Manifestly the resultant glue base is the same whether consisting of a mixture of starches of different degrees of degeneration or of a single starch of the same degree of degeneration as the mixture. Defendant's final product is obtained by subjecting the glue base to the treatment described in the patent as the second or final step of the patented process and is identical with the glue of the patent; and while, probably, there is not such a complete independence of product and process in the product claims as is contended for by plaintiff, defendant, Holland Furniture Company, does so combine product and process in the preparation of its glue as to infringe the product claims of the patent.

In compliance with the promise made in its answer to one of the interrogatories propounded, defendant, Holland Furniture Company, furnished to plaintiff what is claimed to be a fair sample of the base used by it in the production of its glue. The sample of glue base so furnished has been

tested and analyzed by plaintiff's expert who testifies that the starch of which it is composed has been degenerated as required in the process claims of the patent. Testimony based upon an analysis of a single sample is not entirely satisfactory and ought not to be accepted as conclusive. If defendants' glue base consists of a starch which has been degenerated as described in the patent, the process claims declared upon are infringed. On the other hand, if the starch base has not been so degenerated, the process claims are not infringed. Further proof upon this question may be taken by either party upon the accounting.

A decree will be entered finding each of the claims declared upon valid and infringed by the Holland Furniture Company; granting an injunction; directing an accounting; and referring the case to John S. Lawrence, Master in Chancery, for such accounting. The evidence does not warrant a decree against the individual defendants and as to them the bill will be dismissed. Plaintiff will recover from the Holland Furniture Company its costs of suit to be taxed.

C. W. Sessions, District Judge.

Dated July 6, 1921.

[fol 316] Interlocutory Decree—Entered August 5, 1921, Sessions, J.

This cause came on to be heard at this term and was argued by counsel and thereupon upon consideration thereof it is

Ordered, Adjudged and Decreed as follows:

First. That Reissue Letters Patent of the United States No. 13436 dated July 2, 1912 were issued to the plaintiff Perkins Glue Company on an application filed by Frank G. Perkins and, as limited by the disclaimer duly filed in the U. S. Patent Office February 6, 1919, are good and valid in law and especially as to claims 13, 28, 30, 31 and 38 thereof.

Second. That said Frank G. Perkins was the true, original, sole and first inventer of the invention and improvements described and claimed in said Letters Patent as limited by said disclaimer; that the said invention and improvements were not known or used by others before his in-

vention thereof, and were not patented or described in any printed publication in this or any foreign country before his invention thereof, or more than two years prior to the date of his said application for patent therefor, that the same were not for more than two years prior to the date of his said application for patent therefor, in public use or on sale, that said Letters Patent fully describe the invention and were duly granted in accordance with the acts of Congress therefor made and provided:

Third. That the Perkins Glue Company, plaintiff herein is the sole and exclusive owner of said Reissue Letters Patent and of the inventions therein described and claimed as limited by said disclaimer and of *the* all the rights and privileges granted and secured thereunder, and also of all claims and demands whatsoever, arising from infringement of said Letters Patent; and that the title to said Letters Patent and to the aforesaid claims and demands is duly vested in the Perkins Glue Company, plaintiff herein;

Fourth. That the said Holland Furniture Company, defendant herein has infringed upon the exclusive rights secured to plaintiff by said Reissued Letters Patent 13,436, and especially as to claims 13, 28, 30, 31 and 38 thereof, by employing processes and making and using products which embody the invention and improvements described and claimed in said Letters Patent as limited by said disclaimer, all as charged in the plaintiff's bill of complaint herein; and it is further

[fol. 317] Ordered. Adjudged and Decreed,

That the plaintiff do recover from the Defendant Holland Furniture Company the gains, savings, profits and advantages which the said defendant has derived, received or made, or which have accrued to it from said infringement of said Reissued Letters Patent 13436, by employing processes and making, selling and using products in infringement of said Letters Patent, as aforesaid; and that said plaintiff do recover, in addition thereto any and all damages which the plaintiff has sustained by reason of all such infringements of its exclusive rights by said defendant, and it is further.

Ordered, Adjudged and Decreed

That it be referred to John S. Lawrence, one of the Masters of this Court, to ascertain, take, state and report to this Court on account of the products made, used or

sold by the said defendant, in infringement of said Letters Patent, and of the amount of such products which the defendant has on hand, and also of the gains, savings, profits and advantages which the said defendant has received or which has accrued to it, from *it* through the said infringements, and to assess the damages suffered by the plaintiff by reason of such infringements, and report to this Court with all convenient speed; and it is further

Ordered, Adjudged and Decreed that the Plaintiff on such accounting shall have the right to cause an examination of said defendants, or any of them, ore tenus or otherwise, and also the production of the books, vouchers, exhibits, statements and document- of said defendants, or any of them, as the said Master shall direct, and that the said defendants and each of them, attend for such purpose from time to time, as the said Master shall direct, and it is further

Ordered, Adjudged and Decreed that a perpetual injunction be issued out of and under the seal of this Court against the said defendant Holland Furniture Company enjoining and restricting it, and its officers, directors, servants, agents, attorneys, associates, successors, confederates, salesmen, workmen, and any person acting for or on behalf of said defendant, from using processes, and from making, using or selling products, in infringement of said Letters Patent as limited by said disclaimer and claimed in claims 13, 28, 30, 31 and 38 of said Letters Patent, or any of said claims, and from directing or contributing to or aiding or abetting any such infringement by others, and from in-
[fol. 318] fringing in any way upon said Letters Patent and it is further

Ordered, Adjudged and Decreed that the above-named plaintiff do recover from the said defendant, Holland Furniture Company, the costs including taxable charges and disbursements of this suit to be taxed, and that the plaintiff have execution against the said defendant therefor, and it is further

Ordered, Adjudged and Decreed that the bill of complaint herein be and the same hereby is dismissed as to the individual defendants, J. A. Vanderveen, Jacob Vanderveen, Dirk Vanderveen and Evart P. Stephan, without prejudice.

PETITION FOR APPEAL—Filed August 31, 1921

Holland Furniture Company, defendant in the above entitled cause, conceiving itself aggrieved by the decree made and entered in said cause on the 5th day of August, 1921, does hereby appeal from said decree to the United States Circuit Court of Appeals for the Sixth Circuit, for the reasons specified in the assignments of error which is filed herewith, and prays that the appeal may be allowed and that a transcript of the record and proceedings and papers upon which said decree was made, duly authenticated, may be sent to said Court of Appeals.

Holland Furniture Company, by Rector, Hibben, Davis & Macaulay, Travis, Merrick, Warner & Johnson, Solicitors for Defendant.

[fol. 319] ORDER ALLOWING APPEAL—Filed August 31, 1921

On motion of the solicitors for the defendant in the above entitled cause, Holland Furniture Company, it is ordered that the appeal of said defendant from the decree entered in said cause on the fifth day of August 1921, be and the same is hereby allowed upon the filing of a cost bond in the sum of Five Hundred Dollars ($500.00), to be approved by the Court.

C. W. Sessions, United States District Judge.

ASSIGNMENT OF ERRORS—Filed August 31, 1921

Now comes the Holland Furniture Company, defendant in the above entitled cause, and says that in the record and proceedings therein there is manifest error, and that the District Court of the United States for the Western District of Michigan erred in this, to wit:

1. In entering the decree entered in said cause upon the 5th day of August, 1921.

2. In decreeing any relief to the plaintiff against the defendant, Holland Furniture Company, and in not dismissing the bill of complaint.

3. In decreeing that reissue letters patent of the United States No. 13436, dated July 2nd, 1912, as limited by the dis-

claimer filed in the United State Patent Office February 6th, 1919, are good and valid in law, and especially as to claims 13, 28, 30, 31, and 38 thereof, or as to any of the claims.

4. In not decreeing that said reissue letters patent are invalid and void as to said claims 13, 28, 30, 31 and 38 thereof, and as to each of said claims.

5. In decreeing that Frank G. Perkins was the true, original, sole and first inventor of the invention and improvements described and claimed in said Letters Patent as limited by said disclaimer; that the said invention and improvements were not known or used by others before his invention thereof, and were not patented or described in [fol. 320] any printed publication in this or any foreign country before his invention thereof, or more than two years prior to the date of his said application for patent therefor, that the same were not for more than two years prior to the date of his said application for patent therefor, in public use or on sale, that said Letters Patent fully describe the invention and were duly granted in accordance with the acts of Congress therefor made and provided; and in not decreeing that said Letters Patent were invalid and void because the said Frank G. Perkins was not the true, original, sole and first inventor of the invention and improvements described and claimed in said Letters Patent as limited by said disclaimer, and because said invention and improvements were known and used by others in this country before his invention thereof, and were patented and described in printed publications in this and foreign countries before his invention thereof and for more than two years prior to the date of his said application for patent therefor, and because said alleged invention and improvement had been in public use and on sale in this country for more than two years prior to the date of his said application for patent therefor, and because said Letters Patent failed to fully describe the said alleged invention and improvements and were not duly granted in accordance with the Acts of Congress therefor made and provided and because said alleged invention and improvements did not constitute a patentable invention or the subject-matter of a valid patent at the time of the alleged invention thereof by the said Perkins.

6. In decreeing that the said defendant, Holland Furniture Company, has infringed upon the exclusive rights secured to said plaintiff by the said Reissued Letters Patent No. 13436, especially as to claims 13, 28, 30, 31 and 36 thereof, or any — said claims, by employing processes and making and using products which embody the invention and improvements described and claimed in said Letters Patent as limited by said disclaimer; and in not decreeing that the processes employed by said defendant and the products made and used by it do not embody the invention and improvements described in said Letters Patent as limited by said disclaimer, and do not infringe any valid claim of said Letters Patent.

7. In decreeing that the plaintiff do recover from the defendant, Holland Furniture Company, the gains, savings, profits, and the advantages which the said defendant has derived, received and made, or which have accrued to it from said infringement of said Reissue Letters Patent 13,-[fol. 321] 436 by employing processes and making, selling and using products in infringement of said Letters Patent; and that said plaintiff do recover, in addition thereto any and all damages which the plaintiff has sustained by reason of such alleged infringements of its exclusive rights by the said defendant.

8. In referring *to* said cause to John S. Lawrence, one of the Masters of this Court, to ascertain, take, state and report to this Court an account of the products made, used or sold by the said defendant, in infringement of said Letters Patent, and of the amount of such products which the defendant has on hand, and also of the gains, savings, profits, and advantages which the said defendant has received or which has accrued to it, from or through the said infringements, and to assess the damages suffered by the plaintiff by reason of such infringements, and report to this court with all convenient speed; and that plaintiff on such counting shall have the right to cause an examination of said defendants, or any of them, ore tenus or otherwise, and also the production of the books, vouchers, exhibits, statements, and documents of said defendants, or any of them as the said Master shall direct, and that the said defendants and each of them, attend for such purpose from time to time, as the said Master shall direct.

9. In decreeing that a perpetual injunction be issued out of and under the seal of this Court against the said defendant, Holland Furniture Company, enjoining and restraining it, and its officers, directors, servants, agents, attorneys, associates, successors, confederates, salesmen, workmen and any person acting for or on behalf of said defendant, from using processes, and from making, using or selling products, in infringement of said Letters Patent as limited by said disclaimer and claimed in claims 13, 28, 30, 31 and 38, of said Letters Patent, or any of said claims, and from directing or contributing to or aiding or abetting any such infringement by others, and from infringing in any way upon said Letters Patent.

10. In decreeing that plaintiff do recover from said defendant, Holland Furniture Company, the costs including the taxable charges and disbursements of this suit to be taxed and that the plaintiff have execution against the said defendant therefor.

Holland Furniture Company, by Rector, Hibben, Davis & Macaulay, Travis, Merrick, Warner & Johnson, the Defendant's Solicitors.

[fol. 322] PETITION FOR REHEARING—Filed January 31, 1918

IN THE UNITED STATES CIRCUIT COURT OF APPEALS FOR THE SEVENTH CIRCUIT

Appeal from the District Court of the United States for the Northern District of Illinois, Eastern Division

SOLVA WATERPROOF GLUE COMPANY et al., Appellants,

vs.

PERKINS GLUE COMPANY, Appellee

To the Honorable the Judges of the United States Circuit Court of Appeals for the Seventh Circuit:

Your petitioners, Solva Waterproof Glue Company, Lowell R. Burch and Thomas B. Kane, appellants-defendants in the above entitled cause, respectively petition this Honorable Court and pray for a rehearing of the appeal herein for the purpose only of more definitely indicating

the extent to which the decree of the District Court is sustained.

Your petitioners fear that in the further proceedings in accordance with the opinion confusion may arise in connection with that part of the final paragraph of the opinion sustaining the claims relating to the "final process and the resultant product." While it is our understanding that the "final process" to which reference is here made is the complete refined process as finally adopted and described in claims 7 and 9 quoted in the opinion, we have reason to believe that a different interpretation is entertained by complainant-appellee, as evidenced by the circular, a copy of which is printed herewith, and which we are informed and believe was distributed broadcast to the veneering and paper trades. Furthermore, the only claim of those before the court on appeal which relates to a product other than the glue base and which therefore can be contemplated as for the "resultant product" of the final process, is claim 28 of the said patent, and is as follows:

"28. A glue comprising cassava carbohydrate rendered semi-fluid by direction and having substantially the properties of animal glue."

This claim by reason of its indefiniteness is possibly susceptible of interpretation either as covering the product of the second step alone, under which construction it could not be sustained in view of the invalidity of the claims to [fol. 323] the second step, or as covering the product of the two successive steps set forth in claims 9 and 10 of the alkali patent.

It is therefore respectfully requested that the opinion of the Court be more definitely indicated in respect to the claims sustained.

Respectfully submitted.

Solva Waterproof Glue Company, Lowell R. Burch, Thomas B. Kane, Petitioners, by John B. Macauley, Livingston Gifford, Their Counsel.

I hereby certify that in my opinion the foregoing petition for rehearing is well founded in point of law and should be granted, and is not interposed for purposes of delay.

John B. Macauley, of Counsel for Petitioners.

[fol. 324] PLAINTIFF'S CIRCULAR

The Perkins Glue Patent Sustained on Appeal

The United States Circuit Court of Appeals in Chicago has just handed down an opinion in the case brought by the Perkins Glue Company against the Solva Waterproof Glue Co., the Burch-Kane Company, Lowell R. Burch and Thomas B. Kane, for infringement of Perkins re-issue Patent No. 13,436 and Perkins Patent No. 1,020,655, in which the Court of Appeals finds that the Perkins Glue and the process of making it was new, and that the patents are valid and have been infringed by the defendants.

The case was originally decided by the District Court in favor of the Perkins Glue Company in June, 1915. An appeal was taken which was argued in January, 1917, and has just been decided. The Court of Appeals criticises some of the ways of claiming the invention that were brought before it, and reverses the lower court as to them, but it sustains as valid and infringed the claims for the Perkins glue as a product and for the process by which the Perkins glue is made.

The Court held that Solva Waterproof Glue Co., the Burch-Kane Company and Burch and Kane had infringed although they had merely sold the dry glue material and left their customers to make it up into Perkins glue.

The decision makes it clear also that the manufacturer who mixes up such dry glue material into Perkins glue and uses it is liable as an infringer.

The existing injunction against the Solva Waterproof Glue Co., the Burch-Kane Company, Lowell R. Burch and Thos. B. Kane is by this decision of the Circuit Court of Appeals continued and made perpetual, and their customers who have bought such dry glue material from them and mixed it up into Perkins Glue and used the glue, are equally infringers and will have to settle with the Perkins Glue Company for past infringement and absolutely discontinued all future infringement or stand suit.

All infringers of the Perkins patents are hereby notified of this final decision in its favor and are further notified that all infringements must be settled for and cease.

The following are excerpts from U. S. Circuit Court of Appeals opinion filed January 2, 1918, in Perkins Glue Com-

pany vs. Solva Waterproof Glue Co., Burch-Kane Company, Lowell R. Burch and Thomas B. Kane, brought for infringement of Perkins re-issue Patent No. 13,436 and Perkins Patent No. 1,020,655.

[fol. 325] Before Kohlsaat, Altschuler, and Evans, Circuit Judges

Kohlsaat, Circuit Judge, delivered the opinion:

"The question is thus narrowed to the following propositions: (1) Was the glue of the patents new? (2) Does the process constitute a valid invention?

It is true (1) that the adhesive of the prior art patents, although adverted to in those patents as glue, was never placed on the market as a substitute for animal glue or otherwise: (2) that prior to the patents in suit, while its location on the line of starch adhesive products was pointed out, nobody actually rescued the glue of the patents from its undeveloped state.

From the evidence it appears that there was a demand on the market for starch glue as good as animal glue and suitable for veneering, and that appellee had built up a large business in that article; that the claims of the prior art patents, except the Brueder French Patent, No. 114,978, aforesaid, all were in fact limited to pastes, sizings, mucilage and other weaker forms of adhesives; that appellee's process was not so evident as to be discovered by appellants without subsidizing appellee's employees; that there seems to have been great difficulty in getting at the correct formula; that Perkins labored years to get the latter just right; that, as stated by his expert, Carmichael, 'He proportioned the various steps to one another according to the selection of raw material, in the conversion of the raw material and in the solution of the material, being particular about the various sub-steps by which, in the main step effecting the solution, he obtained a uniform and homogeneous product.' All these, considered in connection with the presumption arising from the grant of the patent, lead us to hold though with some hesitation that the claims covering the finished glue product as well as the process claims for that article are valid and should be sustained."

* * * * * * *

"Can a manufacturer, by producing a glue base under the conditions of this case, which is not an invention but which may be used, and some of which, the Court finds from the evidence, is intended to be used in a process which is not in itself, but only in combination entitled to patent protection, be decreed guilty of contributory infringement, notwithstanding no attempt is made by the alleged contributory infringer to so use the final step himself, and which glue base can be and is sometimes used to manufacture other commercial adhesives than glue, though appellee uses it for making glue only? We think so, and hold that appel- [fol. 326] lant, the Solva Glue Manufacturing Company, was a contributory infringer of the final product and of the final process. The rule of law in such case is that one who makes and sells one element of a patented combination with the intention and for the purpose of bringing about its use in such a combination, is guilty of contributory infringement, and is equally liable with him who organizes the complete combination.

Thompson-Houston Electric Co. vs. Ohio Brass Co. et al., 80 Fed., 712, citing many cases."

Perkins Glue Company, Patentees of Perkins Vegetable Glue, South Bend, Indiana, Lansdale, Pennsylvania.

Appellee's Reply to Appellants' Petition for Rehearing

In the United States Circuit Court of Appeals for the Seventh Circuit

No. 2327

Solva Waterproof Glue Company et al., Appellants,

vs.

Perkins Glue Company, Appellee

Appeal from the District Court of the United States for the Northern District of Illinois, Eastern Division

The appellee respectfully replies to appellants' petition for a hearing of the appeal herein and says as follows:

The rehearing sought is stated to be

"for the purpose only of more definitely indicating the extent to which the decree of the District Court is sustained,"

[fol. 327] the petitioners fearing that

"in the further proceedings in accordance with the opinion confusion may arise in connection with that part of the final paragraph of the opinion sustaining the claims relating to the 'final process and resultant product,' "

and petitioners therefore request

"that the opinion of the Court be more definitely indicated in respect to the claims sustained."

The opinion of the Court and the concluding direction for the mandate are clear and definite.

The latter is as follows:

"The decree of the District Court sustaining the claims for a glue base process and product and for the so-called second step as such is reversed, and that part of it which upholds the claims of the patents for the final process and the resultant product respectively is affirmed with direction to the District Court to proceed further in accordance herewith."

The opinion in conclusion of the discussion of validity says (bottom of page 11):

"All these, considered in connection with the presumption arising from the grant of the patent, lead us to hold, though with some hesitation, that the claims covering the finished glue product as well as the process claims for that article are valid and should be sustained."

The opinion makes it clear that Perkins discovered that a starch previously suitably degenerated could be subsequently dissolved with a solvent of starch and three parts or less of water and make the glue the patents describe, and that that constituted a proper basis for process and product claims, the process requiring both the previous degeneration and the subsequent dissolving operation and the product being the resulting "starch glue as good as animal glue and suitable for veneering"; and that the defendants by selling to others the suitably degenerated starch, adapted

by its previous treatment and intended by the defendants on such sales, to be treated by others to make glue with a solvent of starch and three parts or less of water, were [fol. 328] guilty of contributory infringement.

A mandate in the terms of the concluding paragraph of the opinion, in the usual way, would be fairer to the plaintiff-appellee than a mandate specifying claims by number, for the reason that the claims at issue in the case (as appears on page 78 of the Record, fol. 555) were more numerous than those specified in the decree of the Court below (Record, page 1130, fol. 1734) where the District Court seems to have selected an example or two of each class. If any specifying of numbers is to occur all of the claims in issue should be specified either as valid or as invalid, and this should certainly include as valid claims 19, 20, 28, 30, 31, 32 and 37 of the re-issued Letters Patent No. 13,436 and claims 6, 7 and 9 of Letters Patent No. 1,020,656.

Referring to claim 28 of the Reissue patent 13,346 (which petitioners incorrectly quote), petitioners say:

"this claim by reason of its indefiniteness is possibly susceptible of interpretation either as covering the product of the second step alone, under which construction it could not be sustained in view of the invalidity of the claims to the second step, or as covering the product of the two successive steps set forth in claims 9 and 10 of the alkali patent" [undoubtedly meaning claims 7 and 9].

Petitioners point out no indefinite language in claim 28.

They seem to be asking the Court to hold that claim 28 covers only such glue as is made according to the alkali patent No. 1,020,656.

But claim 28 is one of the claims of the first and broader acid patent, Reissue, No. 13,436, and, of course, covers glue made from starch degenerated by the acid process as well as by the alkali process.

Petitioners say (page 1):

"It is our understanding that the 'final process' to which reference is here made is the complete refined process as finally adopted and as described in claims 7 and 9 quoted in the opinion."

But this is clearly and sufficiently negatived in the opinion.

The glue the Court defines (page 11) as a

[fol. 329] "starch glue as good as animal glue and suitable for veneering,"

and (page 3) the Court refers to the final glue claims as

"for a veneer glue as good or better than animal glue,"

and on page 11, the Court after referring to the glue base as old, says:

"To this appellee adds a second step for the purpose of throwing the base into solution—three or preferably less parts of water and a solvent to one part of glue base, which results in a deliverance of good as animal glue, from starch base, a process which the appellants employed surreptitious means to discover. If the glue and its production from the base were just at hand, why this underhand invasion?"

The opinion points out in the middle of page 6 that the glue base of the patents may be obtained in a variety of ways. Such a base and the process of making it, after being given a broad construction by the Court, is found to be old, and the Court also says the second step is not new or patentable "as such"; but the combination of the two operations in related succession to produce the goods as animal glue suitable for veneering the Court finds to be new and patentable as a process, and the resulting finished glue the Court finds to be new and patentable as a product.

As the opinion plainly indicates, the final glue product may be made by suitably treating a suitable base, whether previously degenerated by the alkali treatment, or by the acid treatment, or obtained by intermixture, or simply found in the market—provided only that that base is in the proper state or condition of degeneration when treated to make this final glue product.

The Court evidently felt that the "second step alone" or the "second step as such" might produce other products than the "starch glue as good as animal glue and suitable for veneering" covered by claim 28 and others (as if, for example, applied to the under degenerated starch, such as raw starch, or to an over degenerated starch, such as dextrine) and therefore held that the claims for the "second step as such" were invalid. But the Court makes it clear

that the patent covers the product of the second step when the second step is applied to a base previously suitably [fol. 330] converted by an earlier operation to the proper slight degree of degeneration to produce in the end the starch glue as good as animal glue and suitable for veneering.

The Perkins Glue Company trade circular given in extenso in the petition accurately states the facts as to the decision, though in non-technical language, and does not evidence uncertainty or ambiguity in any respect in the opinion or in the direction for mandate.

We submit that as to the questions raised in the petition for rehearing, the opinion of the Court is clear and certain, and requires no further amplification or definition, and that the petition for rehearing should be denied.

Respectfully submitted.

Perkins Glue Company, Appellee, by Wm. Houston Kenyon, Gorham Crosby, Kenyon & Kenyon, New York, N. Y., of Counsel for Appellee. Brown, Hanson & Boettcher, Chicago, Ill., Solicitors for Appellee.

[fol. 331] In the United States Circuit Court of Appeals for the Seventh Circuit

Solva Waterproof Glue Company et al., Appellants,

vs.

Perkins Glue Company, Appellee

Appeal from the District Court of the United States for the Northern District of Illinois, Eastern Division

Docket Entry

Petition for rehearing denied. (No opinion.)
March 11, 1918.

[fol. 332] MANDATE

UNITED STATES OF AMERICA, ss:

The President of the United States of America to the Honorable the Judges of the District Court of the United States for the Northern District of Illinois, Eastern Division, Greeting:

Whereas, lately in the District Court of the United States for the Northern District of Illinois, before you, or some of you, in the cause between Perkins Glue Company and Solva Waterproof Glue Company, Burch-Kane Company, Lowell R. Burch and Thomas B. Kane, the Decree entered on the third day of August, 1915, is in the words and figures following, to wit:

This cause came on to be heard at this term and was argued by counsel and thereupon, upon consideration thereof it is Ordered, Adjudged and Decreed as follows:

First. That reissue letters patent of the United States No. 13,436 dated July 2, 1912, and original letters patent of the United States No. 1,020,656, dated March 19, 1912, were issued to the plaintiff, Perkins Glue Company on applications filed by Frank G. Perkins, and are good and valid in law, and especially as to claims 13, 16, 19, 24, 28, and 38 of said reissue patent No. 13,436 and claims 2, 6, 7 and 9 of said original letters patent No. 1,020,656.

Second. That the said Frank G. Perkins was the true, original, sole and first inventor of the inventions and improvements described and claimed in said letters patent; that the said inventions were not known or used by others before his invention thereof, and were not patented or described or shown in any printed publication in this or any foreign country before his invention thereof, or more than two years prior to the date of his applications, for patents therefor; that the same were not for more than two years prior to the date of his applications for patents therefor, in public use or on sale; that the said letters patent fully describe the invention and were duly granted in accordance with the Acts of Congress therefor made and provided:

Third. That the Perkins Glue Company, plaintiff therein, is the sole and exclusive owner of said reissue letters patent No. 13,436, and original letters patent No. 1,020,656,

and of the inventions therein described and claimed and [fol. 333] of all the rights and priveleges granted and secured thereunder, and also of all claims and demands whatsoever arising from infringement of said letters patent; and that the title to said letters patent and to the aforesaid, claims and demands is duly vested in the Perkins Glue Company, the plaintiff herein.

Fourth. That the said Solva Waterproof Glue Company and Burch-Kane Company, defendants herein, have infringed upon the exclusive rights secured to the plaintiff by said reissued letters patent No. 13,436, and by said original letters patent No. 1,020,656, and especially as to said claims 13, 16, 19, 24, 28 and 38 of said reissue letters patent No. 13,436 and as to said claims 2, 6, 7 and 9 of said original letters patent No. 1,020,656 by employing processes and making and selling products which embody the inventions described and claimed in said letters patent, and by selling to others products to be used in infringement of said letters patent and by directing and contributing to such infringing use of such products by others, and by directing and contributing to the employment by others of processes which embody the inventions described and claimed in said letters patent, all as charged in the plaintiff's bill of complaint herein; and it is further

Ordered, Adjudged and Decreed that the plaintiff do recover from the defendants Solva Waterproof Glue Company and Burch-Kane Company, the gains, profits and advantages which the said defendants, or any of them, have derived, received or made, or which have arisen or accrued to them, or any of them, from the said infringement of said reissue letters patent No. 13,436 and said original letters patent No. 1,020,656, by employing processes and making and selling products described and claimed in said letters patent, and by selling to others products to be used in infringement of said letters patent as described and claimed in said letters patent and particularly in claims 13, 16, 19, 24, 28 and 38 of said reissue letters patent No. 13,436 and claims 2, 6, 7 and 9 of said original letters patent No. 1,020,656 and by contributing to the infringement of said letters patent by others, and that said plaintiff do recover, in addition thereto any and all damages which plaintiff has sustained by reason of all such infringements of its exclusive

rights by the said defendants or any of them; and it is further Ordered, Adjudged and Decreed that it be referred to Charles B. Morrison, one of the masters of this court, to ascertain, take, state and report to this Court an account of the products made, used or sold by the defendants or [fol. 334] any of them, in infringement of said letters patent and of either of them, and of the amount of such products which the defendants or any of them, have on hand, and also of the gains, profits and advantages which the said defendants, or any of them have received or which have accrued to them, or any of them, from or through the said infringements and to assess the damages suffered by the plaintiff by reason of such infringements, and report to this Court with all convenient speed, and it is further

Ordered, Adjudged and Decreed that the plaintiff on such accounting shall have the right to cause an examination of said defendants or any of them, ore tenus or otherwise, and also the production of the books, vouchers, exhibits, statements and documents of said defendants, or any of them, as the said Master may direct, and that the said defendants and each of them, attend for such purpose from time to time, as the said Master shall direct, and it is further

Ordered, Adjudged and Decreed that a perpetual injunction be issued out of and under the seal of this Court against the said defendants, Solva Waterproof Glue Company, Burch-Kane Company, Lowell R. Burch and Thomas B. Kane, enjoining and restraining them and each of them and their officers, directors, servants, agents, attorneys, associates, successors, confederates, salesmen, workmen, and any person acting for or on behalf of said defendants, from using processes, and from making or selling products, and from selling to others products to be used, in infringement of said letters patent, as described and claimed in claims 13, 16, 19, 24, 28 and 38 of said reissue letters patent No. 13,463 and claims 2, 6, 7 and 9 of said original letters patent No. 1,020,656, or any of said claims, and from directing or contributing to or aiding or abetting any such infringement by others, and from infringing in any way upon said letters patent, or either of them, and it is further

Ordered, Adjudged and Decreed that the above named plaintiff do recover from the said defendants the cost includ-

ing taxable charges and disbursements of this suit to be taxed, and that the plaintiff have execution against the defendants therefor, as by the inspection of the transcript of the record of the said District Court which was brought into the United States Circuit Court of Appeals for the Seventh Circuit by virtue of an appeal agreeably to the act of Congress in such case made and provided, fully and at large appears.

[fol. 335] And Whereas, in the term of October, in the year of our Lord one thousand nine hundred and sixteen the said cause came on to be heard before the said United States Circuit Court of Appeals for the Seventh Circuit, on the said transcript of record, and was argued by counsel:

On Consideration Whereof, It is now here ordered, adjudged and decreed by this Court that the part of the decree of the said District Court in this cause which upholds the claims of the patents for the final process and the resultant product respectively, be and the same is hereby affirmed.

And it is further ordered, adjudged and decreed by this Court that the part of the said decree of the said District Court sustaining the claims for a glue base process and product and for the so called second step, as such be, and the same is hereby reversed, and that this cause be, and the same is hereby remanded to the said District Court with direction to proceed further in accordance with the opinion of this Court.

And it is further ordered that neither party recover any costs either in this Court or in the said District Court, and that each of the said parties pay their own costs in this Court and in the said District Court.

Thursday, May 2, 1918.

You, therefore, are hereby commanded that such further proceedings be had in said cause as according to right and justice, and the laws of the United States, ought to be had, the said decree notwithstanding.

Witness the Honorable Edward D. White, Chief Justice of the United States the sixth day of May in the year of our Lord one thousand nine hundred and eighteen.

Edward M. Holloway, Clerk of the United States Circuit Court of Appeals for the Seventh Circuit.

[fol. 336] DEFENDANT'S EXHIBIT D-D

UNITED STATES DISTRICT COURT, NORTHERN DISTRICT OF ILLINOIS, EASTERN DIVISION

No. 127

PERKINS GLUE COMPANY

vs.

SOLVA WATERPROOF GLUE COMPANY et al.

Memorandum for Final Decree

An accounting having been waived by stipulation of the parties, the case is now ready for a final decree upon the mandate of the Circuit Court of Appeals, on the appeal from the decree for the injunction. The opinion of the Court of Appeals is said by counsel for all parties to be perfectly clear, but they differ radically as to its meaning, and submit totally different forms of decrees. The opinion of Judge Kohlsaat requires very careful study, as well as the patents, and even then the opinion is obscure, and another appeal may be necessary to fully determine its meaning. To the best of my ability I will endeavor to state that meaning as I understand it.

The first process or step of the patents is for the purpose of creating a suitable starch base, and then applying to that base the second step, in order to produce the final product, or starch glue. These are the only steps or processes described, and they may be taken singly or together. Both are old and unpatentable when taken separately, but when joined together to produce starch glue which has the properties described by Mr. Perkins, and which is as good or better than animal glue, they are new and make patentable subject matter, both as a process and as producing a patentable product consisting of glue. Glue made in the manner described in the patents, and having the characteristics there defined is also a patentable product. The glue-base is not such a product because it is not only found in a natural state, but was made by prior inventors as a base for mucilage as well as a glue produced by a different second step. The first step designed to

produce the glue base, is therefor old and necessarily unpatentable, hence the base itself must be equally impossible of patent protection. But as the second step, when applied to a suitable glue-base and with the result described, pro-[fol. 337] duces a patentable product, why does the appellate court decide it to contain nothing new, when considered alone and by itself? This is not explained in the opinion, and the remaning must be gathered from the context. The Court says:

"Some of the claims in suit cover the process and product of the so-called first step, or glue base of the patent. Others cover the process of the so-called second step of the patent, while others cover the process and product of the complete processes and product of the patent.

The decree of the district court sustaining the claims for a glue base process and product and for the so-called second step as such is reversed, and that part of it which upholds the claims of the patents for the final process and the resultant product respectively is affirmed, with direction to the district court to proceed further in accordance herewith."

Quoting from and approving defendant's argument in the opinion it is said:

"We find in a single prior art patent the preparation of the identical glue base or material by degenerating starch to the same point to which defendant's material is modified, by the same reagents and by the same method. This material, as stated by the patent, was put upon the market in the same form that defendant's material is put upon the market and was sold, to be dissolved by the user in a solvent containing the same aqueous solution, of the same reagent, of the same concentration as defendant's customers employ. The only difference between the process of this particular patent and the practice of defendant is in the use to which the glue material is put and the consequent difference of dilution of the solution thereof. The patentee refers to the use of his adhesive for dressing of finishing, i. e., sizing or stiffening fabrics, while defendant and its customers employ the material for sticking veneer layers together. Therefore, the prior art patentee uses

and describes a relatively dilute solution, while the defendant employs a relatively heavy solution, just as the more familiar adhesive animal glue, is used in dilute solution for sizing, etc., and in heavy solution as a glue for veneer, etc. No other difference exists. It is the defendants' view that this difference is an immaterial one, especially in view of [fol. 338] the fact that similarly modified starch had been dissolved in aqueous solution in substantially the same proportion of starch to solvent employed by defendant, to make a glue for the same purpose as that for which defendants' glue is employed, to wit, to glue wood together, and otherwise as a substitute, for animal glue."

After explaining that the starch procured on the market is in different degrees of degeneration, and that experiment is necessary to form the glue base, the Court say that the most satisfactory way of finding out whether the base is suitable is to apply the second step of the patents, and if the result is the veneer glue, then the operator has guessed right, but if it is not up to standard further treatment must be applied. Then the conclusion is reached that as the proper glue-base must be discovered anew on each occasion, both the claims for the base, and the process for its production, are invalid.

The Court say:

"Here we have a glue-base which the court finds to be old. To this appellee adds a second step for the purpose of throwing the base into solution—three or preferably less parts of water and a solvent to one part of glue base, which results in a deliverance of good as animal glue, from starch base, a process which appellants employed surreptitious means to discover. If the glue and its production from the base were just at hand, why this underhand invasion? There was nothing new in the second step."

"From the evidence it appears that there was a demand on the market for starch glue as good as animal glue and suitable for veneering, and that appellee had built up a large business in that article; that the claims of the prior art patents, except the Brueder French patent, No. 114,978, aforesaid, all were in fact limited to pastes, sizings, mucilage and other weaker forms of adhesives; that appellee's

process was not so evident as to be discovered by appellants without subsidizing appellee's employees; that there seems to have been great difficulty in getting at the correct formula; that Perkins labored years to get the latter just right; that, as stated by his expert, Carmichael, 'He proportioned the various steps to one another according to the selection of raw material, in the conversion of the raw ma- [fol. 339] terial and in the solution of the material, being particular about the various sub-steps by which, in the main step effecting the solution, he obtained a uniform and homogeneous product.' All these, considered in connection with the presumption arising from the grant of the patent, lead us to hold, though with some hesitation, that the claims covering the finished glue product as well as the process claims for that article are valid and should be sustained."

And in discussing the question of contributory infringement it is said:

"Can a manufacturer, by producing a glue base under the conditions of this case, which is not an invention, but which may be used, and some of which, the court finds from the evidence, is intended to be used in a process which is not in itself, but only in combination entitled to patent protection, be decreed guilty of contributory infringement, notwithstanding no attempt is made by the alleged contributory infringer to so use the final step himself, and which glue base can be and is sometimes used to manufacture other commercial adhesives than glue, though appellee uses it for making glue only? We think so, and hold that appellant, the Solva Glue Mfg. Co., was a contributory infringer of the final product and of the final process."

From these quotations it seems probable that the appellate court intended to sustain only those claims of the patent which include only the two steps, and only when their use results in the Perkins glue, together with those additional claims which count on such glue as a product of the two steps, and no others.

The result of the foregoing is that the argument of counsel for defendants is adopted so far as the construction of the decree is concerned, and that of plaintiff's counsel rejected.

In respect to including claims in the final decree which did not appear in the interlocutory decree, I do not adopt

the argument of the defendants' counsel. I think the principles stated by the appellate court should be carried into the decree without regard to the particular claims referred to in the decree appealed from.

August 5, 1918.

A. L. Sanborn, Judge.

[fol. 340] DEFENDANTS' EXHIBIT C-C

At a stated term of the District Court of the United States for the Northern District of Illinois, Eastern Division, held at the city of Chicago on the — day of May, 1918.

Present: Honorable A. L. Sanborn, District Judge.

In Equity. No. 127

PERKINS GLUE COMPANY, Plaintiff,

vs.

SOLVA WATERPROOF GLUE COMPANY, BURCH-KANE COMPANY, LOWELL R. BURCH, and THOMAS B. KANE, Defendants

Final Decree

This cause having come on to be heard on the pleadings and proofs, including the statement of claims relied upon by the plaintiff under the pleadings and having been argued by counsel, and having been considered and decided by this Court and a decree entered on the third day of August, 1915, and an appeal having been taken to the United States Circuit Court of Appeals for the Seventh Circuit, and said appeal having been heard and decided and the said United States Circuit Court of Appeals for the Seventh Circuit having directed, as appears by its opinion filed in said Court, that the aforesaid decree of this Court be modified as stated in said opinion and with direction to this Court to proceed further in accordance therewith, and the said United States Circuit Court of Appeals for the Seventh Circuit having by its mandate dated the sixth day of May, 1918, and filed in this Court, remanded the cause to this Court with directions to proceed further in accordance with its opinion above referred to.

Now, Therefore, after hearing counsel for the respective parties, and upon filing of a stipulation dated May 2, 1918, between the solicitors for the respective parties waiving an accounting of profits and damages and any award of costs in favor of either party, it is

Ordered, Adjudged and Decreed as follows:

First. That re-issue letters patent of the United States No. 13,436, re-issued July 2, 1912, and letters patent of the United States No. 1,020,656, patented March 19, 1912, were [fol. 341] issued to the plaintiff, Perkins Glue Company, on applications filed by Frank G. Perkins and are good and valid in law as to claims 19, 20, 28, 30, 31, 32 and 37 of said re-issued patent No. 13,436 and as to claims 6, 7 and 9 of letters patent No. 1,020,656.

Second. That the said Frank G. Perkins was the true, original, sole and first inventor of the inventions and improvements described in said letters patent and claimed in said claims thereof; that the said inventions were not known or used by others before his invention thereof, and were not patented or described or shown in any printed publication in this or any foreign country before his invention thereof, or more than two years prior to the date of his applications for patent therefor, that the same were not for more than two years prior to the date of his applications for patents therefor, in public use or on sale; that the said letters patent fully describe the said inventions and were duly granted in accordance with the Acts of Congress therefor made and provided.

Third. That the Perkins Glue Company, plaintiff herein, is the sole and exclusive owner of the said reissued patent No. 13,436 and original letters patent No. 1,020,656 and of the said inventions therein described and claimed, and all of the rights and privileges granted and accrued thereunder, and also of all claims and demands whatsoever arising from infringement of said letters patent; and that the title to said letters patent and to the aforesaid claims and demands is duly vested in the Perkins Glue Company, the plaintiff herein.

Fourth. That the Solva Waterproof Glue Company, and Burch-Kane Company, defendants herein, have infringed upon the exclusive rights secured to the plaintiff by said reissued letters patent No. 13,436 and by said letters patent

No. 1,020,656, by selling to others glue base material intended by said defendants on such sales to be treated by others to make glue, all in infringement of said letters patent and especially claims 19, 20, 28, 30, 31, 32 and 37 of said re-issued letters patent No. 13,436 and claims 6, 7, and 9 of said letters patent No. 1,020,656 and thereby contributing to such infringement, all as charged in the plaintiff's bill of complaint herein: and it is further

Ordered, Adjudged and Decreed that a perpetual injunction be issued out of and under the seal of this Court against the defendants, Solva Waterproof Glue Company, Burch-Kane Company, Lowell R. Burch and Thomas B. Kane enjoining and restraining them, and each of them and their officers, directors, servants, agents, attorneys, associates, [fol. 342] successors, confederates, salesmen, workmen from selling to others glue base material intended to be treated by others to make glue in infringement of said letters patent, and especially claims 19, 20, 28, 30, 31, 32 and 37 of said re-issued letters patent No. 13,436 and claims 6, 7 and 9 of said letters patent No. 1,020,656 or any of said claims, and from infringing in any way upon said letters patent, or either of them, and from directing or contributing to or aiding or abetting any such infringement; and it is further

Ordered, Adjudged and Decreed that said re-issued letters patent No. 13,436 are invalid as to claims 11, 13, 16, and 24 and 38, and that letters patent No. 1,020,656 are invalid as to claims 1, 2 and 3: and it is further

Ordered, Adjudged and Decreed that the interlocutory decree herein of August 3, 1915, be and the same hereby is vacated and set aside (1) in so far as it holds valid and infringed claims 11, 13, 16 and 24 and 38 of said re-issued letters patent No. 13,436 and claims 1, 2 and 3 of said letters patent No. 1,020,656, (2) in so far as it ordered adjudged and decreed that the plaintiff recover from the defendants any gains, profits or advantages derived, received or made by them or which have arisen or accrued to them by reason of their infringement of said reissued letters patent 13,436 and letters patent 1,020,656, (3) in so far as it ordered, adjudged and decreed that the plaintiff recover from the defendants any damages which plaintiff has sustained by reason of such infringement, (4) in so far as it ordered, adjudged and decreed that it be referred to a master to as-

certain, take, state and report to this Court an account of the products made, used or sold by the defendants in infringement of said letters patent, and of the amount of such products which the defendants have on hand, and also of said gains, profits and advantages, and to assess said damages, (5) in so far as it ordered, adjudged and decreed the attendance and examination of said defendants and the production of exhibits on said accounting, (6) in so far as it ordered, adjudged and decreed that a perpetual injunction be issued against the said defendants and others enjoining and restraining them from infringing claims 11, 13, 16 an 24 and 38 of said reissued letters patent and claims 1, 2 and 3 of said letters patent 1,020,656, and (7) in so far as it ordered, adjudged and decreed that the plaintiff recover costs from the defendants and have execution against the defendants therefor; but it is

[fol. 343] Ordered, Adjudged and Decreed that in so far as said interlocutory decree adjudged and decreed claims 19, 20, 28, 30, 31, 32 and 37 of said reissued patent 13,436 and claims 6, 7 and 9 of said letters patent 1,020,656 to be good and valid and infringed by the defendants and in so far as it ordered, adjudged, and decreed that a perpetual injunction issue restraining and enjoining the defendants and others from infringement of claims 19, 20, 28, 30, 31, 32 and 37 of said reissued patent 13,436 and claims 6, 7 and 9 of said letters patent 1,020,656 and in all other respects, said interlocutory decree be and the same hereby is confirmed and made final; and it is further

Ordered, Adjudged and Decreed that the writ of injunction heretofore issued and served herein be and the same hereby is vacated and set aside in so far as it enjoined and restrained the defendants and others from infringement of claims 11, 13, 16, and 24 and 38 of said reissued letters patent 13,436 and claims 1, 2 and 3 of said letters patent 1,020,656; but it is

Ordered, Adjudged and Decreed that in so far as said writ of injunction restrained and enjoined the defendants and others from infringement of claims 19, 20, 28, 30, 31, 32 and 37 of said reissued patent 13,436 and claims 6, 7 and 9 of said letters patent 1,020,656 and in all other respects, said writ of injunction be and the same hereby is confirmed and made perpetual; and it is further

Ordered, Adjudged and Decreed that there shall be no accounting of profits and damages herein nor any reference to a Master for an accounting, and it is further

Ordered, Adjudged and Decreed that each party shall pay its own costs and neither recover costs from the other; and it is further

Ordered, Adjudged and Decreed because of the waiver of damages and profits that this decree be and the same is made final.

(Sgd.) A. L. Sanborn, United States District Judge.

Chicago, Illinois, Aug. 5, 1918.

[fol. 344] District Court of the United States,
Northern District of Illinois,
Eastern Division, ss:

The United States of America to Solva Waterproof Glue Company, Burch-Kane Company, Lowell R. Burch, and Thomas B. Kane, and to your counsellors, attorneys, solicitors, trustees, agents, clerks, employees, servants, and workmen, and to each and every of you, Greeting:

Whereas, it hath been represented to the Judges of our District Court of the United States for the Eastern Division of the Northern District of Illinois in Chancery sitting, on the part of Perkins Glue Company, Complainant in its certain bill of complaint, exhibited in our said District Court on the Chancery side thereof, before the Judges of said Court, against you, the said Solva Waterproof Glue Company, Burch-Kane Company, Lowell R. Burch and Thomas B. Kane, to be relieved touching the matters complained of. In which said bill it is stated, among other things, that you are combining and confederating with others to injure the complainant touching the matters set forth in said bill, and that your actings and doings in the premises are contrary to equity and good conscience. And it being ordered that a writ of perpetual injunction issue out of said Court, upon said bill, enjoining and restraining you, and each of you, as prayed for in said bill: We, therefore, in consideration thereof, and of the particular matters in said bill set forth, do strictly command you, the said Solva Waterproof Glue Company, Burch-Kane Company, Lowell R. Burch and Thomas B. Kane, enjoining and restraining you and

each of you and your officers, directors, servants, agents, attorneys, associates, successors, confederates, salesmen, workmen and any person acting for or on behalf of you, from selling to others glue base material intended to be treated by others to make glue, in infringement of letters patent as described and claimed in Claims 19, 20, 28, 30, 31, 32 and 37 of reissued letters patent Number 13,436 and claims 6, 7 and 9 of said original letters patent number 1,020,656, or any of said claims, and from directing or contributing to or aiding or abetting any such infringement, until this Honorable Court, in Chancery sitting, shall make other order to the contrary. Hereof fail not, under the penalty of what the law directs.

[fol. 345] To the Marshal of the Northern District of Illinois, to execute and return in due form of law.

Witness, the Hon. A. S. Sanborn, judge of the District Court of the United States for the Northern District of Illinois, at Chicago, in said District, this — day of August, in the year of our Lord one thousand nine hundred and eighteen and of the Independence of the United States of America the 143rd year.

(Sgd.) By T. C. Macmillan, Deputy Clerk. (Seal.)

In United States District Court, Western District of Michigan, Southern Division

In Equity. No. —

Perkins Glue Company, Plaintiff,

vs.

Holland Furniture Company et al., Defendants,

On Reissued Patent No. 13,436

Order Reopening Case

This case coming on for hearing this 26th day of July on defendants' petition for rehearing and on defendants' motion to reopen for the purpose of introducing in evidence certain prior art patents and publications and translations thereof, and after hearing James A. Watson and William

H. Davis for defendants and Gorham Crosby for plaintiff, It Is Ordered:

1. That the case be, and hereby is reopened for the purpose of the introduction of—

1. The Belgium patent to Gerard No. 34869.
2. The French Patent to Dornemann No. 243781.
[fol. 346] 3. Extract from German publication by Wilhelm Schmidt.
4. Translations of the above.
5. Amendment of the answer to include the above patents and publication.
6. Evidence by either side as to the accuracy of the translations and as to the subject matter of the new exhibits, such evidence to be taken by deposition for defendant not later than August 10th, 1923 and for plaintiff not later than September 1, 1923.

2. That the temporary injunction heretofore issued by this Court be, and the same hereby is, modified so as to permit the use of the Kane Base.

3. The case will be continued for final hearing after September 1, 1923 on a date to be fixed by the Court on application of either party.

C. W. Sessions, United States District Judge.

Grand Rapids, Mich., July 26, 1923.

Approved as to form. Gorham Crosby, of Counsel for Plaintiff. William H. Davis, of Counsel for Defendants.

[fol. 347] In United States District Court, Western District of Michigan

Equity. No. 3655

Perkins Glue Company, Plaintiff,

vs.

Holland Furniture Company et al., Defendants

On Reissue Letters Patent 13,436

Stipulation re Exhibits

In view of the Order made and entered herein on the 26th day of July, 1923, reopening, this case for certain pur-

poses, it is stipulated and agreed by and between counsel for the respective parties as follows:

(1) That the attached copies of foreign patents and publication and the attached translations, may be received in evidence on behalf of defendant, to wit:

Exhibit E. Certified copy Belgian Letters patent No. 34869 to Gerard and translation thereof.

Exhibit F. Certified copy of French Letters patent No. 243,781 to Dornemann and translation thereof.

Exhibit G. Certified copy of parts of German publication entitled:

"Chemischtechnisches Rezept—Taschenbuch für die gesammte Holzindustrie," edited by Wilhelm Schmid, Berlin 1882, title page, preface and article on "Apparatine," page 61 and translations thereof.

and that the Answer may be amended to include the foregoing exhibits.

(2) That if Plaintiff's expert witness Dr. William M. Grosvenor were again called on behalf of Plaintiff and interrogated he would testify as set forth below and that such statement of his testimony may be received in evidence with the same full force and effect, as if he were duly called and sworn and testified as therein stated.

Statement of Dr. Grosvenor's Testimony Referred to Above

I am the same William M. Grosvenor who previously testified in this case on behalf of plaintiff. I also testified on behalf of Plaintiff, Perkins Glue Company, in the suits against the Solva Waterproof Glue Company et al. (Solva [fol. 348] Case) and in the cases against West Michigan Furniture Company et al., Fred E. Hood et al., Standard Furniture Company et al., Gould Mfg. Co. et al., and Crandall Panel Co. et al.

I have carefully considered the Gerard Belgian Patent 34869, the Dornemann French Patent 234781 and the extracts from the Schmidt German Publication, which have been offered by defendants.

The Gerard Patent 34869 and the extract from the Schmidt publication merely discloses the old "Apparatine"

formula for producing a sizing or finishing material for textiles and the like.

Let me say, first, that this same "Apparatine" has been considered in the previous litigation on the Reissue Patent 13436 in suit, and second, that the said "Apparatine" process and product are in my opinion entirely different from the process and product of the patent in suit, and from defendants' process and product.

The Apparatine formula is given as

Water	100 parts or 76%
Potato starch	20 parts or 16%
25° potash or soda lye	10 parts or 8%

The same Apparatine process and product was first brought to the attention of the court in the Solva Case.

In the Solva case this Apparatine process and product was brought to the attention of the courts in the British patent No. 38 of Jan. 4, 1875, which is found printed at page 1279 of the Solva record. The same Apparatine process and product was also brought to the attention of the Courts in the Solva case in the Encyclopedie—Roret Article of 1877 printed on page 1307 of said Solva Record.

This same Apparatine process and product was also before this Court in the three cases against the West Michigan Furniture Co. et al., Hood & Wright and Holland Furniture Co., respectively, the same Encyclopedie-Roret article having been introduced therein, as printed in the Solva record.

Practically the same Apparatine process and product was also set up in defendants' answer in the Solva Case in a book entitled "The Chemistry and Practice of Sizing" by Percy Bean (1906), pp. 120-123.

Defendants call attention to the fact that the Belgian Patent above mentioned describes the Apparatine product as having "considerable adhesive strength only to be compared with joiner's glue" (colle forte).

[fol. 349] It will be noted, however, that the said Gerard Belgian Patent does not say that the Apparatine has the necessary properties of animal glue for furniture veneering. As one skilled in the art, I interpret the statement that the Apparatine has "considerable adhesive strength only to be compared with joiner's glue" to mean that the

Apparatine was different from the starch sizing products on the market before that time (1875) and that it more nearly resembled joiner's glue in its sizing adhesive properties than the prior starch adhesives. Gerard does not say that the adhesive power of the Apparatine was equal to that of animal glue but only that it had considerable adhesive power more nearly comparable with that of animal glue in the sizing art than the prior starch sizing adhesives.

Even this statement of Gerard's in his Belgian patent he apparently later considered too strong because when he took out his British patent 38 of 1875 (Solva record, p. 1279) he omitted any reference to joiner's glue therein. Likewise the other writers did not find his Apparatine comparable with joiner's glue.

Also after the Apparatine had been in use for over 30 years and its properties and uses should have become well known, Percy Bean in his book published in 1906 (referred to above) fails to in any way mention it as comparable with animal glue or joiner's glue but instead says it resembles gum tragacanth, which is notably unsuitable for furniture veneering.

I have many times carried out the process and produced the product described by Gerard.

I have done so by taking potato starch purchased on the open market in Germany and treating it with caustic soda and water exactly as specified in the formula set forth on page 2 of the Gerard patent. I used German potato starch because in my opinion knowing that German potato starch is largely used throughout Europe, it was most probably the starch Gerard contemplated. I have also taken potato starch purchased on the open market in this country and treated it in exactly the same way. I have also taken cassava starch and other starches and treated them in exactly the same way. No one of the resulting adhesives was fit for veneer glue. In all cases I obtained a thin watery sizing material, which in some instances, particularly with the German potato, tended to take on the characteristics of a thin water jelly. That is, while jelly-like it had relatively little cohesion as compared with [fol. 350] the viscous, semi-fluid glues of Perkins and defendants. In all cases the resultant adhesive tended to take on more or less of this gelatinous property although the

adhesive at the same time was very watery and thin. The gelatinous characteristic I found prevented proper penetration of the adhesive on wood which taken with the excessive water in the adhesive prevents it from producing joints of the required strength for furniture veneering. It contracts largely in drying because of the relatively small amount of solid material in it; and this weakens the joint in addition to the weakness caused by irregular penetration and excessive water. The apparatine differs in all of these respects from both Perkins glue and the defendants'.

I found the Gerard apparatine to be a very satisfactory heavy sizing adhesive but too weak in joint strength for veneering.

Gerard's initial statement is that his composition is a new composition for sizing fabrics. It is well recognized that sizing materials are lacking in the essential strength for wood veneering. The next important passage is on the third page, about the middle of the first full paragraph. If the material is stirred—agitated—to a very great extent, as there suggested, using five parts of water to start with, my experience has been that the more that mixture is agitated, the thinner and more like a size it becomes, and the lower the actual tensile strength of the test on wood.

On the next page 4, I feel that the same thing is stated in a different way, the first two lines of the last paragraph; "Incident-lly apparatine may advantageously replace gums, glues and gelatines in all their uses." That is as sizes. Immediately following is the expression; "It may also be successfully used as a thickening agent in tissue printing, and it further succeeds remarkably well in preventing the formation of scale in boilers." That indicates, in my opinion, the other arts to which Gerard recognized his material as being applicable. He nowhere speaks of wood or suggests its use for veneering. As a matter of fact, my actual tests of Gerard's adhesive for joint strength indicate that it has about half the strength of the glues used for veneering work.

Regarding the product described in the Schmidt German Publication, the product is the same as that described in the Gerard patent and differs from the defendant's glue and Perkins' glue in the same essential respects. The fact has [fol. 351] been brought out that this is in a wood-working

pocket handbook for the whole industry. It should likewise be noted that this book covers wood impregnating, which is sizing, dyeing, etc. The author describes himself as the author of other books on wood ornamentation, etc., and devotes a portion of his preface to the details of that particular line.

The fact that this apparatine was called to the attention of the wood working industry in a receipt book for the wood working industry in 1882 and the wood working industry appears to have never been able to use it for gluing veneers indicates to my mind very forceably that the apparatine was not suitable for veneering and lacked essential properties of animal glue for this purpose.

The Gerard apparatine was no doubt suitable in the wood industry for sizing wood surfaces in order to fill up the pores and make the surface smooth. That such was one of the intended purposes of the receipt in this Chemico-Technical Receipt Book is shown by the footnote on page 62 of the book, which explains that C. Puscher as early as ten year prior to 1882 recommended a similar material as a high class sizing. The apparatine may also have been intended to be used in the wood industry as a binder for colors applied to wood, because the book says, after explaining that it may be used for sizing fabrics, that "it may also be applied as a binder for dyes."

Regarding the Dornemann French Patent 243781 this unquestionably discloses a sizing and finishing material: and the reason for reaching that conclusion is the result of carrying out tests, with the patent itself. I made tests in respect of the Dornemann patent as indicated below and these tests showed that the product of the patent is materially different from both the defendants' glue and the glue of Perkins. The passage in the specification which attracted my attention as indicating the amount of water which should be used was that either a chloride or a caustic alkali could be used as alternatives. If those are used as alternatives, one would expect to get approximately the same result which ever one was used: and that gives us a guide to the amount of water to be applied.

I therefore took potato starch obtained in Germany and dissolved it in 5 parts of water with .25 part (25%) of caustic and obtained a very thin and water adhesive like the

Gerard apparatine. I then took the same kind of starch and mixed it with 5 parts of water and .8 part (80%) of [fol. 352] calcium chloride and obtained an extremely heavy jelly not suitable either for sizing or wood veneering. This shows that at that concentration, i. e. with 5 parts of water, the two are not equivalent, i. e. when using caustic on the one hand and calcium chloride on the other hand. I then took some of the same starch and dissolved it in 20 parts of water with .25 part (25%) of caustic soda and I also took some of the same starch and mixed it with 20 parts of water and .8 part (80%) of calcium chloride and I found substantial equivalence in the character of the resulting adhesives produced. Both were suitable sizing adhesives. This shows that Dornemann contemplated a relatively large proportion of water in the neighborhood of 20 parts to one part of starch. I made the same tests on starch purchased in this country and obtained substantially the same results.

By the use of calcium or magnesium chloride, both of which are highly hydroscopic agents—that is, they take up water rapidly from the air—a considerable portion of water would be held in the material. This would ruin it as a veneer glue, but it lends value to it as a sizing adhesive, keeping it flexible and pliable, as required in cloth.

Another part of the patent also shows that Dornemann only contemplated a thin liquid and relatively weak adhesive. He says:

"For certain applications, lastly, for which a glue having more body or consistence may be desired, I further expect to add, to the amount of 10 to 30 per cent., some inert substance, as barium sulphate, kaolin, sodium or potassium silicate, etc. which has no chemical action and does not alter the processes I have described for the manufacture of the glue (colle) itself."

In other words, his original adhesive is so thin that it is possible to add from 10 to 30 per cent. of such inert substance. If it were already a heavy viscous glue like defendants' or Perkins', there would be no need to add anything to give it more body of great consistency, and if such an amount of inert material were added it would be useless for any purpose. Since, however, Dornemann uses in the neighborhood of twenty parts of water, it is quite possible

to add this quantity of inert material and still obtain a good sizing product.

[fol. 353] Furthermore, Dornemann says the mixing may be done by hand. If he contemplated any such heavy mixture as Perkins' and defendants', it could not be done by hand in batches of factory size where they mix from 50 to 150 or 200 pounds at a time. Dornemann, therefore, contemplated using a relatively large amount of water which would make it so fluid at all stages that it could be mixed by hand at all stages, as well as by mechanically operated paddles.

Dornemann further says that he prefers to construct his machinery so as to avoid "all throwing out" of the glue. A thin watery liquid would be likely to throw out, but the heavy viscous semi-fluid glues of Perkins and defendants could not throw out. It would be absurd to speak of them in that way. Dornemann, therefore, contemplated only a thin adhesive containing something like twenty parts of water, which would likely throw out.

Dornemann also says his final glue (adhesive) is:

"allowed to stand—and occasionally skimmed if advisable."

He contemplates allowing it to stand in order that dirt or the like may rise to the top and be skimmed off. If his adhesive was heavy like Perkins' and defendants' glues, nothing in it would rise or settle and it could not be skimmed in any event. This shows again that Dornemann contemplated only such a proportion of water (say 20 parts) as would produce such a thin adhesive that dirt or the like could rise therein and be skimmed off.

Dornemann says his product

"may be used under the same conditions as all known adhesives, glues and sizes, producing much more energetic and durable effects."

By the word "glues" (colles) he obviously means finishing and paper coating or like glues or adhesives. As we have seen, his whole specification is addressed to that art and not to the wood gluing art. If he had contemplated veneer glue, he would have used the term "colle forte" (strong glue or joiners' glue).

I studied the French language for four years, and am generally familiar with chemical and technical terms therein. I have carefully investigated the meaning of the French word "colle" both among authorities in this coun- [fol. 354] try and in France. The word "colle" used by Gerard and Dornemann means gelatinous material including glue and adhesives generally irrespective of the kind or quality and is generally used in connection with the weaker adhesives. The French use the term "colle forte" to indicate strong glue or joiner's glue, particularly strong animal glue. The translations submitted by defendants are, in my opinion, poor translations in that they do not disclose this difference. The translations appear to have been carelessly made. For example, in the Dornemann patent it is stated toward the end that "kaolin" may be added. This is entirely omitted from the last translation introduced by defendants.

(2a) It — further stipulated and agreed that if Dr. Leon S. Wolfe, of Washington, D. C., were called on behalf of defendant- and interrogated he would testify as set forth below, and that such statement of his testimony may be received in evidence with the same force and effect, as though he were duly called and sworn and examined and cross-examined herein.

Statement of Leon S. Wolfe's Testimony

I am of lawful age, a resident of Washington D. C., and my business consists largely in making translations of foreign patents and technical books for patent lawyers and for use in the courts in connection with patent litigation.

When young I studied foreign languages with my grandfather, who spoke a number of European languages, and later during the years 1892, 1893, and 1894 I studied Greek Latin, French and German at Central University of Kentucky.

For about three years, from 1911 to 1914, I was employed as assistant in, and later as Librarian of, the Scientific Library of the United States Patent Office, during which period I made a number of translations of French and German patents and publications.

In the year 1914 I resigned my position as Librarian in the Patent Office, and I have been in business in Washington since that time making searches in the foreign patents and publications and making translation- of such patents and publications, and the making of such translations for patent lawyers and for use in patent litigation has occupied more than half of my time during the past nine years. [fol. 355] During this period I have made many hundred translations from the French and German languages.

I have carefully examined the translations of the Belgian patent to Gerard, the French patent to Dornemann, and the extract from the Schmidt Book, submitted in this case by the defendant-, and compared these translations with the originals in foreign languages, which have also been submitted by the defendant-, and I find that the translations are substantially and literally correct. In making this comparison I have referred to French-English and German-English dictionaries which existed at the times the foreign patents referred to were issued and the Schmidt Book published, and especially for the meaning of the French word "colle." I find that this word is correctly translated "glue" and is a generic term approximately coextensive in breadth with the word "glue" in the English language. The only error which I have found in the said translations is the omission of the word "kaolin" which should occur following the words "baryum sulphate" line 5, page 3, of the translation of the Dornemann patent.

I am well acquainted with Mr. Paul Wernicke, the official translator of the Patent Office who made the translations above referred to, and I have had occasion to review his work a number of times. Mr. Wernicke is a highly educated gentleman and I have found his translations to be literally correct.

(3) It is further stipulated and agreed that if William H. Walker were called on behalf of Defendants and interrogated he would testify as set forth below, and that such statement of his testimony may be received in evidence with the same force and effect as if he were duly called and sworn, and examined and cross examined herein.

Statement of William H. Walker's Testimony Referred to Above

I am the same William H. Walker who testified on behalf of defendants in the cases of Perkins Glue Co. vs. Gould Manufacturing Co.; Perkins Glue Co. vs. Wisconsin Chair Co. and Perkins Glue Co. vs. Crandall Panel Co.; I am fifty-three years of age; live at Bridgeton, Maine, and am by profession a Consulting Chemist.

I am familiar with the Perkins reissue patent in suit, the Gerard Belgian Patent No. 34869, and with the French patent to Dornemann, No. 232,781.

[fol. 356] In regard to Gerard patent, this patent was granted to H. Gerard, dated January 19, 1874. Gerard commences his specification by pointing out that as a scientific fact it was well recognized that when starches are treated with caustic alkalis a true combination takes place in which the starch plays the part of an acid. Gerard states that his discovery consists in making from this scientific idea an industrial process. At least in manufacturing an industrial product. He points out that he prefers to use potato starch, although other starches are available for the purpose. He uses either caustic soda or caustic potash as the dissolving agent, and can carry on the reaction either at a high or a low temperature. He gives to this material the trade name apparatine, and gives his preferred proportions.

I have made starch glue in the way described in the starch. I have used those glues so made in veneering. On January 5th, 1922, I went to the factory of the Grand Rapids Veneer Works, Grand Rapids, Michigan, and made up a batch of this material, using potato flour as the starch and caustic soda as a dissolving agent. For 50 pounds of the starch I added 125 pounds of water, which is less water than the amount here specified, because I intended to use the glue thus made in setting up veneers, and, as already pointed out, the veneering industry would not tolerate as much water as is here stated. The solution of the starch proceeds exactly as set down by Gerard, and the glue which was produced was a very thick jelly. As Gerard suggests, it should be stirred by mechanical means, because of the fact that the product improves with the energy of stirring, and it is so tough and jelly-like that one cannot agitate it

by hand. I ran the mixer an hour and 40 minutes. As Gerard points out, a very viscous and ropy adhesive was produced, and this I applied on the ordinary spreading machine there in use to the making of veneers, which were at that time being manufactured in the factory. They were what were known as bellows, and also what were known as glass backs. We made quite a large number of these, something over a hundred, and allowed them to go out into the factory along with the product of the factory as it was being made that day. This material proved to be a very fine glue, acceptable in every way to the men running the veneering machinery, and it produced satisfactory veneers.

[fol. 357] I have made this Gerard glue with varying proportions of water. I have made it with 5 parts of water, as suggested in the first series of proportions, also with $4^{3}/_{4}$ parts, as suggested in the second series of proportions there given, also with three parts of water. The effect of adding more or less water to it is simply one of dilution, the 3 parts water being somewhat, though not much, more fluid than the one containing three parts of water. This, of course, is a little more fluid than the one containing $3^{1}/_{2}$ parts of water, although I think the average person would not detect the difference. All of those, that is, the 5 to 1 and the 3 to 1 and the $2^{1}/_{4}$ to 1 are jelly-like masses, stiff as distinguished from syrupy liquids. The addition of more or less water does not have any chemical effect on this glue. Let me say I made up veneers myself with the 5 to 1 parts of water, and they seemed to be perfectly satisfactory in every way, though the veneering people were not accustomed to using that much, and I therefore used the proportion to which they were accustomed in their work with animal glue. The more water one has, the more fluid the glue is, and the easier it breaks down to this viscous or ropy form which he speaks of.

The difference, however, is very much less than I think one would expect from the difference in the amount of water.

It is the practice to agitate this glue in the factory pretty continuously. They keep the agitators going throughout the day. There is no difference whatever that I can find between this Gerard glue and the defendants' glue.

Referring now to the Dornemann French patent, No. 232,781, dated December 11, 1893, the object of this patent is to make a glue from starch. Any type of starch can be used, and the liquid with which it is dissolved may be, the patentee states, a chloride or an alkali, the preferred alkali being caustic potash or soda. The patentee gives as an example for 100 parts of starch 20 to 30 parts of the caustic alkali. He states that he can operate at either a high or low temperature according to the speed desired. He does not state the amount of water in the example noted, but allows the operator to use that amount of water which gives the consistency of glue to satisfy the purpose for which it is intended. He uses a vat or tank equipped with an agitator which he says he prefers to have driven from either the side or the bottom, in order that he may avoid the rising of the glue during manufacture, and throwing [fol. 358] it out of the vat. This to me means that he was accustomed to use a very thick and heavy mixture, because by experience I find that the tendency of those glues is to creep up the agitator and to rise into the driving gears. The suggestion of Dornemann, is, therefore, a good one, that the agitator be driven from the bottom. The material can be used for any of the purposes for which glue is employed. This Dornemann patent is the same process of dissolving a raw starch in caustic solution, as Gerard, except that the caustic solution is stronger. I have made glue that way. On January 4th, 1922, at the factory of the Grand Rapids Veneer Works already referred to, I made a batch of glue according to directions just outlined. Tapioca flour was employed, and a ratio of 3 to 1 of water. 20 per cent caustic was used, and a splendid glue was obtained. This was placed in one of the spreading machines of the factory, and a lot of bellows panels were produced. These went into regular stock, as I have already described. The men pronounced this glue as being perfect so far as working was concerned, and it seemed to me admirable in every way.

Referring to the Gerard patent that I have discussed and the apparatine referred to therein, I used a potato starch obtained from Euetis-Pennock Company, 10 Post Office Square, Boston. It seemed like a very nice grade of potato starch. I have no personal knowledge of what, if anything, happened to that starch before I got it.

Referring to the Gerard patent, the proportions of water therein given are water 100 parts, and potato fecula 20 parts. With regard to my stirring that mixture for one hour and 40 minutes and whether I noticed any changes in the batch during that stirring, I will say, only that it became more ropy. I would still say that at the end of that stirring that it was still very much like a jelly. It was very thick. I would call it a thick jelly-like mass. I used 125 lbs. of water with 50 of starch (that is, 2½ parts of water) in this so-called Gerard glue which I used in the panels which have been offered in evidence as Gerard panels. I do not find in the Gerard patent this proportion of 2½ parts of water to one of starch specifically mentioned.

With regard to any of these glues which I made up, I did not test the actual tensile strength of the joints produced so as to ascertain the result in pounds per square inch. That did not interest me. My testimony somewhat to the effect that these panels were satisfactory, was based on the opinions to me by others, by the officers of the Grand Rapids Veneer Works.

[fol. 359] 4. It is further stipulated and agreed, but only for the purposes of this case, that Kane Manufacturing Company reefrred to in the Masters' report, was, at the times the defendant Holland Furniture Company purchased vegetable glue material from the Solva Waterproof Glue Company and International Process Company, as stated in the Master's report, offering and selling to the furniture trade vegetable glue material of substantially the same kind and quality, as sold to the defendants at other times by said Kane Company, as shown by the Master's report, and at the same prices that the defendant paid for Solva Waterproof Glue Company and International Process Company glue material.

Gorham Crosby, of Counsel for Plaintiff. James A. Watson, of Counsel for Defendant.

Dated August 22, 1923.

Translation of Belgian Patent #34869, to Gerard (H), for Importation

A New Composition for Sizing Fabrics, Named Apparatine

(Issued on Jun. 30, 1874, to be dated Jun. 19, 1874)

Description (by copy).—Fecula, starches and in general all amylaceous substances undergo a deep-seated modification when in the presence of caustic alkalis, and they give rise to true combinations in which the feculent matter plays the part of an acid. These facts, which are known and have been described, have thus far remained within the domain of science.

My discovery consists:

1) In the industrial manufacture of a product which has remained unused to the present day, and in which I discovered the most remarkable and useful properties.

2) In the application of this new product to the sizing of fabrics.

I have given it the name apparatine.

Any starches, feculas, meals, pulps of tubers and roots, may be transformed into apparatine by placing them in the presence of an alkali or alkaline salt. It is, however, more convenient, in the manufacture on a large scale, to use potato starch exclusively, and to treat it with caustic lye of potash or soda. The materials named may be mixed in any proportion, but in order to obtain an industrial and commercial product it is necessary not to depart too much from the following proportions which experience has caused me to recognize as the best. The operation may take place [fol. 360] at high or low temperature, under pressure or in a vacuum, the result is always the same. Composition of apparatine by parts and by hundredths:

Water	100 parts	76 00 hundredths.
Potato fecula	20	16 00
25-degree potash or soda lye	10	8 00
	130	100 00

Pat. 34869.

The fecula is first poured into the water, which is constantly stirred to keep it in suspension. The lye is then

added while the stirring continues. After a few moments the mass, which was milky, suddenly becomes clear and sets to a very thick jelly, which must be agitated with energy. This operation only takes a few minutes, depending on the quantity worked upon. Its termination is recognized by there not remaining the least cloud in the mass. Experience taught me that the quality of the product improves as the energy of stirring increases I therefore expect to work the stirring by means of strong mechanical apparatus driven by steam. This apparatus does not present anything special and is not worth describing.

Apparatine thus manufactured is a colorless, transparent, odorless substance of slightly alkaline tests, very viscous and ropy, and of a considerably adhesive power only to be compared to that of joiner's glue (collee forte). Exposed to air, it will only dry without decomposing or spoiling and without ever giving off any odor. Kept boiling for a long time, even until completely dried, it greatly thickens and it swells, but acts in the same way. Dried in thin plates, it shows the pliability and toughness of horn, without is fragility, for a sheet may be folded and refolded several times, without breaking it. As sizing it is equally suitable for fiber, yarn and for tissues of silk, wool and cotton &c. Its use communicates to fabrics a softness and fullness to the touch, hitherto unknown. In other cases, the most loosely woven fabrics may be made rigid as metal sheeting. After its application, apparatine becomes to a cerain degree insoluble, as two or three extended washings in hot water will not deprive the fabrics of their sizing. According to the expression of competent persons, this new composition will render a great and unhoped for service to the sizing industry.

[fol. 361] To sum up, I therefore claim as my property: 1) The introduction into the industries of a product of science alone, which has thus for reminded without application. 2) The industrial manufacture of this new product. 3) Its application to the sizing of fabrics.

Incidentally apparatine may advantageously replace gums, glues and gelatine in all their uses. It may also be successfully used as a thickening agent in tissue printing, and it further succeeds remarkably well in preventing the formation of scale in boilers. In a word, its application-

are manifold, but the chief and most important one of them is that as a sizing for fabrics.

Fr-E tr: P. W.
Aug. 5, 1921.
9158.

Memoire Descriptif Déposé à l'Appui de la Demande d'um Prevet d'Invention Formée par Richard Jules Dornemann pour "un Procede Industriel Nouveau de Fabrication des Colles de Fecules, et Leurs Applications"

L' invention dont je vous revendique la propriété est caratérisée par les opérations suivantes:

Je prends, comme matière première fondamentale, de lafécule de pomme de terre, de manioc, ou autre, que je délaie dans la quantité d'eau nécessaire pour en faire une sorte de lait sans grumeaux.

Puis j'ajoute au mélange liquide ainsi obtenu un produit chimique, chlorure ou alcali susceptible d'ouvrir les cellules [fol. 362] de la fécule pour obtenir la matière agglutinante qui y est contenue.

Suivant les terrains et les procédés de culture, la fécule présente une nature et une richesse différentes, renfermant plus ou moins de cellules à matière agglutinante, lesquelles cellules abandonnent avec plus ou moins de difficulté cette matière qui constitue la colle.

Suivant, donc, la fécule qu'il s'agit de traiter, j'emploie, d'une facon analogue d'ailleurs et pour concourir toujours au même résultat ci-dessus énoncé, soit un chlorure (de calcium ou de magnésium de préférence), dans la proportion de 80 kilogs environ pour 100 kilogs de fécule soit un alcali, potasse ou soude (caustique de préférence) dans la proportion de 20 à 30 kilogs pour 100 kilogs de fécule employée.

J'effectue ce trait'tement (qui peut se faire à chaud ou à froid suivant qu'on veut aller plus ou moins vite) dans une cuve malaxeuse, de préférence en bois de sapin, mais qui pourrait être de toute autre matière non susceptible d'être attaquée par les produits que j'emploie. La forme de cette cuve peut être quelconque, cylindrique ou tronconique, avec une section circulaire ou elliptique par ex-

emple, et des dimensions appropriées aux quantités que l'on veut traiter.

Le malaxage s'opére soit à la main, soit mécaniquement, au moyen d'un agitateur à palettes placé à l'intérieur de la cuve; pour la perfection et la régularité des opérations à effectuer, l'agitation est produite à laipartie inférieure de la cuve; les palettes sont disposées à peu de distance du fond, et l'arbre qui les porte, traversant ce fond, prend son mouvement soit en dessous de la cuve, soit sur le côté au moyen d'un renvoi par pignons d'engrenage, de sorte qu'aucun organe n'arrive jusqu'a la partie supérieure du liquide, ce qui évite toute projection ou ascension de la colle en fabrication.

La durée de l'opération, variable aussi suivant la fécule employée, est comprise entre ½ heure et deux heures, suivant aussi le produit que l'on veut obtenir.

Pour la plupart des applications il n'y a plus ensuite qu'a laisser écouler la colle liquide ainsi obtenue par des petites portes à fermeture mobile ménagées à la partie inférieure de la cuva, à la périphérie.

Cette colle est envoyée directement dans les récipients qui doivent la contenir, et on la laisse reposer, en l'écumant s'il est utile, pendant le temps convenable pour qu'elle prenne la consistance voulue.

[fol. 363] Avec l'emploi de la potasse ou de la soude caustique, on obtient une colle alcaline, dont on puet se servir pour tous les usages ou' cet état alcalin n'est pas nuisible.

Mais, dans certains cas, on peut avoir besoin que la colle soit neutre, ou même légèrement acide, ou enfin légèrement alcaline.

Pour ces cas, avant de faire écouler le liquide de la cuve malaxeuse, on lui fait subir les opérations complémentaires suivantes:

On l'additionne d'un acide quelconque (chlorhydrique par exemple) jusqu'à saturation exacte de l'excès d'alcalinité initial, et jusqu'à ce que la masse soit neutre aux deux papiers de tournesol. On s'en tient là si l'on veut une colle neutre; ou bien l'onrajoute un peu d'acide ou un peu d'alcali suivant qu'on veut obtenir une légère acidité ou une légère alcalinité, suivant l'usage auquel la colle est destinée.

Cette opération complémentaire dure de ½ heure à une heure.

Elle est utilement terminée par l'addition d'un antiseptique, à la dose de ½ à 1%, acide salycilique, acide phénique, acide borique, ou tout autre antiseptique.

Pour certaines applications, enfin, pour lesquelles on voudrait une colle ayant plus de corps ou de consistance, je me réserve d'ajouter aussi, dans la proportion de 10 à 30%, un produit inerte tel que le sulfate de baryte, le kaolin, le silicate de soude ou de potasse, etc., n'ayant aucune action chimique, et ne modifiant as les procédés que j'ai décrits pour la fabrication de la colle elle-même.

En résumé, je revendique comme mon invention et ma propriété exclusive le nouveau procéde industriel que je viens de décrire pour la fabrication des colles de fécules—avec les dispositions spéciales de malaxage que j'ai indiquées, les opérations complémentaires prevues pour obtenir l'alcalinité, la neutralité ou l'acidité—ou pour augmenter la consistance des produits fabriqués—et enfin les applications nombreuses des colles ainsi préparées, qui peuvent être employées dans les mêmes circonstances que tous les agglutinants, colles ou apprêts connus, en produisant des effets beaucoup plus énergiques et beaucoup plus durables.

Signed: Richard Jules Dornemann, Paris, lo 28 Nov., 1921. Pour expidition certifiée conforms Le Chaf De Bureau Painil.

Collationne un demi—rôle manuscrit quatre rôles dactylographies.

[fol. 364] Translation of French Patent #232,781, to R. J. Dornemann, New Industrial Process for the Manufacture of Starch Glues and Their Applications (Appl'd for Sep. 13, 1893, iss'd Dec. 11, 1893) from an Official Copy Furnished by the French Patent Office

Specification Filed in Support of the Application for an Invention Patent Made by Richard Jules Dornemann, for "a New Industrial Process of Manufacturing Glues from Starches, and Their Applications"

The invention the property of which I claim is characterized by the following operations:

I take as my basic raw material, the fecula of potatoes, of manioc (cassava), or another, and mix it with the quantity of water needed to turn it into a kind of milk without lumps in it. Then I add to the liquid mixture thus obtained a chemical substance, a chlorid or an alkali, capable of opening up the cells of the starch so as to bring out the agglutinant therein contained.

Depending on the soil and mode of its cultivation, fecula shows up different in nature and richness, containing more or fewer cells filled with agglutinative matter; which cells give up with greater or less difficulty this matter which constitutes glue. Therefore, according to the kind of fecula to be treated, but in similar ways and for the sake of obtaining the same above-mentioned result, I use either a chlorid (preferably of calcium or magnesium) in a proportion of about 80 kilograms to 100 kg. of fecula, or an alkali (preferably caustic) potassium or sodium in a proportion of 20 to 30 kg. for every 100 kg. of fecula used.

I operate this treatment (which may be given at higher or ordinary temperatures according to the greater or less speed desired) in a mixing-vat, preferably of pine wood but which might be of any matter not liable to attack by the substances I use. The shape of this vat may be any, that of a cylinder or truncated cone, with circular or elliptic cross-section for instance, and of dimensions suited to the amounts to be treated. The mixing (kneading) is done by hand or mechanically by means of a paddle agitator placed within the vat. For completeness and uniformity of the operations to be effected, agitation is applied at the bottom of the vat; the paddles are placed at a short distance from the bottom, and the shaft carrying them, which goes through the bottom, receives its driving power either below [fol. 365] the vat or laterally by means of a gear-pinion transmission, in such a way that no member of it rises to the upper portion of the liquid, avoiding thereby all throwing out or rising of the glue during manufacture.

The time of the operation, also varying according to the fecula used, in between ½ hour and 2 hours, depending on the product one wishes to obtain.

For most uses it is then only necessary to allow the liquid glue thus obtained to flow out through small gates with movable closure contrived at the lower portion of

the vat, at its circumference. The glue goes directly into the vessels which are to contain it and is there allowed to stand—and occasionally skimmed if advisable—for a time suited to its coming to the desired consistence.

By using caustic potash or soda, an alkaline glue is obtained, which may be put to all uses where this alkaline state is not harmful. However, in certain cases a neutral glue may be needed or even a slightly acid one or, lastly, a slightly alkaline one. In these cases, before tapping the liquid from the mixing-vat, it is subjected to the following supplementary operations:

There is added any acid (hydrochloric, e. g.) until the initial state of alkalinity is exactly saturated and the mass is neutral to either kind of litmus paper. This is all if a neutral glue is desired; or a little acid or a little alkali is added as slight acidity of alkalinity may be desired, according to the use for which the glue is intended. This supplementary operation takes from ½ hour to 1 hour. It may advantageously be terminated by adding an antiseptic to the amount of ½ to 1%: salicylic, phenic or boric acid, or any other antiseptic.

For certain applications, lastly, for which a glue having more body or consistence may be desired, I further expect to add, to the amount of 10 to 30%, some inert substance as baryum suphate, sodium or potassium silicate &c. which has no chemical action and does not alter the processes I have described for the manufacture of the glue itself.

In sum, I claim as my invention and my exclusive property the new industrial process which I have here described for the manufacture of starch glues—with the special working (mixing) devices I have indicated; the supplementary operations provided for obtaining alkaline, neutral or acid reaction—or for increasing the consistence (body) of the manufactured product—and lastly the numerous applications of the glues thus prepared, which may be used under [fol. 366] the same conditions as well known adhesives, glues or sizes, producing much more energetic and durable effects.

(Signed) Richard Jules Dornemann.

Certified to be in agreement with the original. (Signed) Lainel, Chief Clerk. (L. S. French Patent Office.)
Paris, Nov. 28, 1921.

Fr-E/tr: PW.
Dec. 16, 1921.
9197.

Translation from Chemisch-technisches Rezept-Taschenbuch für die gesammte Holzindustrie, edited by Wilhelm Schmidt, Berlin 1882

Title Page

Chemico-technical Pocket Manual of Recipes for the entire Wood Industry particularly for the shops of cabinet-makers and architectural joiners turners and sculptors, factories of pianos, billiards, notions and toys made of wood, carpenters and ship-builders, cart-wrights, veneer and board cutting mills, wood impregnating and dyeing works, &c. &c.

A collection of practically tested approved recipes and prescriptions edited by Wilhelm Schmidt, author of "The mechanical joiner's shop," "Staining, grinding and polishing wood," &c. "Ornamentations of artifical wood, &c." and "Technical and practical hints in the field of the American furniture industry."

Berlin, Ernst Röthke's publishing house, 1882

Preface

In the great progress made by the wood-working trades and manufacturing branches, within the last decades science in general and chemistry in particular has played a prominent part. By mere practical work, without the aid of science, the wood industry would not have attained remotely the high level of modern times. Only after eminent men of science and technology took interest in the trade, joined with the practical work and made accessible the result of their researches and experience in books and periodicals to those engaged in the trade, the success became possible,

to which we can point in our day with satisfaction. Of all branches of industry, woodworking stands most in need [fol. 367] of assistance on the part of science, particularly of chemistry. No other material is as much exposed as wood to change and deterioration under the influence of air and light, moisture and dryness. Chemistry and technology alone could help in this case, by inventing ways and means of giving to wood as a crude material greater constancy, of improving its natural quality and protecting it against harmful atmospheric influences &c. &c. There belong to this field, and have originated in chemical technology the methods of impregnating, the rules for staining and dyeing wood, varnishing and polishing, hardening and softening, bending and dissolving and a hundred others. But this number of prescriptions is so scattered in the technological literature of this and other countries, that it is impossible for the practician to follow them and to find the required thing in time. Again, not everything that has been published is good and suitable to all purposes. Practical experiments alone can often decide and separate the suitable from the unsuitable, the useful from the useless. But experimenting costs money and time. Not everybody is in a position to sacrifice a high fee for learning.

I therefore consider it a timely undertaking to fill by the present pocket manual this gap in our technological literature, by collecting the communications and prescriptions scattered in technological journals, practically testing them and compiling the best in a unified book for the purposes of the wood industry; which I herewith present to my colleagues in the trade. To a practician as well as to a layman, I thus hope to have given a vade-mecum and manual which in all doubtful cases of his vocation will prove a faithful and reliable advisor to him. It is evident that not even remotely all the many recipes and prescriptions could have been included, for not only would this be of no service to the practician, but he would as the saying is, fail to see the forest for the trees. I therefore omitted all superfluous and misleading matter, and have arranged the book's subject-matter so that anyone, without a long search, will quickly and surely find what is needed in a special case. Being, as an expert, familiar with the practician's needs, have striven to the best of my ability to serve the actual requirements in every sense. I therefore in-

dulge in the hope that my desire to be useful to my colleagues will be justly appreciated.

Berlin, March, 1882.

The Author.

[fol. 368] q. Vegetable Glue—Apparatine—"Præperativ"

Apparatine is the name given by Mr. Gerard to a colorless, transparent substance manufactured by heating starch, flour or other feculent substances with caustic alkali. The substance is said to be applicable for sizing all kinds of fabric as well as for other industrial purposes, especially, among others, in the place of animal glue. It is preferably made of potato starch, with a caustic lye of potash or soda. The most favorable proportions are: 76 parts of water to 16 parts of potato starch and 8 parts of potash or caustic soda of 25°. While stirring energetically, the starch is poured into the water and then the lye is added under continued stirring. After a few moments, the liquid suddenly clarifies, giving a thick jelly, which is to be beaten thoroughly. The more it is beaten, the better will be the quality of the apparatine. The latter, prepared in the way indicated above, is a colorless, transparent substance without any odor, with slightly alkaline taste, of fibrous, glue-like structure, such as is also on the market under the name of "præperativ", coming from Reudnitz-Leipzig. Exposed to air, even for a long time, it merely dries, without decomposing, spoiling or assuming any odor. Boiled to drying, it thickens and swells, but otherwise keeps its original properties. Dried in small, thin sheets, it shows horn-like consistency but is less brittle than horn and can be folded without breaking. To transparent manufactures it lends the rigidity of metal sheeting. In all cases where glue, gum, paste, gelatine and the like find application, apparatine may be used instead. It may also be applied as a binder for dyes.

Foot-note.—C. Puscher as early as 10 years ago (s. Ind.—Bltt. 1871, p. 81) recommended as an inexpensive high-gloss sizing a paste made of flour and spirits of ammonia, or of flour and caustic soda, and described its manufacture.

Ge-E/tr:PW.
Apr. 12, 1922.

[fol. 369] MASTER'S ORDER ON ACCOUNTING

On this 9th day of September, 1921, at 10 o'clock A. M. pursuant to due notice given the respective parties, and the parties being represented by counsel, this cause came on for hearing in the matter of the accounting referred to me, John S. Lawrence as Master, by the interlocutory decree of this Court, ordering, adjudging and decreeing claims 13, 28, 30, 31 and 38 of the patent in suit, Reissue No. 13436, valid and infringed.

It is hereby ordered that the defendant Holland Furniture Company be and appear before me at a hearing on the accounting herein to be held at my office at Room 609 Michigan Trust Building in the City of Grand Rapids, Michigan, on the 22nd day of September, 1921, at 10 o'clock A. M. and then and there to render to me upon the oath or oaths of such one or more of the officers or confidential agents of the defendant Holland Furniture Company, as shall have the most certain and full knowledge of the same, a complete, definite and clear debit and credit statement or account in writing as provided by Equity Rule 63, of the vegetable glue made and/or used by it since January 1, 1913, according to, or in any manner being an infringement upon claims 13, 28, 30, 31 and 38 of said reissue patent 13436 and of the gains, profits, savings and advantages which the defendant Holland Furniture Company has received or which has accrued to it from or through its said infringement.

That said statement also specify in detail the following:

1. A detailed and itemized statement of all lots of vegetable glue base (not obtained from the Plaintiff) which the defendant Holland Furniture Company has used since January 1, 1913, to make vegetable glue, giving the date each lot was purchased and the name of the party from whom purchased, the price per pound paid for each lot and the number of pounds in each lot.

2. A statement of the number of square feet of spread obtained with the vegetable glue referred to in paragraph No. 1 above, together with an itemized and detailed statement of the figures on which said resulting spread is based,

and a statement of the number of feet spread during each month, or other convenient period, and the amount of vegetable glue used during the respective periods.

That the defendant, Holland Furniture Company, have there in Court such of its officers or confidential agents as shall have the most certain and full knowledge of the above [fol. 370] matters and have with them all the accounts, books, vouchers and records of every nature and description in the possession or under the control of the defendant, Holland Furniture Company, on which all of the said data were originally entered and all of the accounts, books, vouchers and records of every nature and description in the possession of or under the control of the defendant, Holland Furniture Company, relevant and material to the gains, savings, profits and advantages, which the said Holland Furniture Company has received and—or which has accrued to it from or through said infringement:

And that defendant serve copies of the above statement and schedules filed by it pursuant to this Order, on plaintiff's solicitors on or before the 22nd day of September, 1921.

John S. Lawrence, Master.

Dated this 9th day of September, 1921.

Before Honorable John S. Lawrence, Master in Chancery, September 22, 1921

Mr. Gorham Crosby, for the Plaintiff.

Mr. John B. Macauley, for the Defendants.

(Statement produced by defendants in response to above order filed with the Master.)

C. J. Moomaw, being sworn by the Master on behalf of the plaintiff, testified as follows:

Direct examination by Mr. Crosby:

I reside at South Bend, Ind. I am salesman for the Perkins Glue Co., Plaintiff herein, having been connected with them since November, 1914. My duties as salesman

are calling on glue users, selling, and handling practical questions with the glue users. I sell the Perkins vegetable glue which is used for veneering in making tops and panels which go into various kinds of furniture. My duties call upon me to demonstrate the [p. 6] use of this vegetable glue. I have been demonstrating this glue off and on for approximately five or six years, and in fulfilling my duties as salesman and demonstrator. I have occasion to see other glues used for veneering and I have kept in touch with other glues which have been used for veneering. In demonstrating the vegetable glue I teach the glue users how to convert the glue and how to apply it and how to [fol. 371] handle the stock after it is applied. I do this in the customer's glue room. This work brings me into frequent touch with veneer glue rooms around in the country. In a general way I have kept in touch with the market prices of other glues such as animal glues, that might be used for veneering.

I have visited the plant of the defendant, Holland Furniture Co., and examined their gluing operations there and am familiar with the class of work they do. I have [p. 7] seen Kane Manufacturing Co. glue used there. From 1915 down to date there was no glue on the market other than animal glue except this vegetable glue, that would do the work of furniture veneering such as is done in the plant of the Holland Furniture Co. equally as well—that is, with an equally beneficial result, as this vegetable glue, but at a cheaper cost than animal glue.

Cross-examination by Mr. Macauley:

The territory I cover as salesman for the Perkins Co. is pretty much the entire woodworking sections, the sections where veneer glue is used in considerable quantities. It includes the furniture sections of Canada and the central and southern states, Michigan, Indiana, Ohio, Illinois and the Pacific Coast district. I have been in [p. 8] the Pacific Coast district as many as three times. I have been in North and South Carolina, Kentucky, Tennessee and Georgia. It has been between one and two years since I have been on the Pacific Coast. It has been about a year since I have been in North Carolina. I made a general trip through North Carolina. Without something to refresh

my mind I could not tell just what factories I was in at that time or what factories I called on. Before that I think it had been a number of years since I was in North Carolina.

I have run across casein. I seldom run across it today. I do know that casein glue is in considerable use on the Pacific Coast. I have also run across albumin glue on the Pacific Coast, and also where they were experimenting with it in Wisconsin. I do not recall having run across it anywhere else. I am not familiar with the prices of albumin glue. I have heard of the prices of casein glue. I am not posted on present prices of casein glue, but from time to time I have been kept posted or kept in touch with the prices on various animal glues. At the present time I would not be able to say what the market is on animal glue. As to six months ago, I could only guess at it. Glue is sometimes used in solid work where you have no veneers, as for gluing two pieces of lumber together. That is what we call joint work.

[fol. 372] [p. 10] E. P. Stephan, a witness tendered by the defendants, being first duly sworn, testified.

Examination by Mr. Crosby:

I am Manager of the Holland furniture Co., one of the defendants. I have held that position 7 or 8 years. I am the E. P. Stephan who signed the statement that has been filed with the Master in this case. On this statement where it gives the items of vegetable glue purchased from the Solva Waterproof Glue Company, down at the bottom in typewriting is the number, "Net 819." That is not intended to be the total. I understand that is 3,000 pounds we got and we returned 2,181; that left 819. So that the 819 refers simply to the amount left of the lot which is under date of 2-26-17. That is, the 819 refers to the number of pounds which we used out of the 3,000 pounds [p. 11] given above, the 2,181 pounds having been returned. Except for the amount 2,181, indicated as being deducted, all the other quantities of vegetable glue mentioned in this statement were actually used by the defendant Holland Furniture Company, so far as I am aware of. There may have been a few bags taken out and loaned to some other

factory that I don't remember of; that sometimes happens. Of course, we have some of the last lot on hand yet, of the Kane glue, that we have not used, the last shipment. I don't know how many bags there are. We locked it up since the time we got the injunction of the court enjoining us in the use of it; we simply piled them away. I suppose that amount left on hand is from this last lot here of 20,300 pounds. As to the proportion of that lot which it is, it would be nearer a quarter much nearer a quarter than a half; about a quarter I should say, but I would not dare to say without checking up. I will verify that. Before we adopted the use of vegetable glue, about 1916, we used animal glue in the factory for veneering, and since we adopted vegetable glue in 1916 we may have used animal glue for veneering during 1916 and 1917. I could not say. We had both spreaders in [p. 12] the plant at that time. We have records which would show whether we purchased any animal veneering glue. We have those here. We are using animal glue today, because we use animal glue for jointing purposes, we always do; but for veneering purposes we have not used animal glue since we adopted the vegetable glue. I say, it may have been the first year or so before we got thoroughly established in the use of vegetable glue. [fol. 373] We have records here of the animal glue used 1916, 1917, 1918, 1919, [p. 13] 1920, and up to the present date. I could not state whether any of the animal glue shown on this schedule was used for veneering. For instance, in the year 1916 there, I would not say but some of that might have been used for veneering purposes. I don't know just when we ceased using using animal glue altogether for veneering, because when we first started using vegetable glue, we used it for a batch and then we would use animal glue again, and we would watch that veneer as it went through the factory to see what results we got from it. I know I played with this probably a year or a year and a half before I fully established in my own mind that it was all right. We have no records here showing our purchases of animal glue during the years 1914 and 1915. As to whether we have records in our office or plant showing our purchases of animal glue for veneering in 1914 and 1915, I am very much in doubt about that, but the acting secretary here can give you the information better than I

could, but I doubt it very much. As to where I got the information on the schedule regarding the purchases of animal glue in [p. 14] the years 1916, 1917, 1918, etc., that is a question the secretary can answer better than I can; he gave it to me. The secretary and bookkeeper looked over the records and got that. I can not tell you what prices we paid for animal glue for veneering in 1914 or 1915. We have not any records or data which shows the spread, or from which the spread could be calculated—that is, the spread which we obtained with animal glue on veneering in 1914 [p. 15] or '15 or '16. The secretary of whom I spoke is J. A. Vanderveen, the President and acting secretary. He would have charge of the records which would show the purchases of animal glue made in those years.

[p. 16] J. A. Vanderveen, being first duly sworn by the Master, testified as follows:

Examination by Mr. Crosby:

I am president and acting secretary of the defendant, Holland Furniture Co. I have been connected with them since 1893. We have records from 1916 on. We have a few invoices of 1915 from the Perkins Glue Co. As to animal glue we have nothing back of 1916. In 1914 I was not in the factory. The factory previous to October 13, [fol. 374] 1914, was under a different manager. It was under the management of Jacob G. Van Putten. I don't know whether in 1915 the Holland Co. was using animal glue for veneering. In 1915 I was still in the hardware [p. 17] business. I was not active. Mr. Stephan would know whether or not they were using animal glue for veneering in 1915. There were a lot of records destroyed. Our former manager—I might tell that our former manager destroyed a lot of records. I have a complete record of all the invoices of glue that are in the possession of the Holland Furniture Company on this list, and also the purchases from the Perkins Glue Company, and they run back—there are a few invoices in the Fall of 1915. You haven't the list of the Perkins on there. I took it from the order of the Court that it was not necessary for me to make

those up. As to what invoices we have as to the purchase of animal glue for veneering in 1915, I don't know what they were used for. I have every invoice that you will find on this list. We have no invoices as [p. 18] to the purchase of animal glue in 1915. I made up the schedule produced by Mr. Stephan. This schedule is not the original statement filed by Mr. Stephan but the schedule showing certain purchases of animal glue and referred to in his testimony. As to whether I made a careful search through the records of the Holland Furniture Company for invoices or records of any kind showing purchases of animal glue by the Holland Furniture Company in 1914, 1915 and 1916, I made search for invoices back to 1913. As to whether that covered purchases of animal glue, while I understood the Master's order covered nothing but vegetable glue, I made up a schedule of the purchase of all glues, everything I could find in our records, and if I had found any records showing any purchases of animal glue in the year 1914, 1915 and 1916, that would [p. 19] appear on this schedule to which I refer. Had I found any in 1914 and 1915, I certainly would have included them, because the order called for them. That is a complete record of all the invoices that I was able to find. According to the order that we received from the court we was to make up a schedule of all the vegetable glue purchased during that period, and so while we were at it I thought we might just as well make up a complete schedule of all purchases of all kinds of glue so there would be no question about it and we would not have to go back for any further records, so we put down all the [fol. 375] invoices of animal glue, every invoice we could find in our file. As to whether we have any book records, the invoices are never entered upon our books. As the invoice is paid it is charged up to the glue account. We have no records of anything at all in that line beyond the records that we show here. Our books show the glue account and show those entries from the invoices in a lump amount for the month, but not in detail. It does not show the number of pounds. I have the book with me and produce it. The glue account apparently starts January, 1916. As to the [p. 20] records for 1914 and 1915, they have been destroyed. As to whether there is any one connected with the Holland Furniture Company who would

know the grade or price of animal glue per pound which we were paying in 1915 or 1916, for animal glue for veneering, nothing beyond the invoices I have. There is no one connected with the Holland Furniture Co. who would know that from recollection. Animal glue invoices do not specify that it is to be used for veneering or jointing, I don't believe. There is no doubt but what the Holland Furniture Company did use some animal glue for veneering in 1914 and 1915 and 1916. Mr. Stephan has already admitted that they did. As to whether that animal veneering glue was a high or low grade [p. 21] or medium grade, I do not know. I might say I am not familiar with the manufacturing end of the Holland Furniture Company. I know nothing about the quality of glue used. Mr. Stephan present representing the Holland Furniture Company would know more about that than myself.

Examination by Mr. Macauley:

As to the cause of the destruction of the records of the Holland Co. to which I have referred, they were destroyed prior to the beginning of this suit. The Holland Furniture Company started suit against the manager, Albert Knooihuizen —or previous to starting suit we had the Michigan Trust Company come in there and audit; afterwards had another audit by Honacher of Chicago. During that period Mr. Knooihuizen, as he admitted on the stand, destroyed a great many of our records.

[p. 22] Examination by Mr. Crosby:

He destroyed those in the fall of 1914. As to what became of the records of glue purchased for 1915, I couldn't explain that, but I think I know what happened to them. There were a few old papers, a few old invoices back during [fol. 376] his administration. The files were not kept as they are now. We retained his bookkeeper; she was filing the same as she did before, possibly two or three letters in one file, and I couldn't tell just when that was, but that was along in the latter part of 1915 when we took the stuff he had left that was of no value to the Holland Furniture Company under its present management and destroyed it. They were paid invoices that were of no value to the present company.

E. P. STEPHAN, recalled.

Examination by Mr. Crosby:

As to whether the Holland Furniture Company used a high grade or low grade or medium grade of animal glue for veneering in 1914 and 1915, I couldn't say. At the time when I took hold of the factory I knew nothing about glues or manufacturing of any kind we simply used the [p. 23] glue they were using at that time. As to whether there is any one connected with the Holland Furniture Company that would know what grade or price of animal glue was used for veneering in 1914, 1915 or 1916, the price is shown by the records there of the glue used, but in talking about grade I don't know anything about it. These records do not show anything as to 1914 and 1915. There is no one connected with our company that would know the price of animal glue used in 1914 and 1915. The costs did not vary very much; they run around that price for years; there wasn't very much difference; I know the first two or three years the price did not vary very much. As to whether the price in 1914 and 1915 was practically the same as that paid in the first part of 1916, my impression is that—this is a matter of impression—that we were paying 12½ cents at one time for glue, it went as cheap as 12½ cents. That is animal glue such as we used for veneering. We only bought animal glue at that time, we used it both for veneering and jointing. We had two kinds of glue, one was ground, the other was a flake. I remember this, that the ground glue we used to use for veneering, and the flake glue for joint work, but the price was the same. As to whether it was 12½ cents, it was whatever it was at that time, yes. We were paying 12½ [p. 24] cents for animal glue at one time. On this schedule which Mr. Vanderveen said he made up there [fol. 377] are a number of items of animal glue purchased from the United States Glue Company, beginning May, 1916, showing at that time we were paying 14½ cents for that animal glue. The schedule shows that in August, 1916 we were paying 15½ cents per pound for animal glue. I also notice that this schedule shows no other glue purchases in 1916 except the shipment December 5, 1916 of 100 pounds of vegetable glue from the Solva Waterproof people. There is no question but the animal glue shown on

this schedule as purchased in 1916, or some of it, was used for veneering. I could not say what proportion of our work, roughly, at that time was veneering and what proportion was joint work. I couldn't say how much of the animal glue purchased in 1916 was used for veneering as shown on that schedule. We were using that animal glue right along at that time for whatever veneering and whatever joint work we had. As to whether there is any question but what the purchase price per pound given on this schedule of animal glue purchased from the United States Glue Company in 1916 represents the price per pound we were paying at that time for animal veneering glue, I take it for granted the secretary copied it right. We have the invoices here to back that up; the invoices are here so you can see the prices.

[p. 25] (The schedule produced by the witness received in evidence and marked Plaintiff's Exhibit 1, Sept. 22, 1921.)

Examination by Mr. Macauley:

As to whether the same grade of glue is used for veneering and for joint work ordinarily, I only know that when I took hold of the factory they used flake glue for joint purposes and a ground glue for veneering purposes. As to whether these glues were of what is known among glue users as of the same grades, I don't know anything about grade; I know they were the same price, that is all, and I only know that by looking at the invoices this morning, that is all I know about them. I have no knowledge of my own as to the prices of these glues, except as derived from the invoices.

[p. 26] As to the destruction of the Holland Co., records, all I know is when I took hold of the Holland Furniture Company that morning when I got to the desk there was an empty desk there; there was nothing for me to go by in the way of records, either as to the amount of furniture in the factory, what kind of furniture, what stocks were on [fol. 378] hand, absolutely had no records at all; they were either destroyed or never had been made or something. There was no system in the office at all of any kind, and what little system we have there has been put in since I took hold of the factory. It was understood, of course, that

the previous manager had destroyed a great many of them. None were destroyed to my knowledge after I took hold of the factory, except that I remember we had files, letter files, a lot of them there of all kinds of records, invoices and stuff that had been all mixed up during the auditing, and I remember one day the secretary cleaned up that room and destroyed all of those records previous to the time that I took hold of the factory. This must have been in 1916, it was after we were through with the case in the courts. I think it was in 1917 after we were through with the court case against Knooihuizen and VanPutten both.

Examination by Mr. Crosby:

From the statement I signed, most of the vegetable glue which we purchased, omitting purchases from the [p.27] Perkins Glue Company, was purchased from the Kane Manufacturing Co., whether that was practically all one kind of glue, I do not know. I tried out another kind, whether it was Kane or International, that I am confused about. As far as I remember it was simply all under vegetable glue. So far as I know it was all used in practically the same way and mixed up practically the same. It was all used for the same general class of work and all put on in the regular way with the same spreaders, same machinery. So far as I know it all behaved the same way; it behaved well.

Examination by Mr. Macauley:

This statement which I signed on behalf of the Holland Furniture Company gives as the date of the return of the 2181 pounds as in 1917. I do not recall whether there was any other glue returned subsequent to that. If there had been I would not say that I would remember it, but I think the invoices would show it, the same as this invoice—this record. I do not recall the return of any glue in 1920. As to how long we continued to purchase [p. 28] Perkins glue. I think we bought Perkins glue at different times, because to me you know glue is glue. I might buy some Perkins glue this month and buy some Kane glue the next month. It seems to me we purchased some Perkins in 1919; it seems [fol. 379] to me I bought some during the war period be-

cause those days we were buying wherever we could get material; it was difficult to get sufficient material of any kind. Whether we purchased Perkins glue in 1915 or 1916, I don't just recall; it seems to me that Perkins—that I experimented with Perkins those years; it was all an experimental proposition with me. I know I fussed with it probably a year before I adopted it, and I don't doubt but I tried out some of the Perkins glue as well as the other glues.

Examination by Mr. Crosby:

On these two statements, the one marked Plaintiff's Exhibit "1" September 22, 1921, and the other the original statement which I filed with the Master this morning, the first column in these items refers to the date, the second column to the quantity in pounds of glue purchased, the third column the price per pound, and the fourth column the total cost of the shipment.

Examination by Mr. Macauley:

[p. 29] As to who would know about the return of glue, say in 1920, why if we returned any at that time for any reason the foreman of the veneer room might know. As to who would know about the glue which might be on hand when the injunction was issued against us and which we still have on hand, which was not used, the foreman would know it as well as I do; we both know that. As to whether it was about one-fourth, I wouldn't want to say off-hand. It surely was nearer one-fourth than one-half. A little while ago he asked me if it was one-fourth or one-half, and I said it would be nearer one-fourth than one-half.

[p. 30] Proceedings September 23, 1921

(Stipulation re introduced of evidence from case of Perkins v. Fred E. Hood et al received in evidence. Under this stipulation the following testimony in said Hood case, of E. W. Steward and S. D. Taylor were received.)

[p. 31] Edson W. Steward, being duly sworn by the Master, testified as follows (Jan. 10, 1921):

Examination by Mr. Crosby:

I live in Grand Rapids. I am District Manager for the United States Glue Co. of Milwaukee, Wis. I have been [fol. 380] looking after the business here for about 21 years. I have been in the glue business since 1890. When I say glue business I mean animal glue, exclusively. I do not deal in other kinds of glue. During the last 6 or 8 years I have been selling glue over the territory of Michigan and northern Indiana. I sell glue for furniture veneering purposes. As to the grades used most generally for furniture veneering, if the majority of the people [p. 32] understood the trade terms, why I could tell them generally, according to our grade; in fact we are using the same system of grading that was adopted by the Peter Cooper Glue Company; the names indicate nothing to a man who is not acquainted with the glue, who is not acquainted with the glue business, but to answer that question the grades that are usually used for veneering purposes are the one and a quarter, the one and three-eights, the one and a half, and the one and five-eights. I refer to animal glue. Of these grades, the 1¼ is the more expensive, and then they grade down, the 1⅜, 1½ and 1⅝, the 1⅝ being the cheapest of the four. There are more expensive animal glues used for other purposes, and there are cheaper animal glues also used for other purposes; there are about three grades below the 1⅝. As to whether this would be generally used for some other purpose, well, sometimes, and then some people will use those very low grades using a great deal more glue. You will find [p. 33] a variety of buyers. Getting pretty near the same results but the lower grades are not safe to use, that is, if you get down below the 1⅝. I have been familiar with the price of, for example, the one and five-eighths glue during the last eight or ten years. We sold animal glue to Hood & Wright. According to the statement filed by Hood & Wright (in the Hood et al, case), they bought considerable quantities of glue from the U. S. Glue Comapny, in 1913 and 1914 at around 10½, 11/11½ and 10¼ cents per pound. There must have been two

grades there, that eleven cent glue and the ten and a quarter, the ten and a quarter would be the one and five-eights. As to our regular market prices for glue in barrel lots or substantial quantities of the one and five-eighths, one and a half, one and three-eights and one and [p. 34] a quarter grades of glue, supplied by our company, during the years 1915, 1916 down through 1920, in 1915 as near as I can get at it, I have to say that our records are a little bit —were destroyed, that is, notices from the factory for [fol. 381] changes, but I have taken memorandums of the sales, were ten and a quarter cents on one and five-eighths [p. 35] per pound; the 1⅜ twelve cents, the 1¼ thirteen cents. Commencing 1916, the price on the one and five-eighths for January, February and March was ten and a quarter cents; the price on the one and three-eighths for January and February was twelve cents; for March 13¢. The months of January and February the one and a quarter was thirteen *was twelve cents; for March* 13¢. *The months of Jan-* half cents. We will take it by the month, may be I better give it to you by the month. April: the one and five-eighths was eleven and a half cents; the one and three-eighths, fourteen and a half; the one and a quarter, fifteen and a half. May: the one and three-eighths, thirteen and a half—I beg your pardon, one and five-eighths; one and three-eighths, fourteen and a half; one and a quarter, fifteen and a half. June: One and five-eighths, thirteen and a half; one and three-eighths, fourteen and a half; one and a quarter fifteen and a half. July: One and five-eighths, thirteen and a half; one and three-eighths, fourteen and a half; one and a quarter, fifteen and a half. August: One and five-eighths, fourteen and a half; one and three-eighths, fifteen and a half; one and a quarter sixteen and a half. September: One and five-eighths, fourteen and half; one and three-eighths, fifteen and a half; one and a [p. 36] quarter, sixteen and a half. October: One and five-eighths, fifteen; one and three-eighths, sixteen; one and a quarter, 17. November: one and five-eighths, sixteen; one and three-eighths, twenty-two; one and a quarter, eighteen. December: one and five-eighths, nineteen; one and three-eighths, twenty-two; one and a quarter, twenty-five. Those are averages for the respective months; those are prices taken along right through the month. There might have been

a case where a price was advanced the last days of the month and that went into the next month, I got the average price right through. I have the schedule here giving these prices which I have given.

(This schedule received in evidence and marked Plaintiff's Exhibit 3, Jan. 1921.)

[p. 37] I have here a copy of the price lists that were given me by the firm, the first one was given me Jan. 4, 1917. I followed this list in giving prices to our customers and in making sales to our customers. Now, our book will show—our sales will show the same grade at three or four [fol. 382] different prices, for instance, before the price advanced we sold a man fifty barrels of glue and agreed to protect him, a man who came into the market after January 1st and bought glue, he paid the market price. These prices show what the market is on new business; on contracts of course we had to fill them at the old price. As to the market price on these four grades the first part of January 1917, with the use of this list I can state [p. 38] the market prices. I could not state them without the book because they have changed so frequently. I can give the present prices. This list is a copy of the paper furnished me by the firm. I suppose we could find the original in the files. We made this memorandum and had it right on the desk there, and first when prices were changed we discarded the old one. I could not say just exactly when we made this copy but I have them made usually soon after I get the instructions from the head office. This book, in which the prices are copied, I carry with me. I am out a great deal all over the State, I have to have a record of the prices, they are also in the office. This book is what we base our [p. 39] sales on. As to whether these are prices at which we sold this defendant, there are a good many prices in here, the prices we sold them at, yes, sir. The prices I name here include prices—we actually made sales to them.

As to the prices in force the first part of January 1917; the 1⅝s, twenty cents; 1½, twenty-two cents; 1⅜s, twenty-five cents; 1¼, twenty-seven cents. These prices continued in force until March 8, 1917, [p. 40] when we got a new

price list. The prices which came into force March 8, 1917 were 1⅝, twenty-three cents; 1½, twenty-five cents; 1⅜, twenty-eight cents, and 1¼, thirty cents. These remained in force until March 25, 1918, when we got our next change. The prices then put into effect were: 1⅝, twenty-two cents; 1½, twenty-four cents; 1⅜, twenty-six cents; and 1¼, twenty-eight cents. These prices remained in effect [p. 41] to April 15, 1918. The prices put into force April 15, 1918, were: 1⅝, twenty-two cents; 1½, twenty-four cents; 1⅜, twenty-six cents; and 1¼, twenty-nine cents. These went until Jan. 1, 1919, when the following prices were put into effect: 1⅝, twenty cents; 1½, twenty-two cents; 1⅜, twenty-three and one-half cents, and 1¼, twenty-seven cents. These remained in effect until May 1, 1919, when the following were put in effect: 1⅝ eighteen cents; 1½, twenty cents, 1⅜, twenty-two cents and 1¼, twenty-five cents. These re- [fol. 383] mained in effect until April 3, 1920, when the following prices were put into effect: 1⅝, twenty cents; 1½, twenty-two [p. 42] cents; 1⅜, twenty-four cents, and 1¼, twenty-seven cents. These prices continued in force until today. As to whether we always sell exactly one or the other of these grades or mixtures thereof, we prefer to sell our regular grades, but frequently we go to a concern and they say, see what you can match this particular glue for, we will give you a sample, it may be a split between our one and three-eighths, and one and a quarter, we make a [p. 43] price accordingly, match the grade exactly. We might make sales a fraction of a cent above or below any of the prices I have given on glue which would be a mixture of two or more grades. In that case the price which would be charged for the mixture would be based on the proportions of the two grades used. It was not a shading of any figures. We have three points one way and the other, a person's sample that they submitted us might be the very high side of our grade, or the low side of another grade, we mix just exactly to that figure, just exactly the proportions. The result would be the same, it is for them to see that they are getting just exactly the same volume [p. 44] and the same solidity to their solution. As to how these prices that I have given compare with the prices of other large animal glue concerns; well, it has been my experience that these prices have been on the low side, that

we have been lower than any other concern. As to how much lower, the prices vary so that I couldn't go back now from memory and state what they were in the years that we have gone over. That is how much lower ours have been at any particular time. I have known of times when we have been for instance on that one and a quarter grade. Now of course, this is only one or two concerns, whether you want to accept anything of that kind or not, where we have been twenty cents below them in price; of course perhaps a month after they might have come down five cents or they might have come down ten cents a pound. [p. 45] I remember one particular case we had at that time a price on one and a quarter glue at thirty cents and the party came to me to know if we were still holding that price. He said he had been assured that glue could not be bought in the market for less than fifty. Of course, that is the way we get our information. We don't get printed quotations from other glue companies, we just pick them up here and [fol. 384] there. As to the average difference in price between our prices and those of other large animal glue concerns during the last five years, I think those grades would run at least two cents a pound below the market. That would be on reasonable amounts such as [p. 46] suppose a man was using two or three or five barrels a month. On small orders for a few hundred pounds or one hundred pounds, or a few hundred pounds, the price would be different, we don't open barrels and open packages; those prices are all based on full packages. If we have to open packages we ask a different price, we don't call that market at all. The price used to vary sometimes according to the amount of glue a customer takes right along, but it doesn't vary much of late. I mean this: take a concern that is in the market for say ten barrels a month, would place an order for fifty barrels, may be a hundred barrels, at that time we had a big stock of glue and he could compel us to shade prices. The last two or three years it has been the other way, so that that is the best way I can answer that question, we had to meet competition other people would cut and we would meet them, everybody was anxious for the business and working hard for it. That is the reason why those variations came in.

[p. 47] I have had occasion to go into furniture factories and panel factories where they have been using animal glue, and in my business, examine into their methods of using animal glue. As to how this happens, well, there is hardly any two cases alike. You can go into a factory and begin to talk to a man, introduce yourself and talk about your goods, it may be that someone will make a remark that will lead to something else and the man will say, well, now, we have good results and we are only paying so much for glue, and one thing will lead to another and perhaps, I don't know just how it comes out, because there is no stereotyped rule, might ask some question about the system of melting glue, that often times comes up, cooking glue as they call it. In that case that would open up the way of taking me into the factory to show me their system, and asking for information. A good many times I have had occasion to look into troubles which the furniture men or veneer men have in connection with gluing up veneers. A good many times I have been called upon to make suggestions as to overcoming such troubles. There is a difference in spread between these various grades of animal glue, that is, one and five-eights down to one and a quar- [fol. 385] ter. [p. 48] The reason for this is that the one and five-eighths will not take as much water to the pound and give you a body, as the one and three-eighths will—as the one and a half, which is the next grade higher. As you go down in grade each grade will use its proportion of less water to the pound. In order to get the body to your glue you have got to have the water in the proper proportion. The cheaper the glue per pound of dry glue the less it will cover in actual square feet per pound. Let me add a word there, provided you have the same class of stock in all cases, if you are to take the four grades, the one and a quarter, the one and three-eighths, the one and a half, the one and five-eighths, and use the same class of stock, use your glue under the same conditions, there you would get an average, they would run in about the proportion of the ri e—the difference in the price. That is assuming other conditions being equal, what you would save by using a cheaper glue you would lose by having to [p. 49] use more of it, have to use so much more. These glues are all based on their water taking qualities, and the price is made the

same so that one grade lower than another should not take the same portion of water and do the same work. As to whether a man gains nothing and loses nothing by buying cheaper glue, he doesn't gain anything but you have not got the volume of strength in the cheaper glues that you have got in the better grades. You can hold it for a time but later on it is liable to let go, it hasn't got the strength. These different grades of glue also show some differences in quick setting or drying qualities. The different factories desire different qualities as to setting and drying, according to their particular class of work.

Cross-examination by Mr. Johnson:

[p. 50] This paper has been marked Plaintiff's Exhibit 3, I took those from our daily entry book of sales. I had a stenographer copy them and the prices that I have given for the years 1915-1916, I went over, took them right off our record. This paper was prepared by a stenographer from an original given here. I have no present recollection without this as to what the prices were. I depend on those. I do not know what the prices for 1⅝ were in January, 1915, without looking for them, because they have changed so. As to the prices for 1915 and 1916 I couldn't say that right offhand without going back to the records. These records [fol. 386] show my own transactions. It is a copy taken from our daily record of sales, made [p. 51] by me and accepted by me. I had a stenographer copy it. I had previously copied that from the sales record. That is clerical. I copied it and handed it to her to copy, I had it in kind of rough form because I had taken memorandum right along fast, I handed to her to copy it. If there are errors there they would be the stenographer's errors, but going over those, I went over those this morning and I have them very clearly in my mind. As to the prices I read from my book, I can not give the price two or three years ago except as I see the figures in the book because they have changed so, but I can go back to the records. The entries in my book are contemporaneous made by myself [p. 52] or my assistant under my instructions because I am not at the office all the time. When I say under my supervision or instructions, I mean I told someone to copy

figures from the price list, when I was talking about my little book [p. 53]. We have reduced our price to meet competitors when they would cut their prices. That was up through before—just about the time the war got on, about a year before that. Since that time we have not done that, because we have been short of glue. We used to reduce our price to meet competitors before the war broke out in 1914. It was soon after that that the consumption commenced to increase and the supply commenced to decrease. After that we did not reduce our prices to meet competitors prices.

The kind of wood used does affect the spread of glue. I don't know so much about the vegetable but I should imagine it would be true of vegetable. I have never worked around any vegetable glue. Animal glue does serve the same purpose as vegetable glue. It is used in the same class of work. As to whether it is just as effective [p. 54]; these people have been getting a lot of our business away from us. I guess animal glue is just as good as vegetable; I think so. Animal glue has been on sale for a long period of years. What I know about the prices of vegetable glue, is only hearsay. I have no means of getting at invoices to know what the prices are. We consider them competitors. As to whether I included them when I said we reduced our price before the war;—well, they were not so strong then as they are now, they were not doing the business that they are doing now. No, we included animal glue, we didn't include them.

[fol. 387] The price lists that were furnished us were typewritten. They come to us on a letter signed by the firm and sometimes signed by the Manager and sometimes by the [p. 55] Assistant, from our home office in Milwaukee. I haven't any of those with me, we haven't had any in so long. They are in the files some place. I don't do the filing myself but I think I could find several of them in the files now. I haven't seen any lately. I haven't looked at any, I think it is a year since we have had a change in price. We haven't had occasion to refer to those before for some time, there hasn't been anything come up to do that. But I might say they are used continually, we have them, we have a copy of them right on the desk at all times, but not in that letter form. The paper marked exhibit 3—

the orginal of that was taken by myself from our daily entry book of sales, and handed to the stenographer [p. 56]. The stenographer copied it. I did not bring it. I think it is in the office. I didn't keep it. I supposed this was all that was necessary.

Examination by Mr. Crosby:

I did not have in my memorandum book a copy of the prices in force during the years 1915 and 1916. I was not able to find those. I got these figures on Exhibit No. 3 from a Sales Record Book. I produce one of those books here. These prices given on Exhibit 3 were the average prices in force for the respective months given and at which I made sales during those months. We enter the name and the destination of the concern, the number of barrels and the grade, lot numbers and prices. The [p. 57] handwriting here is principally by my assistant. It is done under my direction. These two books that I have in my hand are records which we rely upon in our office in the general conduct of our business. Most of the sales are made by me personally, the sales are started by me. As to directing these entries;—well, now, I don't direct these personal ones, but I instruct the office, my assistant, for instance I make as sale, we will say I go down here and get an order for a barrel of glue to start with, she has got all the information, the lot, the grade and the price and everything. Now, they may take that barrel and try it, and it is all right; they will call in and say send over two barrels of glue like the sample, I may not know anything about it, I am not there, my assistant has been trained under me, I [fol. 388] have had her for ten years, to follow our system. I don't bother about details. I leave that to my assistant. She doesn't go out to sell. Occasionally [p. 58] she will take an order over the phone and fill it, a new order. I have occasion to examine that book from time to time. Whenever I am away I come back and look over this book, to see who has made purchases and what they have had and the prices. I got these monthly averages from those books by going right through and making memorandums of sales of these particular grades in question. I did that work in this particular paper, Exhibit 3 is the result of my work. I

didn't make that paper, that is, I made it except that the clerical work was done by somebody else. This is my production *by* the clerical work was done by [p. 59] someone at the typewriter.

Since shortly after the commencement of the war we did not have to cut prices to meet that of competitors. As to how the prices I have given here for 1915 to 1920 compare with the prices of our competitors in animal glue; well, as I say, I don't get—a competitor don't show me his price list, you have got to work that out piece by piece. If you take an account away from a competitor on the same grade of glue and he tells you that you are saving [p. 60] him one or two cents a pound, you are disposed to accept that as a fact, you are disposed to accept it when you get his business and sell him material and he tells you how much he has saved. That is the way we get our experience, we don't get it from—there is no*t* trade arrangement or gentlemen's agreement that a price list is passed around. Based on such experience as that our prices are compared with those of competitors during the last five years have been—I think that we have been the lowest right straight through.

Examination by Mr. Johnson:

As to whether I have no real knowledge as to what a competitor has charged; no, I have not. But if a [p. 61] concern that I am selling—I am just going to explain how I get my information—if a concern that I am selling tells me that people have tried very hard to get his business and have taken samples of our glue and tested it and find that we are from two to five cents a pound below, why, I am disposed to believe it. He tells me something still he keeps right on buying glue from us. That is what I base my testimony on. As to how I know that since the war we did not reduce prices to meet competitors;—well, I have [fol. 389] got the goods in stock; I have got the grades and everything; I have had an advantage over others that don't see the material at all. In other words, business has been such since August, 1914, that we didn't have to do that. We were short on material all the time. We did not reduce. We kept our price right up, the higher the better. That was also true of our competitors.

By Mr. Johnson:

Q. But not of all of your competitors?

A. Well, there has been times so far as I have [p. 62] been able to learn that they have been short of materials as well as ourselves.

Q. But that wouldn't refer to all of your competitors?

A. Not all.

Q. Always be some competitors who would reduce their prices, wouldn't there?

A. Sometimes.

Q. And it is those to whom you refer when you say you didn't cut your price to meet them, that you kept your price where it was because you had the business?

A. There has been practically no reduction in price for about three years.

Q. You kept your price?

A. The price has been very firm, the price has been firm, I don't know as there has been much of any cutting in prices.

Q. (By Mr. Crosby) By anybody so far as you know, is that correct?

A. Yes, sir."

(Witness further testifies:)

I am familiar with what we may call the market for animal glues as respects prices. I am at it every day. I think I am, independent of our own prices, I am watching the course of the market and knowing what each glue is selling for. Our prices so far as I know have never been above the market. I can't say that they have been above some competitors from time to time. [p. 63] Before August 1914 or up to about the time the war got well on and the demand for aeroplane work and everything of that kind and the increased consumption, there were times there that on good orders everybody was scratching for them and we would shade the price a little bit to secure them, because we had a good supply; to meet a competitor's price. After August 1914 we didn't have to do it, so we didn't [fol. 390] do it. There was no occasion to do it, because we had all the business we could attend to.

[p. 64] EDSON W. STEWARD recalled Jan. 12, 1921.

Examination by Mr. Crosby:

"Q. In looking over the typewritten record of the proceedings the other day, I find in your testimony a question apparently unanswered, and in order to make the record clear I will ask the question again: 'Q. It wouldn't make a give difference so far as actual cost for a given number of square feet glued up, whether you used a cheap veneer glue or an expensive veneer glue, because with cheap glue you couldn't use as much water as you could with the higher priced veneer glue' is that correct?

[p. 65] "A, I confine myself to the four grades there, I don't want to go below that.

Q. Is that correct with regard to those four grades?

A. Yes, sir, in those four grades.

Q. To make the record clear at this point, what four grades do you mean?

A. The one and 5/8, one and a half, one and 3/8 and one and a quarter."

(Witness further testifies:)

Since giving my testimony the other day, I have again checked over our standard prices during the various months in the years 1915 and 1916, and have prepared a compilation of our standard prices for the respective months of those years. I produce the same. These prices on the grades one and 5/8, one and 3/8 and one and a quarter, on the paper, I have carefully compared those with our original sales records. Those prices given on this paper represent prices of actual sales made in the respective months [p. 66] there given. In making up or checking up this compilation I referred to our daily entry records. Those are the books I produced here the other day. Those books we rely on in the general conduct of our business. They were kept in the usual order of business and they are now in my [p. 68] Control. The entries in those books; they are made by, some by myself, but the majority of them by my office assistant, some are made by the man that we call [fol. 391] our shipping clerk, who is familiar with the wants of the customers. The name of my assistant is Mrs. Bertha

I. Gregory. The name of our shipping clerk at present is Joseph Rose. He has been with us about 2 years. The [p. 69] items on the paper are taken from these daily entries of sales. That book is in current use at this time in our business. As to whether I object to have it or any part of it left here for examination of counsel;—well, I need them most any time. We frequently have to refer back to them. The glue business is peculiar business, a man will wire in and order five barrels like last or as last, or as had, something of that kind; then we have got to be sure that we get right back to find out what he has been having and for that reason we need our books in the office.

[p. 70] These books from which these figures are taken are simply books kept by the company, record of sales—what we call an entry book, more an entry book than a record of sale. It is an entry book because we enter the order and get a record of it so it can't be lost in any way, and number them as they are entered. As to who made the entries during 1915 and 1916;—well, it will take me quite a while to go through and refer to every single entry to find out. There is different handwriting here. I would have to go right through and count them all if I were to answer that question. I put some of them in. I can refer to some right quickly. The entries were largely made by my said assistant. There are a few entries made by some others. One was Bill Henshaw. I haven't heard from him lately. He left us two or three years before the war. Looking over the book, there is one entry made by myself. Principally along [p. 71] here they are made by Henshaw or Mrs. Gregory. I find somebody else in this other book which begins September 1915. Who this is I am unable to answer until I look up my time books in order to be accurate. I can't say off-hand who they are. The names don't appear there. I simply see different handwriting, I can't right off-hand [p. 73] be sure who it is. I can identify in that book handwriting of myself and my present assistant and Mr. Henshaw. The entries in those books during the years 1915 and 1916 refresh my recollection as to the standard prices then in force by our company for these four grades of glue. After such refreshing of my recollection I can state that these prices given on the sheet which I previously produced, and which gives prices during vari-

ous months in the years 1915 and 1916, were our standard [fol. 392] prices for the three grades of glue there given during the respective months there indicated. They are correct. [p. 74] These prices on plaintiff's Exhibit 2, January 12, 1921, are prices of sales actually made by our company. I don't know what other companies are doing.

"Mr. Johnson: Or were doing?

A. Or were doing, yes.

The Master: Had you a knowledge of the market prices generally of those grades of glue during times covered by that paper?

A. Well, I supposed that I had.

Q. And have you previously testified as to whether your prices generally followed the market or not?

A. I don't know as I testified to that but we have to stay pretty close to the market."

(Witness further testifies:)

I have brought with me today the little book which I had with me the other day, giving our price lists during the years 1917, and down to date. I couldn't say when the price lists given in that book for the years 1917 and down to date were written in that book. They were [p. 75] written very soon after our information reached us regarding prices. I couldn't say just now how soon after we received the instructions they were made. I did not wait a year or more after we received such a price list before the entry thereof was made in this book. It was [p. 76] no number of months. I put that information in that book almost as soon as I get word from our factory; now I might get a letter today and put it in tomorrow, but I am working on those instructions, so I can't answer your question definitely and say just the time, but that information is entered in my book within a very short time, within two or three days or four days, something of that kind. As to where that book has been kept during the years 1917 and down to date: principally I carry it with me, in order to have the latest price right at hand. It also has a great deal of other information. I use that book and the price list therein given in taking orders and making sales of glue. I have made therefrom a compilation of the prices in force and effect on the four grades of glue, one and five-eighths,

and one and a half, one and three-eighths and one and a quarter giving the prices in force with us during the years 1917 and down to date. That is a copy of those prices. [fol. 393] I brought here this afternoon two compilations of prices. This [p. 77] is one of them. The other begins Jan. 4, 1917 and goes up to April 3, 1920. The latter is the compilation I stated I made from my little memorandum book giving our glue price lists from 1917 down to the present year. In so far as prices are given on this compilation they are copies of the prices, corresponding prices, in my said memorandum book which I stated I have generally carried around with me. I have carefully compared the respective prices given in this compilation with the corresponding prices given in my memorandum book. I find the prices stated on this compilation correct with those given in my said memorandum book. By refreshing my recollection by looking over my said memorandum book, I can state the prices given on this compilation were the prices in force and effect with our company for [p. 78] those grades at the dates there mentioned. The first set of prices on this compilation is under date of January 4, 1917, and the prices given are as follows: One and five-eighths, twenty cents; 1½, twenty-two cents; 1⅜, twenty-five cents; 1¼, twenty-seven cents. Those prices went into effect on Jan. 4, 1917. Those prices remained in force until March 8, 1917, and the prices given under date of March 8, 1917 remained in force until March 25, 1918. The prices given under date of March 25, 1918, remained in force with us until April 15, 1918 and the prices given under date of April 15, 1918 remained in force with us until January 1, 1919. The prices given under date of Jan. 1, 1919 remained in force with us until Mar. 1, 1919, and the prices given under date of May 1, 1919 remained in force with us until April 3, [p. 79] 1920. The prices given under date of April 3, 1920 are still in force today (Jan. 12, 1921). In Plaintiff's Exhibit 2, of this date, I have furnished a compilation of sales, this is a compilation of our prices. I did make sales at those prices. Those are taken from sales. These are not taken from sales, but they are taken from the price lists. That was taken from sales and this was taken from price lists given up.

[p. 80] (The compilation received in evidence and marked Plaintiffs 'Exhibit 3, Jan. 12, 1921.)

During the period covered by this compilation, Plaintiff's Exhibit 3, of January 12, 1921, I did actually make [fol. 394] sales of animal glue of those grades at the prices therein given. I made the sales on behalf of the company.

By Mr. Crosby:

"Q. Mr. Steward, if I remember correctly, the typewritten record shows that you gave he price of ten and a quarter cents as being the price you were charging for one and five eighths [p. 81] glue in March, 1916. On this Plaintiff's Exhibit 3, of January 12, 1921, I find the price of one and five eighths glue for March 1916, is ten and a half cents?

A. What is the date there?

Q. March, 1916. Which do you think is correct?

A. I would think ten and a half is, because it follows along the same price in the other months.

Q. In your testimony the other day something was said about your not reducing prices to meet competition during the last few years or since shortly after the beginning of the war. Please state whether during the last five years your competitors have reduced their prices below yours on the same grade of glue.

A. I have not found that they have."

Cross-examination by Mr. Johnson:

I just stated that I think 10½ cents was the price in March 1916. I take it from the record. I have no present recollection. Plaintiff's Ex. 2 of to-day is not a complete record of sales, there are a great many other grades there. I didn't pretend on Plaintiff's Exhibit 2 [p. 82] to put down each sale that took place, not on that exhibit. This Exhibit 2 is a compilation by me, a digest as it were, or a synopsis from this book or books not in evidence, the entries in which were made by various persons in the employ of the U. S. Glue Co., some of the entires being in handwriting that I didn't recognize. The bills are sent out to our customers from the Milwaukee office but we sent a memorandum bill with the shipment without extension

price. It contains the price but not the extension. It contains the [p. 83] number of barrels, the weight of each barrel and the price. The money is paid mostly at Milwaukee; some comes to us at Grand Rapids, but the bill is sent out by the Milwaukee office and the money paid there. We don't keep the record of payments here but I can get it from these books. I didn't use those records in Milwaukee in making any of these compilations. Before [fol. 395] coming to the witness stand I did go through the books that I have here. I went through them before I testified the day before yesterday and again today. I went through them completely today looking at every entry on those grades. I do not know by whom some of the entries [p. 84] were made, right off hand, because I can't identify all the handwriting right at this moment. Exhibit 2 does refer to sales made by the U. S. Glue Co. and no other company, and Exhibit 3 in so far as it shows prices, shows prices of the U. S. Glue Co. Other companies may make those prices. Those were our prices. Beyond that—I can't say what other people do. There is nothing on Plaintiff's Exhibit [p. 85] 2 to indicate when the sales were made or by whom. We have that in some other records, the orders that come in and the billing that goes out, the name of the salesmen. This tells simply prices of certain sales.

[p. 86] Edson W. Steward recalled Jan. 19, 1921.

Examination by Mr. Crosby:

Since my first testimony in this case I have located our price list of animal glue for the year 1916. (Witness' [p. 87] process same.) This price list comprises two cards pinned together, headed at the top "Price List, 1916" and there appearing below that heading the dates 4/20, 7/20, 10/25, 11/9, 11/14, and 11/20, with a column of figures under each date. The figures given under these respective dates refer to prices that went into force and effect with us on those dates. The word "Bone" and the various number to wit: Number 2, 1⅞, 1¾, 1⅝, 1½, 1⅜, 1¼ etc. in the first column refer to those grades. And the figures given on the same respective lines therewith refer to the price of

those grades on the dates given. I actually used this price list in making sales of our animal glue in the [p. 88] year 1916. I actually made sales of various grades of glue as indicated on this price list at those prices in the year 1916. The prices under date of 4/20 on this price list remained in force with us up to 7/20. The prices under date of 7/20 remained in force until the next date 10/25. Under this date, 10/25, no prices are given for "bone", "2", "1⅞" "1¾" and "1⅝". I couldn't say right now why that is. Perhaps we were low on it and didn't have much of that to offer. If we had any [fol. 396] to offer it would have been at the current price. Those grades would be affected just the same as the other grades in price. If the price advanced on the others it would advance on those in the same proportion. [p. 89] The prices under date of 10/25 remained in force with us up to 11/9 and the prices under date of 11/14 in the year 1916 remained in force until 11/20, 1916. Under the date 11/20 on the one and five-eighths, the price is 19 cents, with writing in lead pencil thereafter which appears to be Grd. This means "Ground", in ground form. I don't know just why that mark is on there, I don't remember now, but there is practically no difference between the ground glue and the flaked glue. Under the date 11/20 some of the prices for the one and a half grade and one and three-eighths grade have been crossed off in lead pencil. I could not state what the meaning of that is.

(The price list just referred to received in evidence and marked Plaintiff's Exhibit 1, Jan. 19, 1921.)

The other day when I was testifying I referred to a little memorandum book which I stated I carried around with me and which contained our price lists for the years 1917, 1918, 1919 and 1920, and I testified at some length as to those [p. 91] price lists. I have that with me and produce it. These price lists given in this book on the second page of the first white sheet, the second page of the second white sheet and the second page of the third white sheet, are the price lists for the years 1917 and down to date concerning which I testified the other day.

(The three pages referred to received in evidence and marked Plaintiff's Ex. 2 Jan. 19, 1921.)

On sheet 2 of the last mentioned Exhibit is a column headed "Test". This is the viscosity test.

Examination by Mr. Johnson:

Referring to Plaintiff's Exhibit 1 of today those entires were made by my assistant Mrs. Gregory. She copied them from instructions direct from our head office. None of these entries were made by me. As to why some were [p. 94] crossed in pencil, I don't remember now. It was under my instruction, but I don't remember now how it happened. I did attempt the other day to testify as to the prices of animal glue for the year 1916. If the prices then [fol. 397] given by me differ from those on this card, Plaintiff's Exhibit 1 of to-day, that card is right. The figures that I gave the other day are correct, too; there is no difference. The figures given by me today for the year 1916, correspond to the figures given by me the other day for the same year. We did not have a similar card to this for each year. They are carried right along there according to dates, you can see there when the price changes, [p. 95] another column is added. That is for 1916. We had a similar card for 1915. I couldn't say we had a similar card for 1914: about that time prices commenced to change. I don't remember just when we commenced to card the price on a card like that. It was at least as early as 1915, and I am quite sure it was the year before that. I haven't been able to find those other cards. In selling goods I used the card that is up to date. This is the only one I have been able to find. I haven't cards for 1915, 1917, 1918, 1919 and 1920. I haven't searched to try and find card price lists for those years. I just happened to find this one [p. 96] in the desk. I did not know it was necessary to make any search for other cards for other years.

[p. 97] Shirley D. Taylor, being duly sworn, testified as follows, Jan. 10, 1921:

Examination by Mr. Crosby:

I am sales manager of the Plaintiff, Perkins Glue Co. I have been sales manager for them about 6 years. Be-

fore that I was connected with them as salesman. As salesman my duties were to go out and drum up new business and as Sales Manager the same with the additional duty of directing the work of our other salesmen. I also do demonstrating of vegetable glue. I have installed it in different factories, of course I haven't done the bulk of our installing, but at different times I have installed it in factories. That is, the vegetable glue of the Perkins Co. As salesman and sales manager for the Perkins Glue Company for several years past I have kept in touch with prices of animal glue during those years. [p. 98] To the best of my recollection, beginning with the year 1913 down to date, the prices of animal glue such as would be used for furniture veneering are as follows. Commencing with 1913, as I remember it the price of animal glue ranged from ten to thirteen cents, and it stayed at about that price up to the [fol. 398] year 1916. Some concerns might use a ten or a ten and a half cent veneer glue and others might use a twelve and a half or thirteen cent veneer glue. Beginning with 1916, the price of animal glue started to advance and by the first part of 1917 it had gone up to twenty-five to thirty cents per pound. Along the first part of 1918 it—well, you might say it went back a little but it was so slight that it was hardly enough to make any mention of, you might say, and the latter part of 1918, it stiffened a little bit and the first of 1919 it would drop off just a trifle, the latter part of 1919 it stiffened again you might say and the first part of 1920 it was off just a little and at the present time it has stiffened again so that the fluctuation there you might say has not hardly made any difference in what you would consider an average market price. The Oil Paint and Drug Reporter gives [p. 99] animal glue quotations. During the last six years, I have had occasion to look at the animal glue prices given therein. I look at one every little while. As to how the prices which I found given therein compare with the animal glue prices which I obtained from general information; Well, I always considered them at what you would say a fair—that is, an average market price at that time from the information that I would get around in the trade.

Proceedi[illegible]s January 11, 1921

SHIRLEY D. TAYLOR recalled.

Examination by Mr. Crosby:

[p. 101] I have here a copy of animal glue quotations from the Oil Paint and Drug Reporter which was referred to at the end of the last session. I have made comparison of the quotations given therein with the actual original issues [p. 102] of the Oil Paint and Drug Reporter. The Oil Paint and Drug Reporter is what you would call a trade journal published in New York weekly which gives the current prices of, Oh, a number of different commodities, and also goes on to state in different places in the journal what present conditions are in regard to the use of different commodities. I made the comparison at the John Crerar Library in Chicago last Thursday which would be January 6th. As to the extent I compared the quotations, I was able to find very near all of the originals bound up in book form covering this list. [p. 103] I did not go back before [fol. 399] the year 1914, but from January 1914 practically up to the—well, up to November 1st, 1920, with the exception of some copies in the latter part of the year 1919 and first part of 1920 which were at the binders to be bound up. These were consecutive numbers. The copies missing or at the binders were from July 6, 1919 to June 28, 1920. That corresponds to practically a year. On this copy of the quotations seven different kinds of glue are quoted to-wit: Extra White, Medium White, Cabinet, Cabinet Low Grade, Foot Stock, Brown, and Common Bone. The one designated as "Cabinet Low Grade" would be used most generally for veneering but you might find a concern now and then that would use even a little better grade and would use the grade designated here as "Cabinet." All of those various grades listed there are animal glues.

I was present yesterday during the testimony given by Mr. Steward. I heard him testify to the effect that the grades of glue used for veneering were denoted by him as one and five-eighths, one and a half, one and three-eighths [p. 104], and one and a quarter. As to what grades on these Oil Paint and Drug Reporter quotations corresponds to the said veneer glue grades as testified to by Mr. Steward,

as one and five-eighths, one and a half, etc.;—Well, I would say that the grade designated as Cabinet Glue would compare with the one and one quarter, and one and three-eighths, and that the "Cabinet Low Grade" would compare with the one and one-half, and one and five-eighths. I have heard of Irish Glue, French Glue and Fish Glue. They are not used for veneering. I have visited the plants or factories of Hood & Wright and West Michigan Furniture Co. and am familiar with the class of work they do. From January 1st, 1915, up to October 1st, 1920, there was no glue on the market other than animal glue and except this vegetable glue, that would do the work of furniture veneering such as done in the plants of Hood & Wright and West Michigan Furniture Company, equally as well as this vegetable glue but at a cheaper cost than animal glue, not to my knowledge. In veneering generally vegetable glue will give [p. 105] greater spread than animal glue. What I mean by spread is the number of square feet of veneer surface than can be covered with say a pound of glue. I might make that a little bit clearer by saying pound of dry glue, so that it would not be misconstrued as a pound of prepared glue. A pound of prepared glue is different from a pound of dry glue but we always figured per pound of dry glue. [fol. 400] As to how these glues come to the veneer or panel or furniture maker;—Animal glue comes in two different forms, there is what they call ground glue and also what they call flake glue [p. 106]. Those are both dry forms. In making up animal glue for use they simply take a specified number of pounds of dry glue and then take the proper number of pounds of water according to the water taking qualities of that particular glue, add the water to the glue and then apply heat and melt it or dissolve it. Some apply it by the use of a glue spreader. Others apply it with a brush, but any concern that uses very much glue and does very much veneering would be apt to have a glue spreader. That is a machine, it consists of two rolls, upper and lower roll, with a glue box to supply each roll with glue. The vegetable glue comes to the furniture or veneer or panel maker in dry form and very near what you would call a powder. In preparing it for use, first you would put into the mixture the proper number of pounds of water and then add the dry glue to the water, and then there is a solvent

used in connection with it, you would dissolve the proper amount of solvent, then add the solvent solution to the glue and water and apply heat to convert it to the proper point. It is applied with a glue spreader the same as animal glue, that is, not exactly the same machine because [p. 107] vegetable glue requires a little different type of spreader. The solvent is used in the case of vegetable glue and not in the case of animal glue. I might also state there that vegetable glue can be converted with the solvent alone by using more of it. That solvent is an article of commerce on the market at a given price per given quantity. When I said "solvent alone" I meant without the use of heat. I didn't mean leaving out the water. When I stated that the spread means so many square feet of glued surface per pound of glue, I meant a pound of glue as it is received by the user, you might say from the maker of the glue, in dry form. The solvent used in making up this vegetable glue is caustic soda. Most always three per cent or three pounds of caustic soda to each one hundred pounds of dry glue is used. As to the cost of the caustic [p. 108] soda, it is a commodity that fluctuates a good deal but we always buy it on contract so we don't pay a great deal of attention to what the market is but it is usually around five and a half to six cents a pound for the grade that we use. There are different grades of it, we use what is known in the trade as seventy-six per cent powdered caustic.

[fol. 401] Examination by Mr. Johnson:

The Perkins Glue Company sells only vegetable glue and has never sold animal glue. I was never in the glue business prior to my position with the Perkins Company, so I never sold animal glue. Of course, I am more familiar with the price of vegetable glue. Any knowledge that I may have as to the price of animal glue is not obtained by actual sales or experience in selling animal glue. I obtained that information from some one else, by at different times seeing invoices for animal glue and I have also seen animal glue salesmen price lists. It is from that source which I obtained my knowledge upon which I [p. 109] based my testimony. In other words occasionally I would see some salesman price list and from that I would gather what the price of animal glue was that was being sold by that

particular salesman, and also see invoices at different times of concerns that were buying animal glue. Those invoices would be invoices of some particular company, but frequently I would see this Oil Paint and Drug Reporter which also gives a general idea of prices. I do not take that publication but the Perkins Company takes it. I don't keep a file of the Reporter but the Company keeps a file. I think I could produce that file without great inconvenience; but that file would be kept down at our factory office in Lansdale, Pennsylvania. (Counsel for Plaintiff states that inquiry shows that the old copies there had been destroyed.) I am located at South Bend. This Oil and Drug Reporter is taken at the office in Pennsylvania, but they send one out to us every once in a while and we look it over and send it back to them. We don't get it every week. It is published in New York City. I wouldn't make it a point to examine it every week. I was not in touch with the selling price of animal glue as I was with our own glue of course.

By Mr. Johnson:

"Q. Mr. Crosby handed you two papers, which one was it that you had with you when you were in Chicago, if either?

A. This one here.

The Master: Is it marked?

Q. How can you describe that?

A. From different notations that I made on the sheet at the time I was checking the prices, but I have also compared this sheet—checked this sheet with this one here.

[fol. 402] Mr. Crosby: The witness refers in the last instance to the sheet which Plaintiff's counsel offered in evidence.

Q. I noted on the last page of the paper you have in your hand some ink notations?

A. Pencil.

Q. What are those pencil notations on the bottom?

A. Those pencil notations were made by me from the copies of the Oil Paint and Drug Reporter to [p. 111] bring the list up to November 1st, 1920.

Q. As I understand you you have made no comparison prior to a certain time in 1914, is that correct?

A. Yes, sir.

Q. What month in 1914?

A. Commencing with the first issue in January, 1914.

Q. So that the items on that paper prior to January 1st, 1914, were not compared by you?

A. No, sir.

Q. Why not?

A. I couldn't locate the books over there. Unfortunately that library is in the process of moving into a new building and they were all torn up and books were piled here and there, and it was a case of digging out and we were not able to locate the ones back of January, 1914."

(Witness further testifies:)

I have no personal knowledge of that missing link from July 6, 1919 to June, 1920. I have no personal knowledge of whether that particular volume is in that library. I rather feel though that it was as they said that those particular issues had been sent to the binder to be bound up in book form like the previous ones were. As to which animal glue that was used for veneering, the one designated as "Cabinet Low Grade" would be most generally used but a few concerns might want to use a little better grade and would use the one designated as "Cabinet" glue. That Cabinet Low Grade is used by a great many in veneer work [p. 112]. It is most generally used. There are no other publications giving prices of animal glue that I know of. There might possibly be some, but I believe if there were I would have heard of them. I don't think there could be any publication of vegetable glue price lists without my knowing it. There are none to my knowledge. If there [fol. 403] were any I believe I would know because I keep in touch with vegetable glue prices. There are other manufacturers of vegetable glue than the Perkins Glue Co. I wouldn't say quite a number, there are a few; some. We do not have in our office price lists of all the different manufacturers [p. 113] of vegetable glue. I have known what their prices were from time to time in a general way. We get that information by at times seeing contracts that the other fellows make, seeing invoices for glue purchased from

these other people. We don't get it in the regular course of business, but we see those things very frequently. I wouldn't exactly say that it was chance, our men cover certain territories regularly and call on the same people regularly. We get it from our customers, what they tell us from time to time. Some of our customers, quite a few of them, have sent us letters from these other concerns in which they are offering them vegetable glue. I did state we use a little different machinery in the application of our glue than [p. 114] they do with animal glue. We always used practically the same formula in making our glue. We call our glue or designate it as Number 183. At one time we made a Number [p. 119] 100. That was slightly different. I believe the Perkins Glue Company first began the manufacture of glue or put it out commercially in the summer of 1907. It was before I entered *there* employ. I know of it on account of the fact that I was working for a concern where it was installed at that time. We can not compare our vegetable glues with animal glues, grade to grade. There is no basis of comparison. In other words, if we speak of a "Cabinet Low Grade" one and one-half, we have nothing that corresponds [p. 120] with that. And that is true of each of these combinations given here by me and by Mr. Steward,—they are an entirely different kind of glue, that is, they do the same kind of work, but the ingredients are entirely different from which the glue is made. We do not have different grades in vegetable glue to which it can correspond to the five or six for instance given as extra white, medium white, cabinet low grade, foot stock, brown, common bone. We have manufactured but one kind of glue at a time. At the present time we only make one grade of glue. We wouldn't make two different grades at a time, during any one period. I have [p. 121] not had anything practically to do with the manufacture of the Perkins Glue. My business is entirely confined to the Sales Department, and with the making up of the fluid glue in the factory of the consumer. I have [fol. 404] had experience in the preparation of the glue in the factory where it is used. But not in the manufacture of the article of commerce sold by the Perkins Glue Company. I am not familiar with the manufacture of Perkins Vegetable Glue except in a general way. We do sell caus-

tic soda. The Oil Paint and Drug Reporter I think gives quotations on it each week. I wouldn't say that I can be sure as to each week, but I have [p. 122] noticed quotations on caustic soda in that publication at different times. I would say it is because I haven't seen it every week, that is, have not seen that publication every week. I looked up these Oil Paint & Drug Reporters in Chicago at the Crerar Library. I do not know of any other place we can get price lists of animal glue. I would say all manufacturers of animal glue charge very near the same for the same grade, but the grades don't always compare exactly. One manufacturer has a grade and another manufacturer could match it possibly, but in his regular run of grades he hasn't anything that you could say was exactly alike, for instance, the one and five-eighths glue of the United States Glue Company, the American Glue Company would have a similar grade to that, but it might not be just exactly like it and the price would be very near the same, possibly. That is what causes the variation in prices and then the different grades that each manufacturer has of course he has a different price on each different grade depending [p. 123] on the quality. The grades of different manufacturers do not compare exactly, but at some times would be very close. That is the reason for the variation in prices which I have mentioned, that is, the variations in the grades. They have the different grades of glues and they are priced accordingly, according to the grade. I have stated everything that was missing in Chicago as far as this Oil and [p. 124] Drug Reporter is concerned. Yesterday I testified to the animal glue prices over a period of years. I had refreshed my recollection before testifying. The source of my information was going back through reports in our office of our men and information of that kind that we keep along from time to time. Some of our salesmen when they came in from a trip would put in writing what he had learned from somebody as to the price of animal glue, that and my own recollection of information that I got myself. Before coming here I went over these statements of our men in our office in South Bend,—some of them. I merely did that to see if my recollection of it was correct. It was in part the basis of my testimony. Those reports on file [fol. 405] in South Bend were made by different salesmen

from [p. 125] time to time. We have five salesmen. I wouldn't say these reports were from all five of them. I suppose the reports that I looked over probably were only from two different salesmen. They would get their information while they were on the road from their customers. Those records are in our office in South Bend. I haven't got them with me. The spread of vegetable glue is affected very little by the kind of wood to which it is applied, and not as much as it is where animal glue is used. It is to a small degree.

Examination by Mr. Crosby:

I am familiar with the machinery used for spreading both animal and vegetable glue, in veneer factories. The most prominent differences between the two are;—For spreading vegetable glue it requires a machine that has adjustable scrapers for both the upper and lower rolls, to control the amount of glue that each roll picks up. An animal glue spreader doesn't require that, or a spreader to apply animal glue does not require that, but animal glue can be used on any type of vegetable glue spreader, but [p. 126] vegetable glue cannot be applied with any type of animal glue spreader. For instance, years ago in the application of animal glue they used a type of spreader that was made at that time which applied animal glue all right but when they come along to put in vegetable glue that type of spreader wouldn't apply vegetable glue properly, but after they had installed the vegetable glue equipment if they wanted to use some animal glue the vegetable glue spreader would apply the animal glue all right.

Examination by Mr. Johnson:

Whether you could switch from animal to vegetable and have the same spreader but you couldn't switch from vegetable to animal without having another kind of spreader; well, that would depend on what type of spreader you had to commence with. The old type of animal glue spreader wouldn't apply vegetable glue properly. The old type was in existence, Oh, up to 1910, it might have been a little bit later than that. It was before I went with the Perkins Co. There may be some of them manufactured today in the same

way that those old type were made by some, there is probably ten or fifteen different concerns that [p. 127] are making spreaders. They may be making some of the old type and selling them to the trade. Some of the spreader con-[fol. 406] cerns make what they call a combination spreader that will handle either glue; they have made improvements on it to take care of the vegetable glue also.

(Paper offered in evidence by Plaintiff's counsel and headed "Old Paint and Drug Reporter prices current on animal glue" and marked Plaintiff's Exhibit 1, Jan. 11, 1921.)

(Under the stipulation offered and received in evidence Sept. 23, 1921 Plaintiff's counsel offers in evidence in this Holland Case certain exhibits referred to in the foregoing testimony from said case of Perkins Glue Co. v. Fred E. Hood et al., these exhibits being (1) a copy of Oil, Paint and Drug Reporter prices current on animal glue from January 2, 1911, to November 1, 1920 inclusive; (2) a copy of what was plaintiff's exhibit 3 of January 12, 1921, in said other cases; (3) a copy of what was plaintiff's exhibit 3 of January 10, 1921, in said prior cases, said exhibit being also plaintiff's exhibit 2 of January 12, 1921, in said prior cases.

[p. 130] E. P. Stephan recalled Sept. 23, 1921.

Examination by Mr. Crosby:

Since yesterday when I was on the stand I have ascertained the amount of vegetable glue,—that is, vegetable glue not obtained from the plaintiff Perkins Glue Company—which we have in stock. That is 62 bags, 12,400 pounds. There was a little more than I thought there was. That vegetable glue was purchased from the Kane Manufacturing Co. That 12,400 pounds is included in our statement filed yesterday. So that the amount of vegetable glue which we actually used, so far as the amounts given on that statement are concerned, should be the total there given less 12,400 pounds.

"Mr. Crosby: I understand that the item given on the defendant's statement, which item is dated 1-4-1921, cover-

ing 406 pounds of vegetable glue from the Kane Manufacturing Company at seven cents per pound, is the special batch of glue which was sent by the Kane Manufacturing Company to the Holland Furniture Company last January and tested in an experimental way as testified to in open court at the trial of this case, and, that the 406 pounds men-[fol. 407] tioned on this statement is the only vegetable glue mentioned on this statement that was used in that way, all of the rest of the vegetable glue mentioned on this statement being used in the regular way in which they made up and used other vegetable glue. I ask defendant's counsel if he agrees to that?

[p. 131] Mr. Macauley: I agree to that."

(Witness, resuming:) I wouldn't be able to answer without looking up the records and invoices, what we have been paying for solvent for vegetable glue. I have some invoices here at 8 cents, here is some more at eight cents; here is some at six cents; at seven cents, six and a half, seven and a half, eight and a half. These invoices are from Oct. 17, 1917 to Feb. 12, 1921. As to a fair average of the price we have paid for solvent for vegetable glue, particularly the vegetable glue referred to on the first statement which I filed yesterday: if it is a matter of giving credit it would be easier to give you the total amount of what it has been than to strike an average. As to whether I can state the exact amount and price paid for solvent used with this particular vegetable glue referred to on the statement which I filed yesterday, not including solvent which you used with glue obtained from the plaintiff Perkins Glue Company. Why, all I could give you is the solvent bought at the time think it would average up all right by taking these figures as I have them here; it would not be far out of the way anyway because we never bought any large quantities of solvent at any one time. The total from October 2, 1918 to July 28, 1920, was 3619 pounds, at a total cost of $268.44. As to whether that covers all the solvent used with the vegetable glue referred to on my first statement filed yesterday; I don't remember having bought any solvent from any other source, and yet I may have; I couldn't answer that positively without looking up my records further on that. I made a list of our purchases of solvent to determine the total figures I have just given. That list is as follows:

October 2, 1918, 422 pounds at 8c., 33.76.
January 23, 1919, 428 pounds at 8c., 34.24.
[fol. 408] November 7, 1919, 339 pounds at 7c., 23.73.
February 18, 1920, 709 pounds at 6½c., 46.09.
April 17, 1920, 655 pounds at 7½c., 49.13.
July 28, 1920, 701 pounds at 8½c 59.59.

This correctly covers all the invoices or purchases of solvent, records of which I have with me. Undoubtedly we also [fol. 133] purchased solvent for the vegetable glue we used in 1916 and 1917, and the first part of 1918. I haven't here any records as to what we paid for solvent for the glue used during those times. If I bought of Perkins I may have bought the solvent of Perkins. We wasn't ordered to bring those records up. That would very likely be solvent used with the glue which we purchased in 1916 and 1917 from the Solva Waterproof Glue Company and Kane Manufacturing Company. I will have to look them up. I do not know what the price of this solvent was in 1916 and 1917 and first part of 1918.

By Mr. Crosby:

Q. Mr. Stephan, according to your answers to plaintiff's interrogatories which were filed in this case I understand that this vegetable glue referred to on this statement, except the 12,400 pounds which you have not used, and the special item of 406 pounds, was made up by using 100 pounds of glue to 250 pounds of water and four pounds of caustic soda, is that right?

A. I guess it is. At the time I gave the answer I got it from my veneer man.

Q. That was your regular formula for mixing up the material?

A. I suppose so.

Q. It is your understanding, is it, that four pounds of caustic soda, that is the solvent, was used with each hundred pounds of dry vegetable glue?

A. That is my understanding, yes.

Mr. Crosby: For the purposes of this case, that is, for the purposes of this accounting it is stipulated and agreed that the Master may consider seven cents per pound for caustic soda solvent used with the infringing vegetable glue

as the price per pound which the defendant paid for such solvent used with such vegetable glue.

(Witness, resuming:) During this period from 1916 to date we used considerable quantities of Perkins Glue, running into thousands of pounds.

[fol. 409] STIPULATION AS TO TESTIMONY OF EDSON W. STEWARD

Whereas, in the cases of Perkins Glue Company vs. Fred E. Hood, et al., Equity 1898, and Perkins Glue Company vs. West Michigan Furniture Company, et al., Equity 1899, heard in this court, a witness Edson W. Steward testified before the Master in the accounting proceedings with respect to the prices of animal glues of his company, the United States Glue Co.; and,

Whereas, such testimony is to be used in this accounting proceeding; and

Whereas, the plaintiff herein desires the testimony of said Edson W. Steward as to his animal glue prices during the year 1921:

It is hereby stipulated and agreed by and between counsel for the respective parties that if said Edson W. Steard were now called to testify herein and duly sworn and interrogated he would testify in substance as follows:

"I am the same Edson W. Steard who testified in the accounting proceedings in the case of Perkins Glue Company vs. Fred E. Hood, et al., and Perkins Glue Company vs. West Michigan Furniture Company, et al. My price lists, that is the price lists of the United States Glue Co. which I used, covering the year 1921, down to date, are as follows:

	1-3-20	2-1-21	4-15-21	7-1-21	9-1-21
Bone:			14	14	
1 7 8	17	17	16	15	14
1 3 4	18	18	18	16	15
1 5 8	20	20	19	18	16
1 1 2	22	22	21	20	18
1 3 8	24	24	23	22	20

	4-3-20	2-1-21	4-15-21	7-1-21	9-1-21
1 1/4	27	26	25	24	22
1 X	30	23	27	26	24
No. 1	35	32	30	28	26
No. 1 Ex.	40	38	35	31	28
A Ex.	45	40	38	34	30

The prices are in cents per pound. The prices given in the column headed 4-3-20 were the prices in force and charged by us for the respective grades from April 3, 1920, to February 1, 1921. The prices given in the column headed 2-1-21 were the prices in force and charged by us for the respective grades from Feb. 1, 1921 to April 15, 1921. The prices given under the heading 4-15-21 were the prices in force and charged by us from April 15, 1921, to July 1, 1921. The prices given under the heading 7-1-21 were the prices [fol. 410] in force and charged by us for the respective grades from July 1, 1921, to Sept. 1, 1921. The prices given under the heading 9-1-21 were the prices in force and charged by us for the respective grades from Sept. 1, 1921 to date, Sept. 23, 1921.

The above prices are a fair market value for the respective grades of animal glue at the times given, and I believe are lower than those of other manufacturers, if anything. It may be possible that we have during the periods mentioned sold a little glue at a less price than those given; for example, in some special cases where an unusually large quantity was ordered, or for other special reasons. I do not remember of any such case. Practically all of our sales, if not all, were made at the respective prices given. I personally used these price lists in making sales of glue and sold glue at the prices therein given. The above prices are prices for barrel lots."

It is stipulated that the above may be received in evidence as the testimony of the said Edson W. Steward, the same as if he had been called and duly sworn and testified as above, subject to any objections as to materiality or relevancy, or otherwise, except as to the manner of taking the testimony.

[p. 137] Proceedings Sept. 24, 1921

C. J. Moomaw again on the stand.

Examination by Mr. Crosby:

My experience in selling and demonstrating glue makes me familiar with the spreads obtained with animal and vegetable glue, that is the spread and number of square feet per pound of glue. My work brings me in touch with such matters because both selling and demonstrating are glue room propositions, and it is absolutely necessary to know animal glue costs and spreads in order to talk your proposition intelligently to the prospective customer and to make an estimate of his savings by the use of our glue. In making an estimate of the savings, that involves an estimate or knowledge of the spread obtained with both animal and vegetable glue; you have to know it. From my general knowledge of the subject I can make a very close estimate of what spread is being obtained in any particular factory by examining conditions and observing gluing operations in that factory. That applies to both animal and [fol. 411] vegetable glue. I have examined the gluing methods and conditions at the factory of the defendant Holland Furniture Company several times.

By Mr. Crosby:

[p. 138] Q. Based on your general information and knowledge of the subject, and your examinations of their gluing conditions and methods, what spread would you say the Holland Furniture Company got with the vegetable glue which they used and which was referred to on the statement which Mr. Stephan first produced the other day, and which statement I now show you? The question refers to spread obtained with their vegetable glue.

A. At least 48 feet per pound of dry glue.

Q. Based on your general information and knowledge of the subject, and your examinations of their gluing operations and methods, what spread would you say the Holland Furniture Company would have got with animal glue during the years 1916 and 1921 inclusive, using a grade of animal glue such as cost 14½ cents in May, June and July, 1916, and 15½ in August, September and October, 1916?

A. I will say not higher than 32 feet per pound of dry glue.

Q. When you speak of 48 feet per pound and 32 feet per pound, you refer to square feet of glued surface?

A. Yes, square feet of glued surface—square feet of glue line.

Q. That is one single layer?

A. One single layer.

Q. Will you please state whether the same grade or priced animal glue is used in furniture factories as in panel factories, that is panel factories where they make nothing but panels and do not make furniture?

A. The furniture factories generally use a better grade of [p. 139] glue than panel factories.

Q. That would be more expensive?

A. More expensive.

Q. I now show you an exhibit in this case entitled Oil, Paint and Drug Reporter, prices current on animal glue from January 2, 1911, to November 1, 1920, and I ask you what grades therein mentioned, if any, would be used mostly in furniture factories for veneering, and what grades mostly in panel factories for veneering.

A. The furniture factories would generally use the grade specified as "Cabinet Glue", and panel factories a low grade cabinet glue generally.

[fol. 412] Q. I now show you two sheets, exhibits in this case, giving prices of various grades of animal glue, to-wit: 1 5/8 1 1/2, 1, 3/8, 1 1/4, which prices are prices testified to by Mr. Steward in this case as prices of the United States Glue Company for those grades of animal glue, and I ask you which grades thereon, if any, would be mostly used by furniture concerns for veneering, and which grades thereon, [p. 140] if any, would be mostly used by panel concerns for veneering.

A. The last two grades, 1 1/4 and 1 3/8, are generally used in furniture work, and the 1 1/2 and 1 5/8 are generally used in panel factories.

The Master: When you say they are "generally used" do you mean that that is the result of observation, or that they are generally most fitted for the use?

A. It is the result of my close contact with what they actually do in those factories.

The Master: Do they do it because of the fitness of the various qualities of glue for the special work concerned?

A. I would say so.

Q. From your general knowledge of the subject and your observations in the plant of the Holland Furniture Company, and of their gluing methods, gluing operations and character of work, what grade of animal glue of these various grades, 1 5/8, 1 1/2, 1 3/8, 1 1/4, would you say would be required by the Holland Furniture Company to do the work which they have been doing in veneering with vegetable glue during the last few years?

A. The 1 1/4 and 1 3/8 grades.

Q. You have stated, I believe, that panel factories use a little cheaper grade of animal glue than furniture factories. Explain briefly why they are able to do this?

[p. 141] A. The panel factory is highly specialized in the work of gluing up veneers, gluing up pieces of veneer together and making ply wood. Their work is in large operations, and the gluing is the main department in their factory, and they use large quantities of glue, become very efficient in the operation, handle the work very fast, and get a great deal of economy out of every step in the operation.

[fol. 413] Q. As between furniture factories and panel factories in which class does the Holland Furniture Company, the defendant herein fall?

A. It is a furniture factory.

Q. Have you ever seen the glue of the Kane Manufacturing Company being used?

A. Yes, sir.

Q. More than once?

A. Several times.

Q. Have you ever seen the glue of the International Process Compony and the Solva Waterproof Glue Company being used?

A. Yes, sir.

Q. From your general knowledge of the subject and your information as to these glues, what have you to say as to whether the spread obtained therewith would be as great as the spread obtained with the glue put out by the plaintiff, the Perkins Glue Company?

A. The spread would at least be as high as the Perkins glue spread.

Cross-examination by Mr. Macauley:

As to when did I make these examinations of conditions [p. 142] at the Holland Plant; I was first in their plant in 1916 to my best recollection. I have been there a good many times. I could not say what month in 1916. I could not say as to just what dates I was there; I have been there a good many times. When I would go to this Holland Furniture Company plant sometimes I would see Mr. Stephan and sometimes Mr. Schepel, the glue room foreman, and if Mr. Stephan was not there I would go in the factory and see the superintendent and the glue foreman. I am not able to say how many times I saw Mr. Stephan. I would not be able to say approximately, because I don't know how many times I was there altogether. I would not be able to say definitely about how many times I saw Mr. Schepel. I can't recall. I have been making these calls for six years, and it is hard to remember specific cases. I do know the name of somebody else that I saw when I was there. It was Mr. Dyke the superintendent. I do not recall the name of the present [p. 143] superintendent. As to whether I got permission to go into the glue room when you went there; if I saw Mr. Stephan I usually told him I would go out to the glue room. There never was any objection to it. I can't remember if I always had permission or not. There was no rule that I know of against going into the glue room there. I wouldn't say about signs. [fol. 414] I don't believe in looking for them. As to what I did when I went into the glue room in 1916; my memory is, the first time I was there, that I showed them how to use Perkins Glue. Their whole glue room crew had quit, and I stayed there several days breaking in a new glue crew. They had been using Perkins glue. I think they started Perkins glue earlier than that. They had not been having trouble with it that I know of. I would say that the glue room foreman and their crew went out on a strike, they laid down, and they picked up a bunch of men on the street there and put them to work in the glue room, and I think

they called for help from us. I went up there to break in the foreman and stai-d several days and instructed him generally how to operate the Perkins glue. They were all green at it, very green. I don't know whether I got 48 feet spread when I was instructing them. As to what guaranty spread we make when I go to a customer to install [p. 144] Perkins Glue; we do not guarantee any spread. My selling talk has always been that the spread would be around 45 feet per pound, and that we generally go above that, which is true. I have never sold animal glue. Before I went with the Perkins Co. my work has been ten years with the Singer Manufacturing Company, two years with the George Cutter Company. The George Cutter Co. manufacture outside and inside electrical distributing apparatus. I have never been in charge of a glue room using animal glue. I have never worked in an animal glue room. As to what panel factories do I know to have used what I have referred to, as the lower grades of veneer glue; practically all that I have come in contact with. As to specifying say half a dozen; I would say Cadillac Veneer Company; Wisconsin Timber and Land Company; Jamestown Panel Company; Pearl City Veneer Company; Warren Veneer & Panel Company. I am positive of my own knowledge that those companies used the [p. 145] lower grade animal veneer glues. I don't know any panel factories that have used the higher grades as a rule. As to how I know what grade of glue these panel factories were using:—Well, in our selling we call on them, and to sell vegetable glue you have to have animal glue information, and we get that animal glue information when we sell. We inquire at the factories and they tell us. That is the case with each of those factories that I have mentioned, they told me. And our office records contain the records that we get from them in selling. Our office records would show panel factories that had been using a low grade animal glue. They would show the prices of the glue that they used. It is our policy to keep all records that pertain [fol. 415] to our business, and it is just as much a part of our business to know animal glue costs, price and spread, as it is to be familiar with our own spread and price. I am not able to say definitely during what years these various factories that I have mentioned used animal glue

of this [p. 146] low g..de veneer glue. As to whether panel factories or other factories get the same spread with low grade as with high grade animal glue; the high grade ought to spread a little further. As to how much farther; when you say panel factories or any other factories it is a hard question to answer. With respect to panel factories I would not be able to say how much more they would get beeause the experience has been with the lower grades in panel factories. I would not be able to say definitely that the higher priced veneer glue spreads further. I think they find economy in using a low priced veneer glue instead of a high priced veneer glue in panel factories, notwithstanding the fact that the higher priced veneer glue spreads further. As to whether the spread of Kane glue would be [p. 147] greater than that of Perkins glue; it might be greater. I would say it was at least as great; I wouldn't say it was greater.

Examination by Mr. Crosby:

Q. You stated in cross-examination I believe that you did not know what spread you got the first time you went to the Holland Furniture Company. You mean by that that you did not make any record of it, or what?

A. I mean that I took no figures on the spread at that time.

Proceedings Sept. 27, 1921

[p. 148] (Defendants' counsel offers in evidence the following testimony of the witnesses Veneklaasen, Wendt, Allen Knappen and Taylor, from the case of Perkins Glue Co. vs. Fred E. Hood et al.)

John H. Veneklassen, being duly sworn by the Master, testified as follows Jan. —, 1921:

Direct examination by Mr. Macauley:

I am superintendent of the John Widdicomb Company, Grand Rapids. They make bedroom furniture, high grade furniture, medium high grade furniture. That bedroom furniture includes beds, bureaus, chiffoniers, wardrobes,

[fol. 416] vanity dressers, tables, and chairs, all along that line. We do make veneers, but just for our [p. 149] own use. In making them we use two glues, animal and vegetable glue. We do not use both the animal glue and vegetable glues in the machines;—just use the vegetable glues in the machine. We have used animal glue in the machine. We made furniture from animal glue from the beginning of our business up until about six years ago. I started with them when I was about thirteen years old and that is about forty eight years ago. For vegetable glue we used The Perkins, and we used Perkins machine [p. 150] for applying it. We used the Francis machine for the animal glue but we couldn't use the Francis for the vegetable glue. I have had occasion to compare the spread of animal glue with the spread of vegetable glue. The last test we made on the vegetable glue was about three months ago, that made a spread of forty-two feet to the pound and we have records of six years back where we used the animal glue that could go thirty-four feet to the pound. As to what this test was;—Our kettles will hold seventy five pounds of glue, we put in seventy-five pounds of glue and two pounds of water according to the formula given us by the Perkins people. That is, two pounds of water to a pound of glue. An- that kettle being worked out on one batch as long as any glue left and then we figured what we covered with that glue;—the amount of veneering that we covered. An- we found that was 42 feet to the pound. Before that we made similar test of vegetable glue, when we were using the animal glue with the machine. Since we have taken out the machine for the animal glue we have no occasion to make any tests. We made three tests on vegetable glue. [p. 151] The result was about practically the same. As to the tests of animal glue six years before; that covered 34 square feet to the pound. That was on the Francis machines. We made several of these tests on animal glue. I can't recall how many, four or five anyway. As to the wood we used in the two tests;—We have built up stocks, generally used chestnut for core stock which is moulded with mahogany or walnut for furniture but the bulk of the stock is chestnut. About 90% of the tests which we made with vegetable glue were made with chestnut core stock and then some

other wood. The same woods were used in the tests in which we used animal glue. As to whether in the general use of the machine we would get with vegetable glue about 42 ft. spread; we can get more or we can get less by adjusting the rollers, and that is true of animal glue. We find [fol. 417] forty-two feet is about a fair spread for our work.

Cross-examination *of* Mr. Crosby:

[p. 152] That is true of animal glue except that we only get about thirty-four feet spread with the animal glue. You can put the tension on your rollers so you get more spread. I did state before that we got about thirty-four feet with animal glue for our use;—if you went to work to make a thinner spread we would have less glue, it would be a dangerous proposition, the glue would penetrate the wood, there wouldn't be sufficient glue to hold the stock. Under the same conditions, that is, the same kind of wood, the same conditions which we got forty-two feet with the vegetable glue, we would get about thirty-four feet with the animal. I think we made three tests of spread on vegetable glue. Those were made about three monthe ago. We made one I guess, oh, five or six weeks back, a period of five or six weeks or two months between. They were not made all this year. The other vegetable glue was made last summer and fall, and here about six weeks ago. They were all made within the last year. I last tested the spread of animal glue six years ago when we started and begun to use the Perkins glue we done away [p. 153] with the animal glue, we haven't tested it since on the spread. I couldn't say what year it was that we made that test with animal glue, and got a spread of thirty-four feet. As to the price of that animal glue: at that time glue was cheap and I think we paid twelve or thirteen cents a pound for it. That was at the factory—delivered to us; it cost us twelve or thirteen cents. It was a high priced veneer glue. There were other veneer glues that were lower in price. Some could be had for eight cents. When I spoke of using the Francis Machine with the animal glue, that was an animal glue machine;—made for that purpose. I don't know that they have since put out a machine for vegetable glue.

R. C. WENDT, being duly sworn by the Master, testified as follows Jan. —, 1921:

Direct examination by Mr. Macauley:

I was employed by the Perkins Company between 1908 and [p. 154] 1915. Since leaving them I operated a veneer mill down south for three years and during the war period [fol. 418] I was employed by the Government as chief inspector for glues for aeroplane work. Since then I have been employed by the International Process Co. Now I am employed by W. H. Gage Glue Co. of St. Louis. At the time I was employed by the Perkins Co. my work was salesman and demonstrator. As salesman I went out and solicited business from all furniture factories that I could get into. As to the prices of vegetable glue during the period I was with Perkins, some of the contract prices were as low as eight cents per pound, depending on the locality or the amount of glue that a customer would use in a year's time. And they ran from eight cents up [p. 155] to nine. Nothing above nine to my knowledge. I know that silicate of soda is used quite generally in panels through the entire United States. I remember of silicate of soda being used for glue as far back as, Oh, 1906, but I did not have any practical experience with it at that time. After that, when I was employed by the Perkins Glue Company, I encountered Silicate in the southern veneer and panel factories. The first place I ran into it was at Memphis, Tennessee, at the Anderson Tulley Company; the second place was at Goldsborough, North Carolina at the Empire Manufacturing Company, and also the Utility Manufacturing Company at Goldsborough. At Anderson Tulley they were using it at the first time I called on them, that was in 1908, and I knew that they had used it several years previous to that. To the best of my knowledge I was at the factory of Anderson & Tulley three times since [p. 156] 1908. They were using silicate of soda each time for three ply panels that were used for furniture panels and box shooks. A box shook is a panel that is used in making boxes for the cotton mills used in shipping cotton cloth. I have seen them put the panels in kitchen cabinets; I have seen them put in dental cabinets; I have seen them used as couch bot-

toms, for high grade couches and other furniture. I have seen them used for drawer bottoms quite extensively, and also glass backs. I have seen them used for dental cabinets at Hamilton Manufacturing Company at Two Rivers, Wisconsin,—that is a factory where they make mostly type, *lynotype*, or type used for printing, and [p. 157] also dental cabinets. The last time I was there at Anderson and Tulley plant and saw them using silicate of soda was in 1917. As to how I happened to see silicate of soda in North Carolina, I sold them an initial order of Perkins Glue to be demonstrated there. They had been using silicate of soda before, [fol. 419] for 3 ply panels for shooks and panels for the furniture trade. I saw the inspectors that passed on the work as to the quality, lay the panels aside that was shipped to the furniture trade, and I also saw the crates marked and stenciled, showing where they were to be delivered. Silicate of soda is an adhesive in itself; it comes in tank cars. It is also known as liquid glass which is used as a preservation of eggs. I saw them lay these panels aside to be shipped to the furniture factories at the Anderson Tulley Plant at Memphis, at the Empire Manufacturing Company at Goldsborough and at the Utility [p. 158] Plant at Goldsborough. I went to the Empire plant to demonstrate Perkins Glue. They did not use Perkins Glue very long. Whether several months or a year I am not prepared to say without referring to my files but they used it for a short time only. Then they went back to the use of silicate. To the best of my knowledge they continued using it to the present time. Before I went there they had been using silicate ever since they had been operating. I happened to see this silicate of soda used at the Utility Company Plant under the same conditions that I saw it used at the Empire; I was also sent there to demonstrate Perkins Vegetable Glue. I am not prepared to say when this was, it was either in 1912 or 1913. I succeeded in getting them to use Perkins Glue for a short time only. They didn't use over one car shipment, carload. They then went back to silicate [p. 159]. As to how I know; I saw them use it while they were dismantling the Perkins machinery there. I saw the Empire people use silicate after they had used Perkins. As to whether the Empire were using anything but silicate at the time that it went back to

silicate after using Perkins; they had used some Casein I had seen them using casein. That was my second visit there, that is, during the time I was putting in Perkins glue. As to how they happened to be using both casein and silicate of soda; they were contemplating of using another glue besides silicate, they wanted something just a little better than silicate and for that reason they were experimenting with Perkins and also casein. As to what the expense, relative expense, of vegetable glue and silicate of soda was at that time for veneering purposes; I know approximately, I do know exactly but I must refer to my records to tell exactly, the exact cost. My records are in South Bend, Indiana, [p. 160] or in Indianapolis at the present time. The vegetable glue was the more expensive. As to whether silicate of soda is used today for veneering panels to my knowledge, I am not positive, but I think it is used in [fol. 420] Goldsborough at the present time. Anderson & Tulley are using casein now. I don't know just exactly how long casein has been used for veneering. I know it has been used to some extent back as far as 1895. Casein is stuff they make cheese of, curd out of milk. It is not a patented article. The product has been used in paper mills for coating on paper for a great number of years, it has only been perfected as an adhesive, that is, as a high class adhesive during the war period—this last war. As to whether it is protected by patents;—I think they are all government patents. I know that some of the manufacturers have written in for the formulas to Washington, D. C. and have received three formulas that the Government has worked out during the war period. During the war period it was used principally for aeroplanes and pontoon bridges. For pontoon bridges it was used on three-ply gum veneers, three-ply [p. 161] birch veneers, this material was laid up in large sheets and was then used for building pontoons. Casein handled under favorable conditions is much stronger than vegetable glue. I worked on casein sometime at Madison, the Forest Products Laboratory. Casein glue was perfected as I have stated shortly after the United States was involved in the war. At the present time they are using it on cabinet work such as phonographs cabinets, pianos, veneered doors, and automobile bodies and a number of other articles. Casein is

used at the Ford Factor, Detroit; it is used at the Herzog Art Furniture Company at Saginaw for Sonora Phonographs, which is considered the highest class phonograph in the world, and it is used on body work, automobile body work at the Haskelite. That is in Detroit—Haskelite here in Grand Rapids, yes. And it is used by Bush & Gertz Piano Company in Chicago; it is used for building up columns at Hartman Sanders, build columns, gallaries for houses; and it is used on trunk work at—I can't remember the concern, I can't remember their name [p. 162] now—in Cincinnati. As to which of these places used it for veneers; Herzog Art Furniture Company on the Phonograph and a number of factories in St. Louis are adopting it for veneer purposes. The veneers of which I have spoken are all decorative panels. On the piano work, the panels go in the piano top and the keyboard and the ends and the sounding board, which is known in the factory as pin block work. This casein glue has been available for these fine furniture veneers for about three years now. Vegetable glue is more expensive to use than silicate of soda. This [fol. 421] has been true ever since vegetable glue has been known. I know the character of work that Hood and Wright have been doing at Big Rapids during the time that I was with the Perkins Glue Company. I do not know what it has been since. They were doing medium priced and cheap and some, a very small percentage of high grade work. These panels were for drawer bottoms, mirror backs, show case [p. 163] bottoms, and kitchen cabinet panels, inside panels of kitchen cabinets. I did make a demonstration for Hood & Wright of the spread of vegetable glue. It was longer than the spread of animal glue. I am not prepared to say exactly how much, but to the best of my recollection they got a spread on vegetable glue from forty to forty-eight feet depending on the class of work veneered and with animal glue from thirty-five to forty. I recall a provision in the Perkins contract which states that they would guarantee them a saving of twenty per cent over animal glue. That was 20% greater spread, as against animal glue. When a demonstrator makes a test, ordinarily, he gets better results for the reason that the demonstrator pays very close attention to the adjustment of the spreader and in that way keeps the spread down to a

minimum, whereas when he leaves there is one less man on the job, and naturally it don't get the close attention that it does while the demonstrator is there. I have known silicate of soda being available back as long as 1905. It has been available ever since. It has always been less in price than vegetable glue. By available I mean by that that it could be delivered in large enough quantities to warrant a large manufacturing enterprise to start using it. I never heard about it being covered by patents.

By Mr. Macauley:

Q. Do you mean to say that casein was not available as a glue to other people than the government during the war period?

A. Not the kind of glue that we were using.

Q. You mean the government had made a special formula of its own?

A. Yes, sir.

Q. And that was not available until after the war?

A. Yes, sir.

The Master: What do you mean by yes, are you agreeing with him or what?

A. I am agreeing that the formula perfected by the government [p. 165] was not available until after the armistice was signed.

[fol. 422] Other casein was available to outside parties. It had been used as a glue before this time, and for veneer work.

Cross-examination by Mr. Crosby:

I mentioned three companies with respect to silicate of soda, the Anderson Tulley Company, the Empire Manufacturing Company and the Utility Manufacturing Company. I have seen silicate of soda being used in the making up of furniture panels by another concern. I have seen panels glued with silicate in Mississippi, a little station below Vicksburg, Cedars, Mississippi. I saw them making up panels with silicate. Also the Harris Brown Cabinet Co. of Greenville, Miss. I have seen other companies use it but I can't recall them right at the present time. They

were located principally down south and I have also seen it used in some of these northern factories. There is a concern at Louisville, Kentucky; they glued up some veneers with silicate of soda. I can't recall their name right now. I know of a concern in Portsmouth, Ohio, a small suburb of Portsmouth, Ohio, the Breece Manufacturing Company, they have used some silicate in gluing panels. They use vegetable glue also. They do not use any silicate of soda now, to my knowledge. I don't know how large a quantity they used. I am not prepared to say how large a quantity the Mississippi concern used. The Utility Manufacturing Company of Goldsborough North Carolina used it in tank cars. They used it from the first I know of them, which was in 1908 and the last I know of them using it was as late as 1918. They did not use it for furniture panels. The Anderson Tulley Co. did not use all of theirs for furniture panels. As to the proportion of silicate used by these concerns for furniture panels that depended altogether on the amount of furniture veneers that their logs would produce in the veneering department. There is [p. 167] no way of arriving at the correct amount. I don't know how it would average. Regarding any of the other companies whom I stated have used silicate of soda, I do not know how much of their silicate of soda was used on furniture veneers. Regarding these various users of silicate of soda, the veneers they glued up with silicate of soda were what is know as a cheap and medium class of veneers. I have seen it enter into very high grade furniture. At the Hamilton Manufacturing Company or Hamilton at Two Rivers, Wisconsin, for dental cabinets, back panels and bottoms. That is the bottoms and backs of dental cabinets. The so-called casein adhesive was [fol. 423] improved during the war and by government agencies. When I said that casein was stronger than vegetable glue I referred to that improved casein. The government did put this improved casein glue on the market so it was available to other concerns. That is, the government never owned the casein glue but they released the concerns who were supplying the government, they released [p. 168] them from—The Government never put the casein on the market. I stated that I knew of the Haskelite using casein glue. The Haskelite Company I think is what they

call themselves. They are located here in Grand Rapids. They use some casein glue. It is similar to the improved casein glue which I have testified was developed by the government. That Haskelite casein glue does not contain blood or albuminous substances. I know because I have seen it used. As to whether I ever analysed it:—I know that there is no white blood albumen glue on the market. I am certain there is no albuminous substance in that casein [p. 169] glue. Lime is used in that improved casein glue which I said was developed during the war. I spoke of a casein adhesive being used years ago,—that old casein adhesive had lime in it. The casein I saw them use at the Goldsborough Plant had lime in it, and the casein I saw used as far back as 1905 did not have any lime in it. I first saw lime used in the casein glue, to the best of my recollection it was 1912. As to what other ingredients are used in this improved casein glue developed by the government during the war:—I was never released from the promise to the government not to divulge that secret. The employees of the government have divulged that secret.

Redirect examination by Mr. Macauley:

There is not any reason to my knowledge why silicate of soda could not be used in the north. I do not know whether at the time when Anderson and Tulley were using silicate of soda, they used any other adhesive on their furniture panels. As to the Goldsborough Co. of which I spoke they were using silicate of soda and nothing else. As to how suitable for high grade veneer work silicate of soda is; if I were looking after the gluing myself, I wouldn't [p. 170] hesitate in gluing up any kind of work with it. As to the relative spread of silicate of soda and vegetable glue; I think it is necessary to explain that somewhat; silicate of soda comes in liquid form, where the vegetable glue comes in powdered form; the silicate of soda is used out of a tank car so if you would use one pound of silicate of soda which is sold at anywhere from a half a cent per pound [fol. 424] up you would have one liquid pound where one dry pound—one pound of dry vegetable glue will make three pounds and a half of liquid glue. In other words one pound of dry powdered glue which makes three and a half or three and a quarter pounds of liquid glue at the cost of

nine cents, see; that would make,—one pound of dry glue would make—three and a half pounds of glue solution at nine cents, where one pound of silicate is sold in liquid form it is taken right out of the tank cars, one pound of that would—Oh, I would say would cover equally as far or more than one pound of liquid vegetable glue. The reason I go into detail there is we don't want to get one pound of silicate confused with one pound of Perkins glue or vegetable glue, two different things entirely, one is sold in liquid form and one is sold in dry form. One pound of dry vegetable glue is equal, when that is mixed, will make three and a quarter or three and [p. 171] a half pounds of liquid glue. That three pounds or three and a half pounds whatever proportion is mixed, to turn it into money, stands nine cents, and on the vegetable glue side where three pounds and a half of silicate liquid glue at one half or two and a half cents a pound will cover a larger area at probably a third of the cost than the vegetable glue covers. I did say that I never saw any white albumen glue or blood albumen glue. We were talking of casein. I have seen some casein used at the Haskelite factory and also some blood albumen and Mr. Crosby wanted to know if it wasn't so that they were using blood albumen out there exclusively. I think that is the way he put the question. Anyhow I have seen blood albumen and casein glues used at the Haskelite factory. The blood albumen is black or real dark red. The casein glue I saw used there at [p. 172] the factory was white and cream yellow. They are used independently of each other. As to how the casein glue which I have testified was used before the government made its improvements, compared as an adhesive with vegetable glue, I would say it compares fairly well.

Recross-examination by Mr. Crosby:

I saw them using two kinds of glue at the Haskelite plant, one a blood albumen glue and the other a casein glue. I am certain that the so-called casein glue did not have some albumen of some kind in it. I took a sample with me that I got there and it was told to me by the management that that was a sample of the glue they used. [p. 173] I analyzed that sample personally myself. I found casein in it. [fol. 425] As to how I analyzed it—I separated it by the

same process used in separating any other powders in laboratories. As to the process, the first sample we burned the casein in it and that left us the lime only which would not burn, we determined the amount of lime there was in it in that way. As to whether we did anything else to the sample, we separated the alkali from it, caustic soda. We did nothing else to it. If there had been any albuminous matter in it, that would have burned off with the casein; but it would have shown the coloring in there, there is no white albumen, blood albumen.

By Mr. Crosby:

Q. I didn't say blood albumen, I said albuminous matter, the white of an egg is albumen, isn't it?

A. Yes, but it isn't practical to add alkali to it, it will eat it up.

The Master: Let us put it this way; How did you ascertain that there was no albumen in it?

A. I really didn't ascertain that I simply went from the [p. 174] assumption that no chemist would mix alkali and albumen.

Q. In figuring the relative cost in using silicate of soda and vegetable glue, did I understand you to state in effect that for a given number of square feet of glued surface the silicate adhesive will cost about one third that of vegetable glue?

A. Yes, sir.

Q. Has that always been substantially the case?

A. It has as far as I know.

Fred M. Knappen, being duly sworn by the Master, testified as follows Jan. — 1921:

Direct examination by Mr. Macauley:

I am 41 and reside in Grand Rapids and am secretary of the Grand Rapids Veneer Works. They make veneers, and ply wood of all descriptions and dry kilns. Veneers is the wood itself before it is glued up. Ply wood is the technical — for built up or glued up wood veneers. The ply wood is

used in the manufacture of furniture, phonograph [p. 175] cabinets piano cases and general woodwork. The dry kilns are used for drying lumber. We make very few veneers for drawer bottoms, mirror backs and that kind of used, [fol. 426] except where they are specified in the complete specification for a phonograph cabinet or work of that kind, simply incidental.

Practically all of our work is high grade veneer work for outside. For the last number of years we have devoted ourselves practically to the ornamental work. Before that we used to manufacture a general line taking in drawer bottoms, case backs, mirror backs and all the cheaper exposed and semi-exposed panels. In our work we have used hide and animal glues, vegetable glues and casein. We used hide and animal glue first. We do not still use them, that is, not for general veneering purposes. We use them for edge veneering and joint work. By edge veneering I mean covering the exposed edge of, for instance, a table top or a piano end. We stopped using animal glue in our glue machines for veneering, April 1917; and then we used [p. 176] vegetable glue which we obtained from the Perkins Glue Co. We used that for nine months in 1917 and the entire year of 1918. Then we used casein for about 4 months. That would bring it down to May of 1919. Then we used vegetable glue and casein; not together; we used them separately for different purposes. We used vegetable glue for the general run of our products and casein glue for semiwaterproof work such as automobile dashes. I want to testify that, however, if I may, and that is the first part of 1919 we used casein exclusively for all products. I have not had any experience of any kind with silicate of soda in our plant. As to experience out of our plant, at one time we thought that we could compete with the southern manufacturers but we found we could not. they could manufacture panels for about one-third what it cost us. From the samples which we bought for resale, they were using silicate of soda. I have seen samples from two different firms, in fact we sold some for one of them. [p. 177] These firms were the Utility Manufacturing Company and the Empire Manufacturing Company. They are located at Goldsborough, N. C. We were jobbing their products to a certain extent. At that time we were making very few of these lower grade veneers. We were practically out of

the business. We sold these veneers which were glued up with silicate of soda mostly for packing cases. We sold some for mirror backs. I don't know to whom we sold. We used casein in the first part of 1919, we used that for all work, all we turned out, piano case work, phonograph work, and general furniture work, desk tops, etc. As an adhesive it is very satisfactory, the spread was good but there were [fol. 427] certain elements which entered into its use which made it not as satisfactory. The odor for one thing and then the amount of lime and caustic which made it rather hard on the workmen's hands. It was harder on the workmen's [p. 178] hands than vegetable glue. Vegetable glue also contains caustic but it does not contain the lime. We had no considerable complaint from the material which we had made up with casein. We have had more complaints from vegetable glue than we ever had from casein. The cost of casein during the time we were using it was 32 cents a pound. It was stock which was purchased in 1918. I never have compared the spread of casein with animal and vegetable. [p. 179] I have compared vegetable with animal. With animal glue we got a spread over a two years' period of between fifty-three and fifty-five feet; with vegetable glue over a three year period that ranged from forty-eight to fifty-six feet. That was using it in the machine. For animal glue we used a machine of our own manufacture. For vegetable glue we used a Francis vegetable glue spreader. Got that about a year ago, that is, lately; prior to that, we had used the equipment furnished by Perkins. I have no way of telling us what is the relative spread of casein and vegetable glue. The spread of glue depends upon the amount of water in it and the class of stock upon which it is being used. The more water the greater the spread, and the more water the less the sticking qualities up to a certain point. Casein glue first came to our attention during the war, in 1915 or 1916. I don't know how extensively silicate of soda [p. 180] is used for veneering purposes. Simply as a matter of trade knowledge I know that it is used.

Cross-examination by Mr. Crosby:

The casein glue which I stated we began to use in 1919 came in dry form. We prepared it for use by mixing it with from 2¼ to 2½ pounds of water to the pound of dry

casein material. The casein material contained caustic and lime. It contained nothing else to my knowledge. When I spoke of 32 cents that was 32 cents a pound of the dry material. I spoke of getting fifty-three to fifty-five square feet of spread with animal glue. That was in 1915 and 1916, we were using that animal glue on high class furniture panel work. In 1915 we were paying 12 cents a pound for our animal glue; in 1916 we paid from 12 to 24 [p. 181] cents a pound. It was above the average grade. I also stated we got from forty-eight to fifty-six feet spread with [fol. 428] vegetable glue. We got forty-eight feet spread in 1917, and 1918; in 1919 we got fifty-six feet practically and last year we got fifty, in 1920. When we got 53 to 55 feet spread we used from $2^1/_4$ to $2^1/_2$ parts of water. We first purchased casein glue in 1917; we purchased it for war work, aeroplane work, war contracts. We also used vegetable glue during 1917 and 1918. We used the vegetable glue on our general run of work. During those years the vegetable glue was considerably cheaper than casein glue. That was also true in 1919.

Redirect examination by Mr. Macauley:

In 1918 the last animal glue I bought I paid thirty-two cents a pound for. As to what proportion of water we used [p. 182] in the Perkins glue, I couldn't state exactly, but it was between two and a quarter and two and a half. After using casein glue and when we went again to vegetable glue we used $2^1/_4$ parts of water; the instructions said $2^1/_2$ but we played safe. I couldn't say we got better adhesive results with the lower proportion, but we had trouble and didn't want to take a chance. The amount of water is weighed out. It is not a matter of judgment of the employee.

[p. 183] C. B. Allen, being duly sworn by the Master, testified as follows (Jan. 22, 1921):

Direct examination by Mr. Macauley:

I am 54 and reside in Memphis. I am president of the Allen-Eaton Panel Co. I have been president of that com-

pany since its organization in the spring of 1917. Before that I was manager of the Built Up Department of the Anderson Tulley Company. The Anderson-Tulley C-. is still in existence. The Anderson Tulley Company is engaged in lumber, box veneers and ply wood. Our company manufactures exclusively gum ply wood. I was with the Anderson Tulley Co. seven years. I was employed by the Anderson Tulley Company as manager to build a plant for the purpose of making Gum Ply Wood. The gluing together of two or more parts or veneers of gum. While I was with them the Anderson [p. 184] Tulley Co. used gum only. For glue they used silicate of soda and a substitute added. For every thousand pounds of silicate of soda we added one hundred and fifty pounds of ordinary corn starch and one hundred and fifty pounds of water. The silicate [fol. 429] comes in tank cars in liquid form. I believe our contract was for a million and a half to two million pounds. For every thousand pounds of silicate of soda we added one hundred and fifty pounds of ordinary corn starch and one hundred *and* water and they were stirred together and brought to a temperature and not quite to a [p. 185] boil. I learned of this mixture;—It was first given to me in 1910 by Walter T. Haines who was then representing the Philadelphia Quartz Company. Silicate of soda is called liquid glass in reduced form, made up of glass, sand glass and water and some other ingredients,—I don't know exactly the formula. I don't know the proportion of water. I should think there was considerable of it water. This was applied by a machine,—it was a spreader, it could have been used on the ordinary glue spreader,—I had it changed so as to use a large top roll instead of a small one. The material could have been applied on the ordinary animal glue spreader. A large proportion, I should say 90%, of our output was used for furniture veneers at Anderson Tulley Co. The nearest I could come to it would be to say that it would average about twenty-five thousand feet of three ply panels per day. These were used in; [p. 186] principally in, backs and bottoms, desk bottoms, some outside work such as used in go-carts; not to any great extent for outside panels for furniture. We sold them to furniture manufacturers such as the Naperville Lounge Company then, now the Krochler Manufacturing Company,

Naperville, Illinois; Hamilton Manufacturing Company at Two Rivers; the West Michigan Furniture Company; Grand Rapids Showcase Company. We had about forty different accounts. If I remember right there was three cars sold to the West Michigan Furniture Co. Silicate of soda is used largely for box purposes when it is used straight. As to the spread of the silicate of soda at Anderson Tulley Co.—Well, I have always kept my records on a basis of—keeping cost records on a basis per thousand feet of cost. As to the cost of this mixture that depended entirely upon the cost of the articles which went into it, which varied. [p. 187] The first contract that I had with the Philadelphia Quartz Company for silicate of soda in 1911 was forty-eight cents a hundred pounds; that was F. O. B. shipping point. I believe then the rate was twelve cents; the rate from shipping point or the origin of the silicate of soda which was in Indiana to Memphis, would be twelve cents which would be added to the forty-eight. In other words the prices of the contract of silicate of soda were made F. O. B. cars shipping point. That [fol. 430] increased in later years until I believe it got up to about the time I left the Anderson Tulley Company it was along about eighty cents. That was the total cost of the silicate per hundred pounds at our plant. I think the last car was bought in the latter part of 1916. As to the maximum price we paid for the starch we mixed with the silicate,—I think the first car load of starch that I purchased for that was [p. 188] four and a half cents a pound. That afterwards increased in price to about six I think,—that was at Memphis. As to the minimum cost per thousand *foot* of our glue material; at the beginning it cost $1.23. It run up to 2.70 if I can recall along towards the last. Permit me to (refers to memorandum) 1.23 is correct. I will state that on the start. $1.80 however, is the cost when the price went above or after I left the Anderson Tulley Company. While I was with the Anderson Tulley Company it run up to $1.95 and 2.10 I think was the highest. That was along in the year 1916. That was very much cheaper than vegetable glue per thousand feet. As to the other uses for silicate; silicate of soda is a commodity that is used for coating the inside of barrels, it is used in the paper works. The [p. 189] coating in paper work. At

the beginning of 1913 the price of silicate was around 60 cents F. O. B. cars Anderson. The Allen-Eaton Co. has also used silicate of soda. They used it about a year and a half. They used the same formula I have described. This was for gluing up furniture veneers. We sold these veneers to practically the same people that I have heretofore stated. As to what each of these customers used the veneers for; I can't state what they used it for, I can state what they stated when they bought it, the purpose for which they bought it. I shipped to Naperville Lounge Company three ply quarter inch material for couch bottoms. [p. 190] The West Michigan Furniture Company asked for price and was quoted and shipped material for draw- bottoms, so stated in their letter. This all applies to shipments by the Anderson Tulley Company. The Sidway Mercantile Company of Elkhart, Indiana, bought their material for the sides of gocarts. The Lloyd Manufacturing Company at Menominee, Michigan, bought it for the same purpose. During the year which we used this silicate of soda at the Allen Eaton Company, the price varied from 2.10 up to 2.85 due to the change in the price of both the silicate and the starch. The 2.85 was the maximum price. That is based upon the gross measurements at the press. In fact I wish to state that these prices are all based on those sizes. As to this $2.85 per thousand feet that means two glued [fol. 431] surfaces. The cost per a single glued surface would be half of it. This is on the basis of $2.85 for three ply panels, which requires two glue lines to make; if it would be five ply, it would be twice that or four lines. It is two [p. 191] dollars eighty five a thousand *foot* for two lines or for one line one half of 2.85. From my figures I can *decide* the spread of the silicate of soda glue per pound. A thousand pounds of silicate, one hundred and fifty pounds of starch and one hundred and fifty pounds of water would spread on an average of ten thousand feet, it would vary according to the thickness of the panels which you were gluing up, which reduced back will make about seventeen feet of single line. I mean that a pound of this liquid glue which we prepared would spread about seventeen square feet. As to what that would be with reference to the dry silicate;—well, I never had any dry silicate of soda, it was always in the liquid form. When I say 17 feet I mean 17

feet single ply. The calculations can be made from this statement I have made, the seventeen feet is just in my head here. That means seventeen feet surface, [p. 192] no matter how many ply we put it through. That is mere calculation in my head here, because I have always figured costs as per thousand—per dollars in thousand feet. When I speak of feet I refer to the cost of square feet. The Philadelphia Quartz Company, had a salesman out, to sell the glue. That was over the entire period of time that we used this silicate of soda, but they didn't always have the same salesman. He was offering this silicate of soda for sale generally so far as I know. It is advertised in the papers for sale. It is a special brand made for gluing veneers called Veneer Special. I have seen it advertised in some of the Wood-working journals, veneer journals. As to whether this silicate of soda glue which [p. 193] we prepared was satisfactory for this class of veneers, furniture veneer, the drawer bottoms and backs and so on, the way I can answer that is we got "Repeat" orders on it, the people bought it.

Cross-examination by Mr. Crosby:

I was with the Anderson Tulley Co. in 1911; while I was with them they never used any silicate of soda straight without adding the starch. I have heard of silicate of soda being used straight without any starch. We added the starch to it when the silicate of soda only cost approximately a half a cent a pound and the starch cost round four or five cents a pound; because I thought I could make a product that would sell better. I didn't state to my cus- [fol. 432] tomers that I was using silicate of soda, I told them I was using Allen's dope. I didn't tell them we were using silicate of soda because I preferred to use the word Allen's dope. As to why I preferred to use this, they didn't know what I was using, they didn't know what Allen's Dope was. As to whether I didn't want them to know we were using silicate, I wasn't advertising [p. 194] it. I didn't care to tell them I was using silicate of soda. As to why I called it Allen's dope and didn't use my own name. That was just for the sake—because I was manufacturing it in that way, I didn't know of anyone that was. That formula was not conceived by me. The addition of

the corn starch to the silicate makes a stronger and better adhesive than the use of silicate alone. While I was with them I spoke of selling some panels to the Kroehler Manufacturing Company. Those panels were for the bottoms of couches or lounges. They were for unexposed parts of the lounge, also for the ends. I did not see them put in the ends of the lounges or couches. They bought them as ends. While I was with the Anderson Tulley Company, the company had an inspector to look over the panels that were made. His duties were to grade out such panels as had defects in the face, bad cutting in the veneers, bad sawing, did not come up to size, and [p. 195] also if they were not properly glued. While I was with the Anderson Tulley Company, about ten per cent of the output I should judge went to box shooks, the balance went to furniture. The year and a half that we used silicate of soda adhesive at the Allen Eaton Company was when we first started. That was in the fall of 1917, the plant started, and was used up to the first two or three months I think in the year 1919. During that period we used two adhesive; blood albumen and a little casein. Since then we have been using blood albumen. We have not used any casein since the early part of 1919. As to the cost of the blood albumen that we use, will you permit me to say a word—I have reason for not replying to the question—[p. 196] I am using a formula on which I hold the patent from the United States Government using my own formula. The glue is not sold in the open market and I prefer for my own business interests not to divulge the cost of that glue unless it is necessary. The glue is made by me from the raw ingredients under this formula. (Witness resuming [p. 197] after discussion) I will answer the question; $4.85. That is the cost per thousand square feet of two glue lines. That is, that compares with $2.85 that I gave as the cost of silicate, [fol. 433] Anderson Tulley Silicate Glue $2.85. And that glue, blood albumen glue, which costs four eighty-five, is covered by a patent of ours. That patent is issued and opened to the public to see, and the formula is fully disclosed in that patent. As to whether anyone could take that fromula and go into the open market and find the cost of producing the glue according to that formula; it would be rather hard for them to get the spread per thousand

feet, they could get the cost of producing the amount of glue. By trying and working it out they could get it. As to whether while I was with the Anderson Tulley Company I remember shipping some panels to Jamestown in which the core stock was glued together with silicate, and serious complaint was made about those panels; there wasn't any shipped to Jamestown while I was in the employ of the Anderson Tulley Company. I don't remember [p. 198] shipping some panels while I was with the Anderson Tulley Company to any place in which the core stock was glued together with silicate of soda and the purchaser made complaint thereabout. I will go further, though, and tell you it was while I was with the Allen Eaton Panel Company, if you want to get it correct.

By Mr. Crosby:

Q. You did have such complaints on panels in which the core stock was glued up with silicate, which panels were made by the Allen Eaton Company?

A. Who were they shipped to?

The Master: I guess you can answer that question can't you as it reads?

A. There was a carload of material shipped to the—

Q. I would like a yes or no answer.

(Last question read.)

A. No, sir; I did not.

(Witness further testifies:)

I do consider this patented blood albumen glue of mine better than the silicate of soda mixture about which I have testified. It makes a waterproof glue. It makes a joint that will stand in damp weather and wet, where the other will not, not even Perkins. I used a small quantity of Perkins glue while I was with Anderson Tulley Co. [p. 199] I tested Perkins glue panels which won't stand boiling. I have tried them by boiling. That is what I meant a moment ago when I said not even Perkins would stand moisture. I sold the Jamestown Panel Company a carload of panels of which there was a complaint made as to the

glue. I couldn't tell you whether those panels had the core [fol. 434] stock glued together with a silicate adhesive. I don't know who glued them up. I bought them from Mendel Box Company at Hickman, Kentucky.

Redirect examination by Mr. Macauley:

The blood albumen glue of which I have testified is waterproof. It will stand boiling. In a great many places that is considered an advantage. Referring to the silicate adhesive that we used as Allen's dope, this Allen's dope was just a formula which was given me by the representative of the Philadelphia Quartz Company. [p. 200] I couldn't say as to whether they were distributing this formula generally with their silicate; they gave it to me.

Recross-examination by Mr. Crosby:

The use of our blood albumen glue does require certain different machinery from the use of machinery used with our so-called Allen's dope. More expensive machinery. It is more elaborate in one way and less elaborate in another. The blood albumen glue works somewhat differently than the silicate of soda and vegetable glue. As to whether it requires careful regulation of temperature I would say—no more—not much more so than any glue or in the cooking of any glue. In the regulation of the temperature during the setting of the glue on the wood veneers, it requires—it has a variance of forty to sixty degrees, Fahrenheit. We do use hot presses in connection with the gluing up of veneers with our blood albumen glue.

[p. 201] Shirley D. Taylor recalled and examined by Mr. Macauley Jan. —, 1921:

I have been with the Perkins Glue Company since 1909. During that time the Perkins Glue Company has tried to introduce its glue generally wherever it could in Furniture factories. It has been my duty to introduce it where I could. I am familiar with the prices during that period. As to the price of Perkins Glue from February 1913 to date, I didn't go back that far, I didn't know that you would want it back that far, I just went back to 1915. During the year 1915 the price was eight cents carload, eight and one

half cents less carload ; per dry pound. Then in February, 1916 the price advanced to nine and one half cents per pound car load and ten cents per pound less carload; then [fol. 435] on December 10, 1916—I don't mean December 10, I mean in December, 1916, it advanced to ten cents per pound car load and ten and one-half cents per pound less carload. It remained at those prices until January 1917 when it advanced to ten and one-half cents carload, and ten and three-quarters cents less carload. Those prices remained in force until April, 1918, when it was advanced to eleven and one-half cents per pound carload and twelve cents less carload. In May of the same year, it advanced to thirteen and one-half cents carload and fourteen cents less carload. In June of the same year, it advanced again to fifteen and one-half cents carload, and sixteen cents less carload. Then in July of the same year it advanced again to seventeen and one-half cents carload and eighteen less carload. Those prices remained in force until January 1919. After the armistice was signed the prices commenced to go back and the price was then changed to sixteen cents carload, 16 and one-half cents less carload, and then in March of the same year, it was reduced to 14 cents carload, fourteen and one-half cents less carload. In April of the same year, it was reduced to thirteen cents carload and thirteen and one-half cents less carload. In August of the same year it was reduced to twelve cents carload and twelve and one-half cents less carload. In September of the same year, 1919, that is, it was reduced to eleven cents carload and eleven and one-half cents less carload, and those prices have been in force from that time on and are in force at the present time. Now those prices are the prices you might say that were made to people that did not have contracts. Before the war we made contracts for as long as a period of three years. Now say for instance some concern made a contract with us in 1914 for three years at a certain price, of course that contract did not expire until in 1917, and we were bound to live up — that contract price, but the open [p. 203] market price may have changed in the meantime. At the time the contract was made the price used was the price in force at that time. When the war came on or soon after—that is, I won't say soon after, but after the war had been on for a while, why,

it wasn't safe to make contracts and we discontinued making contracts. While we were making those contracts we would make them with anybody that we could providing conditions in their factory were proper for using vegetable glue. We didn't attempt to go on and tell a man he could use vegetable glue when we knew he couldn't. We offered Hood & Wright a contract at the time our glue was put [fol. 436] in there. As to the West Michigan Furniture Company we have solicited their business. I don't know as I could recall exactly when. During the period from 1913 on I have called there a number of times and our other men called there. During that period we would have been willing to have made a contract with them on the same basis that we made these other contracts provided the time was before the time we discontinued making contracts. As to my recollection of the price of our glue [p. 204] during 1913 and 1914, that is quite a while ago, I wouldn't want to be real positive because our price used to be higher than eight cents prior to some years there. I don't just recall when it did drop down to eight cents. To my best recollection I would say that the price from February 1913 and during 1914, was the same as I have stated for the year 1915, which was eight cents carload and eight and one-half cents less carload. I might state in regard to that price that our prices are all f. o. b. the customer's city, not f. o. b. shipping point, we pay the freight, we allow the freight. The material jumped in price during the years 1916, 1917 and 1918 due to the war.

(This concludes the testimony offered by Mr. Macauley from the Hood et al. case.)

(The following testimony was taken in open court before the Master:)

[p. 205] Richard M. Block, being first duly sworn by the Master, testified as follows (Sept. —, 1921):

Examination by Mr. Macauley:

I am 19 years of age and reside at 352 Rokeby Street, Chicago. I am superintendent at Stein Hall Mfg. Co., Chicago; in charge of the blending and all packing of

small orders. I make some tests in the laboratory. I make all tests for all blended products. I did have something to do with the shipment of a fifty pound bag of material to Kane Manufacturing Company, about August 8th of this year. [p. 206] That was Royal Tapioca. As to how I know it was Royal Tapioca: it came from a bag marked "Royal Tapioca." As to whether I made any test on it; there were three tests made. The result of these tests was—it was Standard Royal Grade. After these tests, the material was sent to the shipping office and I had two seals put on it and two tags put on it, and addressed to the Kane [fol. 437] Manufacturing Company. As to tests to which this stock was submitted: the viscosity test was applied and the color as compared to standard. Other tests the chief chemist made there.

Cross-examination by Mr. Crosby:

I have been with Stein Hall about a year and a half. As to whether I had anything to do with cassava or starches before that: I worked in a laboratory that handles them: [p. 207] Block Chemical Laboratories made viscosity tests on starches there. As to whether I took any chemical course at college or anything of that sore; just the high school course.

Redirect examination by Mr. Macauley:

As to what other training of any kind in regards to such tests I have had besides that I had at high school: I worked in the chemical laboratory for the better part of the last nine years, under Dr. Block. My father is chief chemist at the Stein Hall Mfg. Company. The last year and a half I have been working under him. As to how many viscosity tests I have made during that time I worked under him,—it would be hard to enumerate them. Hundreds easily.

[p. 208] W. J. Seligman, being first duly sworn by the Master, testified as follows (Sept. 27, 1921):

Direct examination by Mr. Macauley:

I am 32 and live at 91 University Place, Brookline, Mass. I am a merchandise broker. My principal lines and those

in which I am specializing are Java products. I was educated in the public schools of Boston and Brookline, then went to Brookline High School and without graduating from that institution, I entered Massachusetts Institute of Technology. I graduated with the usual degree from M. I. T., as it is called. The particular branch of science I graduated in was mining engineering. I have been engaged in merchandising Java products a trifle over 6 years. I have been to Java. I went to Java in the employ of an importing house in Boston, namely: Messrs. Hartman Brothers, Incorporated, and as I was their import manager at that time. I went to Java for the express purpose of investigating and seeing and learning all I possibly could about the source, methods of preparing, packing, shipping and so forth of these Java products which I am selling now. [fol. 438] That included cassava flour, pearl and flake. In my opinion tapioca and cassava are synonymous. As to what proportion of the world supply of cassava comes from Java: I can only answer that question, from memory, and I really don't like to be quoted, but I should say fully ninety-five per cent. The fact is that commercially speaking, the Island of Java is the sole source of supply of tapioca flour. There is some of it which comes from Madagascar but it is insignificant. Pardon me, but I might, if you wish me to, state that some comes from the Malay peninsula, Singapore, and the strait settlements generally. When I was there last, in 1917, I did my best to locate a tapioca flour factory in Singapore, or through the straits around Penang or around Wellesley, but I was unable to locate a single factory. I did visit several cassava starch factories when I was in Java. I did observe the process of manufacturing cassava products, that was the purpose of my trip. As to the process as I saw it there I can perhaps best [p. 210] answer that question, by describing in detail, if you will, the process of one particular factory, because the process is essentially the same in all of the native mills there. It may vary in detail but essentially the process is identical.

In the mill that I have in mind now, to start with the roots, they are first washed in a revolving cylinder: this cylinder is mounted horizontally and the roots dumped in there and rolled around simply to remove the earth

from the roots that collect on them when they are removed from the ground. Then these clean roots are fed to a machine which I call a disintegrator. This machine serves the purpose of grinding up the roots under a flow of fresh water to the smallest particles possible. The net result of this machine anyway: There issues from the under side of it, a white milky liquid; that liquid is then fed on to a screen which is also in the shape of a cylinder revolving, with the axes horizontal. Now I call that a separator. The net result of that machine is this: The large particles of roots, that is, any particle that may not have been completely chewed up, the fibre or a large part of the fibre that runs axially in these roots, very coarse, tough fibre, also large particles of the skin that is on the outside of these roots, is carried off. The part of the stream that goes through that screen, or the milky liquid that goes through the screen consists of everything that is finer than eighty mesh or thereabouts and that is run to settling vats which are nothing more or less than roughly cubical vats, usually constructed of concrete and in these [p. 211] vats the entire [fol. 439] liquid is allowed to settle. I didn't wait to see the vat actually settle, but I understand it takes only from four to possibly at the outside, eight hours. If the run is made towards the end of the day, they allow it to settle over night. The separation is one of gravity; the floating solid bodies in the water and practically the bulk of it being insoluble, the separation takes place rapidly.

When the vat is settled, the clear or reasonably clear liquid on top is run off through holes cut in the side of the vat and there results a pasty mass in the bottom of the vat. A native, usually a woman, then steps in the vat and with a knife—call it a knife—she cuts a chunk, roughly square chunk, out of this mass and sets that chunk up on the edge of the side of the vat. I observed as she did this that she wielded the knife further, cutting off both the top and the bottom of this cake. I observed furthermore that the top—what was the top of this cake—was of a dark yellowish-brown color, some spots of black in it, even on top, and perhaps an inch to two inches deep. The bottom part of this cake was also a much darker color than the center, a yellowish-brown and also deeper. This dark top and bottom layer were thrown together in an empty vat

and the center white part, which consisted of the pure starch, or crude starch, was then either sent to the drying yards direct or was returned to the same disintegrator or a second disintergrator to have the process repeated up to the point where I brought it.

The process of passing the material, whether a center section of the cake or the original roots through the disintegrator, through the separator and to the settling vats, I would call washing.

Some of the mills make only one washing, or two washings or even three washings. I know one mill that makes three washings, and it is a fact that the number of times that this washing process is repeated determines the quality of the product; that is to say; the continued repeating of this washing process not only removes the fibres, small particles of fibres more completely, but it also removes those soluble parts of the roots started with, and any other foreign substance whatsoever, leaving in the vat the pure starch. That is what happens to the center section by these washings up to this point.

They then go to a drying yard which is nothing more or less than a back yard behind the factory. This clean center section is carried on little bamboo trays to the drying yard more or less broken up and they are allowed there to dry in the sun as rapidly as possible. It is also claimed [fol. 440] that the sun bleaches the flour somewhat there, the same way as the housewife puts clothes out on the lawn. The object, of course, is to make as white a flour as possible. This drying, I should say takes from six to eight hours possibly with a good hot sun. Of course if it should cloud up or anything like that, they have to rush it indoors or cover it over, to prevent it from being rained on. The usual process is to cover it over. In fact they have a very ingenious arrangement, sheets of corrugated roofing generally bought in this country and they are generally set up like an "A" tent, [p. 213] or like a capital "A" raised, and if they see anything cloudy the little boy goes between those and puts his two hands out and clamps those two covers right down.

We have now got up to the point where the flour is in dry chunk in the drying trays in the yard. The balance of the process consists simply in passing these chunks through

an ordinary disc flour mill. You don't have to use the disc mill but that is the cleanest type and that is the one most in use.

From the disc mill the flour is generally passed through a 100 mesh coffee screen or bolted through cloth. The over-size from the 100 mesh or bolting cloth goes back to the flour mill and the under-size is packed, marked, and ready for delivery to the exporter.

That, briefly, is the process of manufacturing tapioca flour from the roots. Rejected portions of the material are of commercial use. The first rejected portion is the over-size on the separator or screen directly following the first disintegrator. The oversize from that screen consists largely of particles of tough fibres; this is called by the Dutch, "ampass". It is dried and has two uses. I know of a case where it was used as fuel to run the mill, but its particular use is that of a cattle feed; shipped largely to southern France. Various substances such as dirt are incorporated with that. That is a large per cent of it. The dirty top and bottom which is cut away from the cake of the settling vats, however, [p. 214] contains a rather large percentage of starch and these—shall I say rejected portions of the various cakes from the various washings, go right back to the disintegrator, fresh water is added and the entire process is repeated one or more times making one or more grades of flour which are usually lower qualities than that made from the center section of the cake.

I might say this: Of course when re-washing the top or bottom sections of any cake, some more ampass is made and the center white section from the resultant run is very [fol. 441] much smaller than from the original roots. I understand that usually when re-washing the top or bottom sections of the cake that only one more washing is given and the resultant make is dried as is.

However, when re-washing the center white section from the first settling, very little ampass is obtained if any at all and the second cake contains only very thin dirty top and bottom layers. There is absolutely no chemical whatever employed in the treatment of the starch; it is a physical process from start to finish. As to whether there is anything besides the dirt and this fibre removed during the

treatment;—why surely. Anything which is soluble in cold water will be removed. I understand there is something in the root which is soluble in cold water, but what it is and what percentage it is I have never taken the trouble to look up. Cassava starch does come in a number of different grades on the market. [p. 215] As to what accounts for those different grades, there are a number of things which influence the quality of the resultant product.

First and foremost is of course the process of making it: that is how carefully it is made, how efficient the machinery is, how many times it is washed and so forth.

The other factors which influence the quality are the wash water used, that is very important. It seems that if a very pure water is not used, it is difficult to produce a white color. If there is any iron in that water, particularly, it seems to make a yellow tinge to the flour.

Another minor factor, the nature of the roots due to agricultural conditions in that district. That is to say, there seems to be a slight difference in the product from certain small localities.

I might explain further that each mill buys roots from a little surrounding district; I am speaking now of the native mills. Some mills, of course, grow some of their own roots, but most of them buy them in the market, the larger part of the roots they use. Almost always, the tapioca flour reaches the consumer in the original bag it is shipped from Java. There are, however, certain dealers who—what shall I say—mix various grades and they may put them back in the same bag or put them back in the old bag, but the bulk of it goes to the consumer in [p. 216] the same bag it is shipped from Java. Regarding blending by the dealers, there is nothing done to the starch besides mixing different starches, according to my best knowledge and belief. I can't answer that question on first hand knowledge because there are very few dealers who mix and blend tapioca flours and I have never been in the employ of any of these. As [fol. 442] to what happens to the starch from the factory in Java to the consumer, it is my observation that very few of the factories in Java make starch and carry it in warehouses pending orders. They almost invariably get the order in hand first and then make the starch. Consequently the flour goes direct from the mill to the local railroads,

and then to the exporters at the principal ports. The principal ports are Batavia, Semarang, and Soerabaya. On account of the fact that mills very seldom stock up on flour, there is very little time lost in getting flour from the mill to the port of export. On the other hand, the exporters particularly, speculate in stocks and they may carry a stock there several months before deciding to sell it. Of course you understand these stocks are offered on rural markets and as soon as they are sold, they are loaded either direct at the steamer's side or on lighters. In the case of Semarang, there is no harbor, they have to use lighters to put it aboard the steamer, and then, it goes to the port of destination. It then goes into the hands of brokers, importers or consignees [p. 217] at the port of destination. Then if the importer is on to his job, it is generally sold to some consumer, otherwise it is thrown on the market at the destination; if it is not bought then, it has to go in a warehouse there. I have some diagrams showing the process of drying this tapioca. I have a little diagram here, or pencil sketch of the lay out of the mill which I made on the spot. Starting at the top of page one, we start with the roots and the first disintegrator, where the first feed water is added. The process shows the next step or separated over-size going off to the right as pulp or what I would call ampass, the undersize going to the settling vats. I have called these primary settling vats simply to distinguish them from subsequent washings, but it must be understood that the same set of vats can be used for a secondary or tertiary process, if wanted.

Now I have shown primary from number one going to number two disintegrator. By primary number one, I refer to the center white section of the cake. As to the consistency when it is ready for transfer; as near as I can describe the consistency of the stuff, I would say it is not quite as heavy as putty, but it is not gelatinous. It has this consistency when it is ready to be cut out in cakes. I have the primary number one going to the number two disintegrator with fresh feed water being added from where we proceed to the secondary settling vats.

In this diagram, I have considered a mill that only [fol. 443] washes twice, but if three washings were required,

the secondary number one (or middle white part of the cake) would go to number three disintegrator, fresh food water would be added and the resulting liquor go to the third settling vats.

The disintegrator consists of a cast iron drum, slotted on the surface, parallel to the axis. It is mounted on a horizontal axis. These slots are very close together, perhaps 3 8 of an inch apart. Into such a slot is fed a saw blade very similar to our hacksaw blades and they are fastened in on that drum. This drum revolves very rapidly. I measured one by crude methods and got it at approximately 1500 to eighteen hundred revolutions per minute. Just in back of this rapidly rotating drum is a heavy block which slides, the surface of which is a helix, that is to say, it is wide at the top and curves down to the under side of the drum almost touching the teeth. Directly over the drum and parallel to its axis is the pipe which carriers wash water and the bottom of the pipe is full of holes, so that there is a continual stream or fine spray of water covering the entire surface of the drum. The roots are dumped in there, a basket full at a time as the drum is rotating and the water is coming down on it and [p. 219] it simply flows out on the under side as a milky, dirty water; but the net result of the machine is simply to reduce the root fibre and dirt to a liquid, anything that goes in there; if a piece of basket goes in there it is chewed up too.

Now, usually they had a second disintegrator for a second washing of the first cake. Of course, I believe, if my memory serves me right, the second machine was set a little closer; in other words; it is a white pasty cake that is turned, instead of the hard, tough root, but if it is necessary, the same machine can be used as a matter of convenience.

I believe that I stated in this diagram there were only two washings, didn't I? Then the number one from the second washing in this diagram goes to the drying trays from where it next goes to the flour mill and this 100 mesh coffee screen and so on into the bags.

It will be observed that in this single diagram, the number two, or the upper and lower portions of the cake is sent direct to the drying trays without further washing;

in fact the number two from the secondary settling vats is added to the number two of the primary settling vats, going direct to the drying trays. Such a scheme would only make two grades of flour. From the drying trays onward, the process is identical with the number two grade [fol. 444] as with the number one grade. This scheme can be varied ad lib. according to the number of different qualities desired to make.

(Diagram referred to by witness received and marked Defendants' Ex. 1, Sept. 27, 1921.)

[p. 220] This diagram was made in Semarang, Java. The particular mill I visited at that time was at Tzandi only about fifteen miles from Semarang. As to the effect of washings on increasing the quality of the starch, the more this washing process is repeated the cleaner it gets and the whiter it gets and the nearer it approaches to pure commercial starch, has more body. The word "body" is usually used in the tapioca trade to signify that when water is added to a given weight of the sample and the stuff is boiled in the usual manner of testing viscosity a much higher viscosity is obtained.

Cross-examination by Mr. Crosby:

I went to Java only once. I was there between six and eight weeks in July, August and September 1917. I haven't got my records with me so I can't be sure of the exact dates. I think the end of July until early in September; that would be over, wouldn't it. Perhaps eight or ten weeks.

[p. 221] Regarding the process I described, of manufacturing cassava flour in Java and the diagram I produced and what factory that was; that diagram was drawn immediately after visiting the factory of Lie Loeie Tjin, but the process at that factory in its essentials *were* the same as others. The brands that are made in that factory of Lie Loeie Tjin, at that time, their principal brand was S H B B; they now make L S T number one and L S T number two. As to whether I carefully went through and noted the process with the same detail at any other factories in Java;—yes and no. I didn't note the entire process the way I did at this factory. For example, if I went into

another factory I might only look at one part of the process. It must be explained, to understand this matter thoroughly, that it is very difficult to get into these factories and permitted to nose around and ask questions or touch anything. They all claim they have secret processes, but it is rot. In this particular factory I was even permitted to take photographs, which was a thing unheard of. My Holland friend that had the pull to get me in there was aghast when I suggested such a thing, but I spoke [fol. 445] to the son of the proprietor myself, who spoke English and I made the request and it was granted. As to reasons I gave for making this [p. 222] request; answering from memory I don't remember making any excuses. I simply said I would like to take a snapshot to show my friends when I got back to America what the inside of a tapioca factory looked like. My primary object was to become as familiar as I could with the exact manner in which the roots are grown, harvested, made into flour, how the flour is made, how it is shipped to market, how it is bought and paid for, in fact all the commercial information I could obtain. Besides the one factory which I mentioned I visited those at Bandoeng. I also visited one that was in the process of construction. No others. There were two at Bandoeng. In these two, I made a very brief visit and did not attempt to go into the details of the process at all and I didn't make any record of that, but I think it was the Bandoeng mill and one other I saw. Altogether I went into three factories one of which I have attempted to describe in considerable detail and the other two were to-wit: one, the mill I call the Banthong [p. 223] mill and one other. The brands they make in the Bandoeng mill are Banthong A, Banthong H H, Banthong K K, and more recently Banthong K T K, since early 1918. As to the third mill I am sorry but I don't think I can name it or describe it in any way to identify it. I didn't stop long in Bandoeng. It is a terminal point on the railroad from Batavia to Soerabaya. I didn't want to waste any more time there and it was a very brief and cursory examination. And I may state, the reason I didn't try to make a more careful examination was too, my friends assured me that having the good will of the S H B B mill I had seen the whole works there and there was nothing more to be seen. I am sorry but I can't answer

what brands they make in the third mill. I am more or less—this happened in 1917, that is four years ago when I didn't make any records; I didn't attach any importance to it at the time, so it is gone, I would simply have to guess. As to whether I said the mills didn't make up this flour from the roots until they had orders for it, I said "usually"; that is not always the case. The roots are kept while the mills are waiting for orders to make them up into flour; usually in the ground. May I modify that. When you say, "Where are the roots kept?" if you refer to tapioca roots in general in Java of course my answer is [fol. 446] what I meant it to be. If you refer to roots already [p. 224] purchased, that is, they have been dug up out of the ground and purchased by the mill, they are probably kept in a bin near the mill, but it was my observation and the best of my knowledge and belief, that tapioca roots are not kept in the bins very long by the mills. If they have roots on hand dug, I believe they prefer to market them or make them in flour. A large percentage of the roots are not grown by the Chinese natives. A large bulk of the roots are grown by the Javanese natives. These natives have little small patches of their own for growing roots in. You understand, some of the large mills grow roots themselves, for example, the Soomiajoe. As to whether the roots which are grown by these various natives in patches; is it not true, they harvest them, that is, take them out of the ground and hold them around their little shanty or place of abode until they can sell them to the mills,—that isn't my understanding. We must not overlook the fact that primarily the tapioca root is an article of food for these natives. They have gotten so now, they prefer rice but the root is still grown as an article of food and during the war with Siam when rice was embargoed and they couldn't get rice for the natives in Java, the Governor General even prohibited the grinding up of the roots for flour so the natives could have enough roots to eat. Now the chances are, these natives that have these little patches may have a basket of roots on hand, but the chances are, that basket [p. 225] of roots is held available for the local vegetable market, not for the tapioca mills.

The commercial fact is this: when the mills are paying a good price for the roots they are dug up in large quantities

and it is astounding what quantities of flour the mills can turn out, when there is a good market for it. When there is a poor market for the flour which permits the mills to pay only a low price for roots, the roots stay in the ground. It therefore happens that say some years when there is a poor market, the roots stay in the ground for longer than usual. In other years when their market is good and the mills are willing to pay higher prices, the roots are plucked from the ground just as soon as they are big enough to make flour of. As to whether the age of the root, the length of time it has remained in the ground has a good deal to do with the quality of the flour; that is a question that I can't answer from first hand knowledge but my best [fol. 447] understanding and belief is this; that the best quality of starch is made from roots that are about eighteen months old. Prior to that time or after that time the quality may or may not suffer, the quantity does suffer; in other words, the older these roots are the tougher these fibers grow inside of them and the weight of starch [p. 226] obtainable from a known weight of roots is lower. I spoke of some cassava starches or flours being of lower quality than others. By lower quality I mean they are darker in color, contain more of the fibrous matter, possibly there are foreign materials such as soluble parts of this root that are not washed out by repeated washings and generally they have less body as we call it; that is, when cooked up or tested, the resulting product is less viscous. The flours of course have no viscosity, but the product obtained by testing them in the usual way would have a viscosity—that is, if two flours were tested by placing a given quantity of each in the same quantity of water and I make a very thin adhesive liquid by heating them up and then those two separate liquids are run through a device perhaps called a vicosimeter, something perhaps in the form of a cup with a small opening in it, and allowed to run out, you will find that a given quantity of one liquid will run out more quickly than the other and is therefore said to be less viscous than the other—that is substantially correct, so when we speak of differences in viscosity, we mean difference in viscosity of the starches when subjected to such a test as that. I might point out that it doesn't always follow that the whiter the starch the

higher viscosity [p. 227] is obtained when the starch is tested. Some of the exceedingly white starches test low in viscosity. That is due to the fact that certain mills may not have a proper wash water with the result that although they have a good starch body the color is not as white as some others that have less starch body. I do not mean that some of the very white starches are quite low in viscosity. Everything else being equal—I never heard of chemicals being used in these factories or plants in Java in the wash water they used to wash these starches with. I can not recall whether I ever heard anyone mention any such thing. As to whether there is anything poisonous in the cassava root, I have heard it said that the cassava root contains a small amount of prussic acid. I heard it rumored in Java that the natives say not to eat too many of them. The Europeans don't as a rule eat them, only [fol. 448] the natives, and whereas it is not a thing that is deadly or anything like that, nevertheless I was told when I was there that if too many of these roots were eaten you are liable to get sick. As to whether any portion of the root that contains poison is eliminated by the process I described, I have not gone into the chemistry of it. It depends on what condition that acid is in, whether it is in a soluble condition or insoluble.

[p. 228] As to whether my concern sells these tapioca products for food purposes, the two firms that I have been with sold tapioca flour; sold them in the general way in this country of which only a small quantity of these flours are sold for food purposes. I must modify that statement by the fact that during the war, when we had no wheat, they shipped a very considerable quantity of the tapioca flour which we sold for food purposes. As to whether very considerable quantities of these cassava products were sold by my firm for sizing purposes such as sizing of paper and also for the making of mucilage;—it is not my understanding that cassava flour is used to any great extent for either of those purposes, that is sizing paper or making mucilage. It is used for sizing other materials; it is used for sizing cotton cloth, textiles. How large a part of our sale was sold for that purpose I can't say. I can't always tell for what purpose the flour sold by me is used for. I may sell it to the dealer who in turn sells it to the con-

sumer, so I never know the ultimate use of the major part of my sales.

Redirect examination by Mr. Macauley:

When I refer to the roots being kept in the ground I mean they are simply not harvested, they are kept on growing. I have seen cassava that I was informed was several years old, perhaps five or seven years, the stalks were ten feet high, way over your head. As to whether they have [p. 229] a regular harvest in Java or the plants grow at any time of the year; the plants are continually growing and whereas some part of the year is usually chosen, namely the dry season for harvesting roots, there is no regularity about it. The temperature in Java varies with the latitude. I should say that at the seashore perhaps the lowest temperature that is experienced would be 68 to 70, possibly up in the mountains at night it may go down to 58 to sixty, but that is a guess only.

[fol. 449] JOHN ERICKSON, being first duly sworn by the Master, testified as follows (Sept. 27, 1921):

Direct examination by Mr. Macauley:

I am 43 and reside at 66 East 13th Street, Holland, Mich. I am superintendent of the Holland Furniture Co. I have been superintendent since the first of January 1921. I do recall that sometime in perhaps August, Mr. Grossman or Mr. Kane asked me to send over some of the Kane product [p. 230] that we had on hand. I think it was a little earlier than that. It must be possibly over two months ago. I sent them some. I got this material from the regular supply of Kane vegetable glue. I sent them 100 pounds. It was just a partial bag. We took part of the starch out of one of the Kane bags. We packed it and sent it by boat to Chicago, Graham and Morton Line I think. The bag was marked "Kane Manufacturing Company" and their address in Chicago. That is all I remember.

Cross-examination by Mr. Crosby:

This Kane vegetable glue material was a dry vegetable glue material, the flour from the bags we had received from

them. As to whether it was just like all the other, or substantially all the other Kane glue material we had from them; it was what we call regular glue we received. The [p. 231] regular glue material which we had from them was all the same.

CHARLES KIRCHEN, being first duly sworn by the Master, testified as follows (Sept. 27, 1921):

Direct examination by Mr. Macauley:

I am 45 and reside at Holland, Mich. I am general manager of the West Michigan Furniture Co. Sometime last summer, we did receive a request from Mr. Grossman or the Kane Manufacturing Company to send them some Perkins glue. I sent them a full sack of the glue. About 180 pounds as I remember it. That sack was not marked; just the usual glue we received from the Perkins Co. Their usual mark was on it. We sent it, as I remember it, by Graham and [p. 232] Morton boat. It was a bag of the regular run of Perkins Glue. So far as I know it was not any different than any other glue. This bag had not been [fol. 450] opened and we did not open it before we sent it.

Cross-examination by Mr. Crosby:

We bought that bag from Perkins Co. probably, I think in July. It was part of one of our regular orders from them. I don't know the date of that order, but I believe I could find out for you; I believe it would be somewhere about the middle of July I think. We put in orders for Perkins Glue during the last few months, something like every two weeks I think. I couldn't say off hand which order that was, I dare say the record might show it. We received that from them shortly before I shipped it, possibly within ten days of the time I shipped the sack. We shipped the sack the latter part of July as I remember. From that I would say we received the Perkins glue about the middle of July.

[p. 233] C. Gordon Wilson, being first duly sworn by the Master, testified as follows (Sept. 27, 1921):

Direct examination by Mr. Macauley:

I live in New York; my office is 17 State Street. I have no permanent address at the present minute. I am manager of one of the divisions of Henry W. Peabody and Company, international merchants. I am manager of three divisions. We handle general food products, tapiocas, cigars, reeds and rattans and miscellaneous lines. I have had to do with tapioca starch approximately 7 or 8 years. I have been with this firm 12 years. I was in Java in 1919 approximately six weeks. I went there to generally inform myself on the commodities which we bought from Java, that is, production and preparation, and also to seek the best correspondents we could for trade. Those commodities included cassava. I do regard cassava and tapioca as the same. As to the extent I investigated the manufacture of cassava stock,—in the first place I inquired of our correspondents as to what would be the best way to get first hand thorough knowledge of the entire production of cassava flour and other tapioca products, that is, pearl tapioca and flake tapioca, used for other purposes, and was informed by them that with the exception of what is called H. V. A., Handel, Veeringen, Amsterdam, all of the other mills conducted their manufacture under more or less the same plan. [fol. 451] This exception, the H. V. A., it was not possible to discover what their process was, it was kept secret. Under these circumstances I only visited two mills hearing that they would serve to demonstrate the methods employed in manufacturing tapioca products. This idea was substantiated by everyone who was connected with the business whom I interviewed, which were many. The mill I investigated most carefully was Hay Hap Liong Kie. They are located in Bandoeng and manufacture principally at least, Banthong A, Banthong H. H., Banthong K. K and Banthong K. T. K. In addition to that, they make about ten other grades of other edible tapioca products. As to the process I saw in use there, the flour is made from cassava roots which I should say average around a foot to four feet in length, some of them mammoth affairs. These were brought in to the factories in small two-wheeled carts

drawn by caribou, they are like a big ox, very large and powerful. They are brought to the plant and there the natives peel the outside skin from these roots with knives. After the roots had been [p. 235] so prepared they were put into a hopper which conducted them into a machine, a grinding machine, and water was also flowed through this same machine, so as they were grinding they were mixed with water and flowed out from this machine in suspension into big vats or tanks. When the tank was full, the flow was cut off and it was allowed to settle, and due to the difference of the specific gravity of the various components which make up tapioca, the separation took place, of the various components of this cassava flour in different layers. The water and extraneous matter such as dirt would come to the top, next would come the starch and under that would come a mixture of fibrous matter and starch which was mixed up with this extraneous matter. Then after this separation had taken place—I don't recall how many hours it took to separate it, but after the separation had taken place, the water was drawn off the top and then the top layer was scooped off with shovels and next came the starch which was scooped out and then the bottom layer was scooped out. These four or rather three layers were kept separate. If the manufacturer was desirous of making a very high grade of flour the middle layer of starch was simply put through the same process again which resulted again in three layers, and then in this second process the layers of extraneous matter were much thinner there being [fol. 452] a greater proportion of clear starch. This process could be repeated again the third time resulting in a still higher grade of flour. [p. 236] By clear starch I mean cassava flour. I would simply say it was tapioca flour, commercially. The layers at the top and the bottom of the tank were also rewashed and from the rewashing of these two layers second grade flours were obtained by the same process and so continued until they got practically in this particular plant, four grades of tapioca flour, the absolute residue being ampass, which is to the best of my knowledge not proper to this question at all; simply sent to Europe to use domestically for cattle.

This flour is at that time in mud form, what I mean is about the consistency of mud, is taken out in the yards and

exposed to the sun where the water evaporates off and leaves it dry there. It is broken up into flour constituency and put into bags and shipped. As to whether there is any other product in this process except the different flours and the ampass; yes. That is, I would qualify it this way; that this flour is sometimes manufactured into what is known commercially as pearl tapioca and also as flake tapioca for human consumption. I don't know what is the difference between this flour and what is known as cassava starch. Commercially it is termed as flour. As to the history of the flour from the time it [p. 237] leaves the factory till the time it gets to the consumer; so far as my own experience goes we conducted our business probably a little bit differently than most of the merchants engaged in importing tapioca products. We obtain an order from a manufacturer here, send it by cable to Java and there it is accepted or changed in specifications to suit the manufacturer and cabled back to us. The deal is eventually closed by coming to a common understanding as to the details as to quantity, quality, time of shipment and price. The manufacturer then makes up this flour in accordance with our specifications and when it is ready for shipment and the freight and space has been engaged it is taken down to a port by railway cars, put on to an ocean ship and brought to such a port as designated, usually New York, sometimes Baltimore, Boston, Philadelphia, occasionally San Francisco and Seattle. There we take charge of it and put it on the railway cars and it is shipped direct to the buyer in this country. It comes in bags of approximately 200 pounds. We don't open the bags, we simply pass them on. To the best of my recollection all orders [fol. 453] come in terms of tapioca flour, although if a man should write in wanting cassava starch I would interpret it he wanted cassava flour.

Cross-examination by Mr. Crosby:

[p. 238] I spoke about visiting only two mills, one the Banthong mill in Bandoeng, the other mill is a bit hazy in my mind at the present time but I think that it was the Lie Loie Tjiek. (Witness produces paper) I refer to these notes, it is not possible to remember these combinations of letters. I am not sure it was that but it is my recol-

lection that was the mill. The mills didn't claim to me they have a secret process—I said with one exception, which was the H. V. A. all the processes were generally the same. I did not endeavor to see the processes carried out in any other mills beside those two. I did not analyze any of the wash water used in the process to see whether it contained chemicals. As to whether the factories there buy the roots and more or less stock up on the roots or did they buy them only when they have orders, as they have orders to fill; from the appearance of the mills I saw no large stocks around at any one time. I suppose they buy them more or less as [p. 239] they use them. As to where are *are* these roots while the mills are waiting for orders to come in to use the roots; why I presume most of them are left in the ground in the growing stage until they are called upon to sell them. It wasn't the habit of a native Malay to raise these crops to exercise himself much or stock up to sell anything. Malay and Javanese are both engaged in it commercially. They are both distinct races. It is my understanding these roots are left in the ground for a varying length of time. I don't know how long, whether the maximum time or the minimum time. I don't know whether the age of the root has anything to do with the quality of the flour. We don't buy any of this tapioca flour in Bandoeng. I saw no evidence of chemicals being used. I can't recall of ever having any business transactions with the Kane Manufacturing Company at all. I don't think that we [p. 240] ever sold them a thing. My statements with regard to what may have taken place in the process of other factories and mills besides the two I visited is based entirely upon hearsay statements made by other people I saw, if I may be permitted to qualify my answer. I didn't mean to try to confuse the question. I made a specific point to gather inquiry from disinterested parties who were [fol. 454] engaging in commerce of the tapioca products. I inquired in Semarang and Soerabaya, three firms and Batavia of four firms as to whether or not the process varied in different mills which would make it necessary for me to see more than one mill to gain what I wanted in the way of information. It was based upon the statements of independent merchants who had no connection with these factories or interested in them in any respect. I don't

know whether they had been in the mills or not. I didn't inquire whether they had ever been in the mills or not.

Examination by Mr. Macauley:

[p. 241] My attention has been called to another place I visited, to Jo Soen Bie. They make J. S. B. and B. J. It is a very small factory. I have very seldom seen the product of that concern here.

Examination by Mr. Crosby:

I don't know whether they make any other brands. Those are the only two brands I have ever heard of, of theirs. They buy their roots from the surrounding territory. Most of the mills there as I understand it, depend on the immediate territory for the supply of their raw products; they don't carry them any great distance. You will find them raised twenty-five or thirty miles around because they are brought in by these ox carts. I did see the natives preparing the roots before they went to the mill. I saw them harvest them in the field.

Examination by Mr. Macauley:

As to why the grades made by this mill differed, I [p. 242] suppose the grades simply differ according to the number of washings that they have had and the pureness of the water. In some districts it is not possible to get as clear and clean a water as it is in others, and therefore no matter how many times they would wash it, they wouldn't get as white a flour as they would in districts where very fine, clean water is obtainable. The number of times it is washed would very materially effect the viscosity. The more it is washed of course the freer it is from fibrous matter, but whether that allows it to absorb more water or less water of course I am not a chemist and I can't say. It might be true that if a mill had a nice clean looking water they might obtain a nice white starch with very few [fol. 455] washings, whereas a mill that didn't have such clean water even though they washed it several more times might not have such clean looking starch. Using the same water the quality of the starch would undoubtedly vary according to the number of washings. Clear water as against poor water only effects the color, not the quality.

M. A. GROSSMAN, being first duly sworn by the Master, testified as follows (Sept. 27, 1921):

Examination by Mr. Macauley:

I am the same M. A. Grossman who testified at the trial. I have been with the Kane Mfg. Co. from 1918 to date. In the year 1915, upon my graduation from college, I entered the employ of the Solva Waterproof Glue Company who at that time were manufacturers of a vegetable glue, and I remained in their employ except for a short time when I went down East to work upon another colloid proposition. I will also state that during the time I was working on this colloid proposition in the East I was continuing my research work on starch and glue, which researches resulted in the manufacture of the Kane product today. As to the effect on the viscosity or water absorptive qualities of starch by repeated washings; the effect of washing starch or flour, as I might term it, is to remove water soluble material together with fibers which will settle out, resulting in a purely carbohydrate base which when relatively dry, say ten or twelve per cent, will tend to increase the viscosity or body of the starch and allow it to absorb greater quantities of water. The viscosity of the starch tends to show the size of the particles or molleculiar aggregates in the flour; also by this, it would show the water absorptive quality of a particular [p. 245] flour. I base this information in regard to the effect [p. 246] of washing on starch on actual chemical analysis. I took a sample of cassava root which was furnished me in Boston. I ground the root to a powder to make it into what is called cassava meal and then took portions of cassava meal and put them under a chemical analysis to find out what the original meal contained. I made the analysis of the crude fibre, protein content, water soluble and in one case alkalinty of ash although it had no bearing on this case at all; I merely wanted to know the condition of the ash and I found some [fol. 456] very striking results in the analysis as compared to tapioca flours which came on the market and also in regard to flours which I made from the root by washing processes. I followed as carefully as possible the literature which I had read, which I testified about in the last case, also information which was given me by the two wit-

nesses who were on the stand today and they gave me the actual experience as they saw it in Java, and I got very striking results both in analysis and in tests on the viscosity. I retained samples of the meal, the material which I washed out as the insoluble matter as fibre, also the results of a number of washings; I have them here in my bag.

I have here a bottle marked "cassava root, dry"; I have any number of them here but I just put one in the bottle. This first bottle shows one particular cassava root. I saved this one because it happened to be a whole root and shows the shape of the root, a small amount of bark on the outside and you can see the starch in it. This next bottle shows ground cassava root. The first bottle is marked cassava root dry.

[p. 247] (Said first bottle received in evidence and marked Defts. Ex. 2, Sept. 27, 1921.)

The next bottle is marked "Ground Cassava root." It should be marked meal, I think. Meal is the root ground up, nothing else; just took the root and ground it up.

(This second bottle received in evidence and marked Defts. Ex. 3, Sept. 27, 1921.)

This next bottle is marked "Fibre and other impurities, saved from early washing of ground root." That is the fibre and other material. For instance, there might be a small amount of starch adhere to it, left over. I believe there must be some because I didn't grind the material fine enough to extract all, and even in France they never extract all. The literature shows about fifteen percent of the starch in the ampass. That is why it is used as a cattle [p. 248] food in France. This corresponds to ampass.

(This bottle received in evidence and marked Deft.'s Ex. 4, Sept. 27, 1921.)

The next bottle is marked ground cassava root after nine washings. In reality, it is flour now. It is the ground cassava root which remains after the dirt and whatever is [fol. 457] soluble been washed out in nine washings. I will explain that in further detail after I get through with these samples.

(The bottle received in evidence and marked Deft.'s Ex. 5, Sept. 27, 1921.)

The next sample is ground cassava root after twelve washings. In the early washings, I saved a small portion of the water for analysis of the water soluble. I want to explain that the laboratory method of making this, would be such harder than the factory method because of the small quantity of root that I had and the manner in which I could sieve the material and the way I could wash it and settle it, so instead of giving it three or four washings in order to make a grade of flour, I called this the number of washings but really it wasn't so, it is simply the number of times I would draw off the water. That is, [p. 249] I had to make more of what I call washings because I did it by the hand method, and let it settle a while. In the factory which has been described here today it would be possible to make a constant stream of water play upon it which would carry off the water soluble matter more easily.

(The last sample received in evidence and marked Deft.'s Ex. 6, Sept. 27, 1921.)

After grinding the cassava root—I ground it first in the coffee grinder by breaking the roots up into small chips and then between two pieces of wood by pressure so as to break it down into as fine a particle as possible; that is why the fibre shows in such quantities, and that is why I believe and I know there must be quite a bit of starch in the fibre.

I took an ammount of cassava root, put it in a fine silk bag and put it under running water, allowing the milky solution to be caught into a container. I washed until the milky color was disappearing and became clear, when I allowed the solution to settle. I then decanted off the supernatant liquid and found at the bottom of the container a pasty starchy mass which had with it some fibrous material which escaped through the silk.

I continued the process of washing and settling, stirring up the starch sediment each time and allowing it [p. 250] to be settled again, the purpose being to remove as much of the water soluble material and the fibre as possible.

[fol. 458] The early washings were carried through until I had a fairly large amount of starch at the end of the 9th washing. I will say that at the end of the 15th washing I took a sample, dried it in the usual laboratory method for drying starch, between one hundred and one hundred ten degrees Centigrade, to remove the water. I had a starch of ten percent moisture content I ran a viscosity test of this sixth washing starch, properly dried, to see how far I had purified the starch. I found in this laboratory method that at the sixth washing I still had what I considered a low viscosity starch; low, not because of the chemical treatment but low because sufficient water soluble material and fibrous material still remained which had an effect on the viscosity of the starch. As to how did I know about the viscosity of this starch after the 6th washing; as I stated in the record, the sample was drawn—it was only necessary to take about twenty grams—the sample was drawn and as stated, dried at a temperature of between 100 and 110 degrees Centigrade. I then ran it along side of our regular Kane base—I ran the viscosity test, along side of the Kane Base to see what the viscosity of the [p. 251] starch was. I finally decided that at the end of the ninth washing I would draw a wholesome sample. I then continued washing the remainder of the starch successively until the 12th washing when I drew another sample. As to what I did with the sample last, this sample was dried as described before at 100 to 110 degrees Centigrade until it had a water content of about ten per cent moisture. I next washed until I had a total of fifteen washings when I decided that the experiment had gone far enough and I drew again the major part of the sample and dried it in the manner described before. I did the drying between 100 and 110 degrees Centigrade. Wait a minute, I beg your pardon; that would boil it up. I mean Fahrenheit; you asked me about Fahrenheit and I turned around and said Centigrade. I should say the sample took about 8 hours to dry. I made viscosity tests of the sample which I have here of the ground cassava root after nine washings, twelve washings, and fifteen washings, along side of the Royal Starch which was tendered me by Stein Hall Manufacturing Company, the Perkins Glue Company base which was tendered me by the West Michigan Furniture

Company and the Kan[illegible] Glue base which I requested the Holland Furniture Company to submit to me. Along with that I ran a test of a lower grade of Cassava flour known [fol. 459] in the trade as K. T. H. brand and I [p. 252] would like to make these experiments here if possible to show the Master just how a viscosity test is made and what the comparative figures would be between the viscosities of these particular washings and the various starch bases which we have.

I also made analysis of the ground cassava root, the sample after nine washings, twelve washings and fifteen washings. The results on the protein of the cassava root ground is .64; in other words, sixty-four hundredths of one per cent. On the ninth washing I reduced the protein to .24 or twenty-four hundredths of one per cent. On the twelfth washing I reduced the protein again to .14, or fourteen hundredths of one per cent. On the fifteenth washing the protein had been reduced to .09, or nine hundredths of one per cent. I analyzed the water soluble content. On the ground cassava root it ran 1.67, on the ninth washing it was reduced to .20, on the twelfth washing it was .19 and on the fifteenth washing it was .12.

Now the ash. The ash content ran 1.02, that is on the original ground root. On the ninth washing it went down to .18, and on the twelfth washing to .14, and on the [p. 253] fifteenth washing to .10. I suppose the ash is sodium and phosphorus compounds and the like. Commencing on the crude fibre the original cassava root grown ran 1.67; on the ninth washing it ran. 367; on the twelfth I lost my data for that the sample must have spoiled, and on the fifteenth it ran .30. As to how I account for the fact that on these repeated washings I find diminishing amounts of protein, solubles and ash;—well, take the water soluble, it is just natural that when it is stirred up in water a certain amount of it will be carried off in the wash water. In regard to the protein a certain amount of it will be held back by the silk bag. In regard to the ash there is a certain amount of ash in protein and probably a very small portion of ash in the water soluble. The amount of protein has got a bearing here to this extent; we are interested in the pure carbohydrate and the protein which is a nitrogen material, is not carbohydrate and is inert and therefore doesn't take any

part in the reaction, and the purpose of removing that protein would be to get a starch base which is as pure a carbohydrate as possible. As to the circumstances under which I obtained the material from Stein Hall, in the ordinary run of business, we have on hand samples of every cassava [fol. 460] flour which is tendered us by brokers and we even carry samples of starch cassava flour bases which come in in every carload which is for record. To avoid any controversy [p. 254] and to make sure that I would have as true a sample of each particular base as was possible to obtain, I decided to go to the source and get fresh samples, so I communicated with Stein Hall in Chicago and requested their sales manager to send to our factory as promptly as possible a fifty pound sack of Royal tapioca and to be absolutely certain it was tested and checked in their place as being Royal tapioca flour such as they could vouch for. At that time I didn't know whether it would be necessary to have someone here to vouch for that particular material, so I told Mr. Leverone, their manager, to give me a certification properly sworn to by a notary that it was Royal brand tapioca flour. I had no shipment of that size (50 lbs.) from Stein Hall before, we buy it in considerably larger quantities. There could be no question that this shipment that I received, this fifty pounds, was what I had ordered of the Royal starch for this purpose. It was marked. First of all it was sewed in the regular manner, and in the center, say four inches apart, were two seals such as they place on railroad cars strung right through the bag at the sewing, and this sealed with lead slugs. The seals are marked number 4675 and 4676. [p. 255] The bag was opened in the presence of Mr. Epstein and myself the first time. Mr. Epstein who is sitting beside you at the present time, Mr. A. K. Epstein. I next called on Mr. Evert Stephan of the Holland Furniture Company to submit to us a sample of the regular Kane Glue base which they use in every day work in their plant. My purpose in requesting one of our customers to return to us some of our glue base was to dispel any thought in the mind of either Mr. Epstein or myself that we would be tendered a glue base which might be claimed to have been mixed, blended or treated in any way. This bag came to us from the Holland Furniture Company by Graham Morton boat, being shipped on July 25 of this

year, 1921. A tag was attached to this shipment marked "Sample of regular glue used daily by the Holland Furniture Company, received from Kane Manufacturing Company, 1832 South Clark [p. 256] Street, Chicago. Specific instructions were given to the foreman of the factory—at our factory, that a shipment from Stein Hall Manufacturing Company, Holland Furniture Company, West Michigan Furniture Company was expected and that under no con- [fol. 461] sideration was it to be opened except by myself or any others who might come with me. Orders were given to place this material in a locked room the key to which no one had except the foreman and when Mr. Epstein and myself first examined the bags none had been opened or tampered with. I next called upon Mr. Charles Kerchen, an officer of the West Michigan Furniture Company, at Holland Michigan, to send me a sample bag of the Perkins Glue base for work along the lines which I intended carrying out and a bag was received at our factory which had been shipped by West Michigan Furniture Company on July 26th and presumably received shortly thereafter. The bag was marked in black ink as follows: "Number 183" on the first line; second line, trade mark; third line "Reg. U. S. Patent Off." Next line, "license for use." Next line, "Under process patents, [p. 257] Perkins Glue Company." When all three bags were in the factory, I communicated with Mr. Albert K. Epstein, Consulting Chemist, and notified him of the arrival of the three bags. I requested him to be present to draw samples both for his use and my own in making experiments which we wished to tender in court and for our own information.

On July 27, Mr. Epstein called at our factory and together we drew our samples. I gave Mr. Epstein—do you want me to tell what I gave him, three bottles. I gave Mr. Epstein one two quart Mason jar and filled it with the Kane Glue base. I labeled it "sample of Kane Glue base from sealed bag originally from Holland Furniture Company" submitted by Kane Manufacturing Company and signed with my name. This is the sample of Kane Glue Base signed by myself and was sealed across the top. There is part of the label still on showing the front part of my name and the last part of my name.

(This sample received in evidence and marked Deft's Ex. 8, Sept. 27, 1921.)

I next filled a jar of the same size and shape with material from the West Michigan Furniture Company and labeled it as follows: "Sample of Perkins glue base from sealed bag originally from West Michigan Furniture Company, submitted by Kane Manufacturing Company." signed "A. N. Grossman." This is the jar of Perkins Glue base which I filled and labeled as just mentioned and across the top it also has [p. 258] the binding, sealed with my full name and [fol. 462] the date of which it was tendered.

(This jar received in evidence and marked Deft's Ex. 9, Sept. 27, 1921.)

I then filled a third container of the same size and shape as the other two, with the Royal Tapioca flour from the sealed bag and marked the label as follows: "Sample of Royal Tapioca flour from sealed bag originally from Stein Hall Manufacturing Company, submitted by Kane Manufacturing Company," signed "A. N. Grossman." That is the jar of Royal Tapioca flour which I filled with this flour and it bears a label signed by myself. It also bears part of a label which was over the top and I can see my first initial of the name there.

(This jar received in evidence and marked Deft's Ex. 10, Sept. 27, 1921.)

[p. 259] Regarding tests which I propose to make before the Master the purpose of the viscosity test is to measure the rate of flow, the size of the particles, and these figures will act as a measure of the water absorptive properties of any particular starch flour base. If starch has been degenerated, the water absorptive property will have been reduced by those processes and the viscosity test will be a measure of the rate of flow for the starch, and therefore will show whether or not the starch has been degenerated. The less refining a starch receives, the lower will be its viscosity, and the more refined the starch is which means the elimination of the impurities and the greater amount of the pure carbohydrate, the greater will be its viscosity. [p. 260] The refining process in the course of the manufacture tends to remove water soluble content. That is by the washing process. As to what effect has the viscosity on the glue making qualities of the starch;—viscosity is a

means of identifying comparatively the quantity of water which can be used with any particular cassava flour base. As to what limit is there to the amount of water to — used in glue; there is no limit. Depending on the quality of [p. 261] the work and the manner of its application, the manner of the application of the glue, I can adjust the condition to make the glue with one and a half parts of water, two parts of water, three parts of water, and if necessary four parts of water and still get a good glue paste. It is a question of ex- [fol. 463] pense to a certain extent. In the experiment which I conducted in January of this year for the Holland Furniture Company and to which I testified before Judge Sessions we ran samples at various water absorptive—I don't say in that way—with various amounts of water and got excellent results as high as four to one; in other words, we took the various water contents and tried to find where the limit was, and at four to one we didn't find the limit. The spread will be increased by the amount of water but to purchase a glue base for cassava flour which will absorb a greater amount of water, you pay a higher price and one will offset the other. Off the record I may enlighten the Master by saying Mr. Crosby asked me in the case before Judge Sessions why we didn't continue to purchase or sell a glue base with that high water absorption. I told him the market conditions were not such as to make it possible [p. 262] with the case of cassava flour which would hold that amount of water, were such that it was prohibitive at the time. In view of the moral effect, going in to a man and quoting him a certain price on vegetable glue, if you tell him, I have a glue with a higher absorptive water proposition but it will cost more money, he will drop it. He only thinks in terms of cents and half cents.

Cross-examination by Mr. Crosby:

I did analyse these various samples for protein, according to the regular method as described in Bulletin 107. Describing the method I used; to obtain the water soluble content you take a certain specific amount of starch, after it is washed and it having been dried, and you wash it through filter paper a number of times to extract from this specific dried sample the water soluble content which remains. You then dry—boil off slowly the water con-

taining soluble material and weigh it. You weigh it after it has been dried at 100 degrees Fahrenheit and that is the water soluble content for five grams. You then figure what it is in per cent. As to where the protein comes in; the protein is another analysis. The protein is run by [p. 263] the Gunning method. In analyzing for protein—I took a weighed sample of the dry starch after a certain number of washings, put it in a flask with caustic soda and mercury and put it over a Bunsen burner and let it digest after which it is distilled over into a flask containing a specific quantity of tenth normal acid;—hydrochloric acid: The purpose of this is to distill over the nitrogen in the protein, [fol. 464] and then titrate back the excess acid. You calculate the amount of actual nitrogen as ammonia and then by the table you calculate it as protein. The word "digestion" is simply an assimilation, so far as any process is concerned, the completion of the process, the incorporation of the three items, flour, caustic soda and mercury. Mercury doesn't take part in the process, it is merely a carrier. As to how I happened to lose my data with regard to one of these samples which is indicated on the label as ground cassava root after twelve washings; the particular flasks which are used in the nitrogen distillations have the shape of a cylinder with a long drawn out neck and they are very susceptible to temperature changes; I haven't been able to get the perfect glass we had, and by having my Bunsen flame get too close in contact with the glass and it got damaged, cracked it and as a result all my liquid escaped and in my [p. 264] haste to do other work I said, "Oh, well, let it go." As to whether I took viscosity tests on those labeled samples offered in evidence, I checked them at that time, but upon consultation with our counsel, Mr. Macauley, we decided to run them in the regular routine at the hearing here and give the actual figures at that time. I can't tell you what the viscosities of those various samples were until I explain this, it bears upon it. I described the method with which I made my viscosity tests before Judge Sessions and I want to qualify myself here in order to go into detail.

These are comparative results of the number of seconds it takes to flow through a tube of a certain length and a certain size orifice. There is the action of caustic

soda on the starch sol. ion which we will make up tomorrow; it depends entirely on the length of time the caustic soda is in intimate contact with the starch solution. If I take the results after the first hour I will get a certain set of figures for each sample which will vary according to the viscosity of the starch. If I allow the caustic soda chemical to eat two hours the result will be a lessening of the number of seconds but comparative again for that set of figures for the second hour. If I continue it on for the third hour I will get another set of figures where at all times they will be comparative. [p. 265] As to what readings I got for viscosity on the samples offered in evidence, I haven't that data before me unless you want me to recollect. I also have not got it with me for protein. I did not bring it. I can not remember what they were as well [fol. 465] as if I could read it off my book. As to who told me not to bring those with me,—I wasn't ordered to bring them with me because we decided we would run these tests before the court and therefore give the figures at that time. No one suggested to me to leave those records in Chicago. When I was describing the samples of cassava flours which I have offered in evidence here I was reading from notes,—some from paper and some from my own book. As to two sheets, the size of letter paper, here is one from Stein Hall—two from Stein Hall, one from Holland Furniture and one from Charles Kershen of the West Michigan Furniture Company, and one, a paper of two sheets [p. 266] signed by Mr. A. K. Epstein and myself, as having taken samples from the specific bags which were sent to us in sealed form. This last paper consisting of two sheets and signed by myself and Mr. Epstein, is in the form of a sworn affidavit, subscribed and sworn to July 27, 1921. Well, we made it up; there is no legal effect to it. I wrote it out myself, whether it is legal I don't know. This sworn affidavit describes the samples which I and Mr. Epstein took and which have been offered in evidence, that is, some of the samples. Except I noticed when I read that through now those jars look to me to be bigger to me than a quart. It says in there a quart. I did swear in these affidavits they were in quart jars, but I see they look larger now. I say they look now to be

bigger, more than a quart, because I have quart jars in my bag.

Redirect examination by Mr. Macauley:

[p. 267] In describing this test for protein I did refer to adding alkali to digest. I will have to consult my laboratory record and my manual in order to correctly answer that. I am a little hazy at the close of the day.

Albert K. Epstein, being first duly sworn by the Master, testified as follows (Sept. 27, 1921):

Direct examination by Mr. Macauley:

I reside at 1743 East 71st Place, Chicago, Ill. I have been research and consulting chemist since 1912 after graduation from the University. I graduated in chemistry [p. 268] from the University of Chicago, in 1921, with one year of advanced standing in post-graduate work in chemistry. [fol. 466] I took the post-graduate studies and also did research in physical chemistry, organic and biological chemistry. I studied the chemistry of plant and animal tissues in the same year of 1912 and in the years 1916 and 1920 at the same university. I have also had practical experience as an argicultural chemist studying agricultural products from the chemical standpoint for Kankakee County, Kankakee, Illinois. I was research chemist along biological lines with the Columbus Laboratories in Chicago. I was analytical and research chemist with the Illinois State Department of Agriculture. I have done research work with various animal and biological tissues as applied to food problems. I have been consulting chemist, in business for myself, since 1919. At present I am consulting chemist with Wilson and Company, Packers, in the Stockyards in Chicago; consulting chemist in other industries dealing with problems of vegetable origin and colloids, such as Downey Farrel and Company, A. Daigger and Company, Chicago; consulting chemist with reference to biological and chemical problems for the Medical Research Laboratory, Chicago, Illinois. Doing consulting work for William J. Stange and Company, food problems.

My experience in star ' particularly is due to the actual study in the university, in the chemistry of plant tissues, vegetable tissues, the digestion of starch by various enzymes such as saliva found in the mouth and so forth and action of chemicals on digestion of starch. My experience also is due to work which I did on cereal products, flour, for food purposes at the Columbus Laboratories; also during the time when I was chemist for [p. 269] the Illinois State Department of Argiculture, handling cereal products of all types, studying the chemical and bio-chemical properties, and subsequent to that, a research which I made on the question of the swelling properties of starch as used for the industry to make salad dressing for the Wright Salad Dressing Company. Also investigations and consultation of preparing potato dextrine, dextrine from food starch, adhesives as commercially applied, and so forth. I have read the Perkins Patent in suit and the opinion of Judge Sessions in the present cause.

[fol. 467] Proceedings of Wednesday, September 28, 1921

A. N. Grossman recalled.

Direct examination by Mr. Macauley:

In the course of my testimony yesterday I stated that there was a point with reference to the digestion in the Gunning process as to which I would have to refer to my notes. I have with me Bulletin number 107, revised, of the United States Department of Agriculture, Bureau of Chemistry, which I use in my regular work of analysis and in checking back on the process used for the determination of the protein content. My mind was not clear last night as to just what procedure I went through unless I referred [p. 270] specifically to my notes, because being a chemical engineer and not an ordinary chemist, you don't retain in your memory the exact process I employed in analyses and I therefore wish to change the method of determination and state that the method I employed is in this book which I mentioned, on page 7, which is the official Gunning method. It is the potassium sulphate, sulphuric acid method, rather than the method I stated yesterday. The method I stated yesterday is also the protein method in the sense of being

a determination of the nitrogen content but for a different class of materials than which we are interested in today. I did follow the process as set forth in that book in every detail. On cross examination yesterday I was asked whether I had the notes which I had made with reference to certain tests and I stated that I had not. As to the results of those tests upon recollection, I would compare the sample tested after the ninth washing as about the viscosity of the K. T. H. tapioca flour as found on the market. The twelfth washing would be within the range of the "G" grade tapioca flours. The fifteenth washing would come within a range of the Royal grades, Royal and the like. I have started to process the various starches to show the grade, later the viscosity test of each of the bases I have discussed as well as the samples of cassava I have made by the washing process [p. 271]. I have a sample ready to demonstrate to the court. I have here a bottle labeled sodium hydroxide, pure, electrolytic, one pound, giving impurities in small amounts, as given by the J. T. Baker Chemical Company who are the manufacturers of this material. This is the purest form of caustic soda. The lot [fol. 468] number is 31021. This was purchased from A. Daigger and Company, Chicago. It was brought to Grand Rapids in its original seal and this morning the court reporter, who was present, examined the bottle to see it had not been opened, and I then went ahead. I then weighed out fifty grams of the sodium hydroxide of the bottle which I have just mentioned, measured out 210 cubic centimeters of water which water was obtained from the tap on the sixth floor of the Michigan Trust Building and which I understand to be the regular water used in Grand Rapids. I dissolved the sodium hydroxide in the water specified and when thoroughly dissolved and the caustic soda solution cool—I will explain, that during the dissolving of the caustic soda in water, heat is generated and then to overcome for any volume on account of that heat raised, I allowed the solution to cool. I then made it up to 250 cubic centimeters of water, which is a form of measurement. The total solution to be 250 cc. of water. Therefore, the fifty grams of caustic soda made up to the 255 cc. of [p. 272] solution would give the equivalent of five cc. water for each gram of caustic soda, and this I call my stock solution.

I next weighed up five gram samples of the Holland's Kane base, K. T. H., West Michigan's Perkins Base, Stein Hall's Royal, ninth washing cassava, twelfth washing cassava, and 15th, washing cassava. I measured from a 250 cc. cylindrical graduate, 175 cc. of the water which I obtained from the tap on the sixth floor of the Michigan Trust Building which is the water in use regularly in Grand Rapids, and placed this 175 cc. of water in each glass, the glasses being labeled according to the sample of the glue base and cassava used.

The water is first poured into the glass, then the weighed sample from the counter pan on the chemical balance which was used was brushed with a camel hair brush into the water and stirred with a glass rod so there is no absorption by the glass stirrer or the chemical on it.

I then measured 25 cc. of the caustic soda stock solution which I made up, in a graduated pipette marked 25 cc. and which is a glass cut to show the 25 cc. within the pipette. This is sucked up and with the starch solution kept in agitation, the caustic soda is slowly allowed to run in, the same being agitated thoroughly.

I have in this 250 cc. cylindrical graduate, which is divided into graduations of 2 cc. each, 175 cc. of the water which I obtained from the tap on the sixth floor of the [fol. 469] Michigan Trust Building and which is Grand Rapids City water. I will now pour the water into a clean glass.

[p. 273] I have here, carefully weighed, a five gram sample of the Kane glue base which was obtained from the Holland Furniture Company and which I will use merely to demonstrate to the Court the method of putting the starch into solution for this test. I have here the five grams of Kane base which I will pour into the water, and any particles of starch which adhere to the glass will be brushed in with this camel hair brush. The camel hair brush is rubbed against the weight pan to remove any particles of starch which might adhere.

I next take the glass stirring rod and stir the starch solution into a milk for the purpose of suspending the particles or molecular aggregate of starch in the water.

I next took the caustic soda solution which I mentioned as a stock solution, placed the pipette in the stock solution

and sucked up 25 cc. of this solution. I have here 25 cc. of solution in the pipette. I will stir the solution again and slowly add the caustic soda. The starch solution is now in a milk. I continue adding the caustic soda solution and it is noted that there is a point at which the starch thickens and changes from a milk to a paste. I now continue and it has lost its milky appearance being transformed into a translucid mass with some air bubbles due to the aggitation which carries along in this thickness a certain amount of air. I continue running in the caustic soda solution from the pipette and when the last drop is drawn out I apply air pressure from my breath to be absolutely certain that there is no more caustic solution within the pipette. The pipette is now empty and there is no further evidence of caustic soda being present.

For the test which will be performed before the court, we will allow various samples which have been prepared in [p. 274] accordance with this test, to stand for at least two hours to allow for the caustic soda to react with the starch for the purpose of thinning it. I am doing this for the purpose of, that I have here samples of Royal Tapioca flour which are extremely viscous and if these viscous solutions are not allowed to thin out they will not pass through my viscosity tube in a manner which will give a satisfactory test.

The first sample had the caustic soda solution added at 9:01 by my watch; the last sample had the caustic soda solution added at 9:08.

[fol. 470] The temperature of the water as drawn from the tap was measured with a thermometer in the Fahrenheit readings and registered 74 degrees Fahrenheit.

The weighings of the starch were made on a scale manufactured by Voland and Sons of New Rochelle, New York.

After weighing five grams samples as carefully as possible on the balance and being certain that the weighings were accurate I threw a twenty milligram weight on the weighing side to know whether or not the scale would stick and in every case this additional weight moved the balance which signified the scale was in perfect order.

[p. 275] A. K. EPSTEIN, recalled (Sept. 28, 1921.)

Direct examination by Mr. Macauley:

I will briefly describe the development of starch in plant life. It is known to organic chemists that carbohydrates, the name given to all sugar products, are formed in nature by a process called photosynthesis, or the action of light. The carbon dioxide in the air and the water unite in the presence of the green coloring matter of the leaves to form formaldehyde and this formaldehyde condenses or unites further in larger aggregates forming sugar. A portion of this sugar is utilised by the leaves and the plant as a source of energy, another part of this sugar is stored away in the storage organs of the plant. Different species of plants have different characteristics in storing away the sugar. Some plants, like the sugar beet, we will say, stores away the sugar in the form of what we call cane sugar. On the other hand some plants store away the sugar in the form of starch, such as is in the case in the potato or the cassava. The sugar then condenses again and unites into larger aggregates and these larger aggregates unite into starch granules and form insoluble complexes in the form of cellulose. I am quoting regarding the general idea or accepted idea of the starch formation the following authorities in plant chemistry; "Chemistry of Plant Life" by Roscoe W. Thatcher, M. A., Doctor of Chemistry, Dean of the Department of Agriculture and Director of Agricultural Experiment station, University of Minnesota, published 1821, pages 21 to 29, to cover the [p. 276] whole chapter. Another reference I want to quote is Hess and [fol. 471] Hill, Chemistry of Plant Products, pages 154 and 158; also the same book, Thatcher, I want to add pages 59 and 60, and pags 64 and 63. Also a discussion of this subject by E. Franklin Armstrong, Fellow of the City and Guild of London Institute, 1919, a book entitled, the Simple Carbohydrates and Glucosides, pages 137 to 142, inclusive. The formaldehyde and sugar are soluble [p. 277]. As to at what point in the progress from the formaldehyde to the cellulose does the soluble become the insoluble; the simple six carbon sugar condenses into more complex carbohydrates and in the course of time it will change itself to the

insoluble form. Therefore, at anytime during this process in the plant, there will be left the original bricks, as I might call it, or building blocks, from which the starch is made and also some of the other intermediary starches into which the original bricks went in to building up the blocks, or structures of starch. It is the steps or simple bricks from which the blocks or starches are built up. In a plant containing starch, there will be the insoluble final starch and also at the same time the intermediary products which are building along to form the insoluble starch. I have been asked to make certain investigations into the degrees of degeneration of certain starches. I was asked to investigate whether the starch used by Kane Manufacturing Company has been degenerated or not. I have received samples, or rather taken samples in the presence of Mr. A. N. Grossman at the plant of the Kane Manufacturing Company and these are the samples which I have received in his presence.

(Witness indicates Defendant's Exhibits 8, 9, 10, Sept. 27, 1921.)

[p. 278] Also a portion of the root, a small portion of the root. And I have proceeded to make certain investigations to find out whether the starch in question has been degenerated or not.

Now, what is degeneration? In view of the explanation which I have given before, starch is a complex, or a large molecular aggregate of a number of simple molecules. If this starch complex is broken down into its original building blocks, this constitutes the process of degeneration. It may be broken down completely into its original building blocks—I am using this term figuratively—which would be the case in breaking starch down to glucose, or it can be partially broken down, not to its final point, but to some intermediary step such as dextrine. It may be caused to undergo a change. This process of degeneration may be ac- [fol. 472] complished in various ways, either by the action of a chemical like acid, or alkali, and in the case of acid it is broken down completely and entirely provided you give it sufficient time to break it down to its original sugar from which it is built up. In that case it is no longer starch. It may, however, be partially broken down. If you allow the

acid to act a short length of time, then you break down or degenerate [p. 279] only a small portion of the starch to a certain degree, not completely.

If I may illustrate this thing accurately. This is the large starch molecule (illustrating on pencil sketch) made up from many complexes and by the action of acid you may break it down to—(indicating on sketch), and then finally to the original one. It depends on how long you allow the acid to act upon it, and also upon the temperature of the reaction. At any given case you may vary the conditions to suit you- own desire to have any proportion of intermediary compounds as well as the final product.

In other words, you restore the complex structure that you call starch into its previous elements more or less; into previous portions, simple portions of which it was built up; the substance of which the complex structure is formed. You don't necessarily resolve it into its primary element, but more or less at some point you desire to stop at in the resolution. In other words, the process of building up starch is a progressive process from the simple to the more complex. The process of degeneration is a reverse process which may be arrested at any particular [p. 280] point. The complex structure is in nature. Now this is action with acid, I may also get the same result by alkali. An acid is a substance which has an active component of hydrogen, it usually has a sour taste. An alkali is a substance which has an active component of hydroxyl or O. H. You can accomplish the same result by the action of alkali. If you allow an alkali to act a certain length of time you will get certain complexes broken up. I will state that you will not get the same complexes as you get with acid. It will be different molecular aggregates because alkali will not break down the starch entirely to the sugar form. If you take we will say a certain starch and you make a solution thereof or a paste by boiling it up with water or heating it with water you will get a jelly mass, usually a sticky, heavy mass. That is due to the fact that the starch granules after absorbing water swell up and become thick and viscous. If you take the same starch and [fol. 473] you partially degenerate it, then the products produced by this degeneration has not any more the same

property of absorbing [p. 281] water and swelling. Therefore, the resultant product will not be as sticky or as heavy. It will have a lower viscosity and flow much better. I mean by sticky, heavy, flows heavy, sluggish, lazy. As I say, if you partially degenerate this starch and you boil up the starch with water, subsequently you get a mass that has less water absorptive capacities. And therefore this mass will have a lower viscosity.

Now, if you want to produce a mass of a certain viscosity, you can control the degree of degeneration by either allowing your chemicals to have a longer action or a shorter action upon the substance, or you can control the temperature. In other words, it is within the means of the operator to control final viscosity if he so desires, by the action of alkali and acid. The same result of partially breaking up or degenerating the starches, or partially degenerating the starches with the object of reducing the swelling or water absorptive capacity, can be produced by the action of bacteria, e. g. fermentation. [p. 283] I will say that if you take a starch, cook it up to a paste and add a portion of saliva, while the starch will be thick, in a few minutes, two or three minutes, the starch will thin out.

Now I made certain tests to find out whether the starches in question underwent a process of degeneration and I made the following test; I determined what I call the hydrogenion concentration; in other words; it is a reaction, to find out whether the starches in question are alkaline or acid. The object of this test was, that if the starch in question would have received an alkali treatment it would retain, by the nature of the starch being what we called colloid, a portion of the alkali, a small portion thereof, then, it would have been alkaline in reaction.

On the other hand, if the starch in question would have received an acid treatment, it would be acid in reaction, although no matter how many washings you make you cannot wash out the acid because some portion of it will always stick, and be absorbed by the colloid.

If the starch would have undergone a fermentation, enough of the fermenting end products would have been accumulated and combined with the starch, because starch has an affinity for acids which are difficult to wash out and would give the acid reaction.

[fol. 474] The test which I have applied is one of the most sensitive tests known by which you can tell reaction of a tissue.

By the hydrogen-ion concentration, I mean concentration [p. 283] or the amount of hydrogen carrying a charge of electricity present in one thousand cubic centimeters of solution. It is this hydrogen-ion, that hydrogen carrying the charge of electricity which makes the solution acid; it is the amount of hydrogen-ion which determines the degree of acidity.

The group of hydroxyl-ion, O. H., carries a charge also and it is the amount of the hydroxyl-ion in the solution which determines the alkalinity of the solution. If the solution has an equal amount of hydrogen-ion and an equal amount of hydroxyl-ion it is neutral. If it has an excess of hydrogen-ion it is acid; if it has an excess of the hydroxyl-ion it is alkaline.

It is known that living tissues are very sensitive to the change of a small amount of this hydrogen-ion or hydroxyl-ion. The accumulation of one in an excess amount would mean the death of the tissue.

The way we represent these things chemically is in form as follows: pure water is 10-7, or it is one over ten million. Water contains 10-7. It is one ten-millionth of a gram in a litre. Water contains an equal amount of hydrogen-ion and an equal amount of O. H. ion and therefore water is neutral. Chemically, the amount of hydrogen-ion is ten raised to the minus seventh power, one in ten millions. The amount of the hydroxyl-ion is the same quantity. [p. 284] Therefore, if they are contained in equal amounts in water that is why pure water is neutral. If you have water, or a water solution and a substance is added which will increase the hydrogen-ion and make it ten to the minus sixth power, then the water will be acid. In other words, the slightest variance will go to the element that is in the majority; will be acid if there will be less hydroxyl-ion. Ten to the minus eight, which is one in one hundred million, the water will be alkaline. We express the concentration of hydrogen-ions in whole numbers. This is illustrative but I am going to bring out what I found in the samples. We express this hydrogen-ion concentration in whole numbers; thus we say: Capital P. small h, which is a symbol,

equals 7, means neutral point. P h means a symbol expressing the concentration of hydrogen-ion. P h-8 would be alkaline and P h-9 still more alkaline; P h-6 would mean acid, and P h-5 still more acid and P h-4 still more acid. [fol. 475] As a result of my investigation, I found that the root itself is alkaline; the cassava root itself or tissue. All plant tissues are slightly alkaline and cassava tissue is slightly alkaline, having the P h-7.6.

I prepared starch from this root following in substance the method as outlined in various books for manufacturing cassava starch, which is in substance the same method given yesterday by the two witnesses, Mr. Wilson and Mr. Seligman, [p. 285] and I found out that by continuous washing of the starches I can remove some of the alkali and I found that the starch which I prepared contained—the root was 7.6 and the other starch which I prepared was 7.2, and then another one was 6.9. Starting out with an alkali starch I washed so much out of its natural alkalinity and by so much washing I could remove or obtain a starch which is slightly acid. As to whether such results are mathematically accurate or is there a personal equation or a minus possibility;—I will give you standard works on the subject, there is no plus or minus.

In the starch in question I found out that the Kane Product contains a P h of 6.8, slightly acid; the Perkins product 7.9 and the Royal product 6.6. Seven is the neutral point.

Now then, if the Kane Starch in question would have undergone an alkali treatment of the type of the Perkins Product it would retain its alkali and show in the determination an alkali reaction as the Perkins product does show. If, on the other hand, it would have undergone an acid treatment it would have been difficult to wash out all the acid, and the acidity would have been still higher. If this product would have undergone fermentation, or a partial degeneration by fermentation, this ferm-ative substance of an acid nature would give this product a much higher acidity. [p. 286] As a matter of fact I found that the product of Kane is not far from the neutral point while the product of Royal, which is a non-degenerated starch, which is known to have a high viscosity and the highest grade starch on the market, is a little bit more acid than the Kane. Why? Because this starch has received more washings and more refining.

From this test I conclude that in view of the fact that the Kane Product in question has not as much alkaline reaction as the Perkins Product, it shows that it did not undergo an alkali treatment. In view of the fact that the Kane Product in question has not a high acid reaction it shows that it did not undergo an acid degeneration. In [fol. 476] view of the fact that this acidity is just slightly below the neutral point it did not undergo a process of fermentation which would give it a very much higher acidity.

On the other hand, in view of the fact that experimental results prove that we can reduce the alkalinity by washing, making the substance more and more acid, that we can obtain a starch like the Royal which is a very high grade and which is not degenerated, but if I do not wash or remove the soluble portions I will obtain a starch like the Kane. Therefore the Kane starch shows a reaction which can be explained that it has not been degenerated by either acid, alkali or fermentation processes.

I just want to make one point more.

It is known that enzymes such as saliva from the mouth and the enzymes produced from malt will liquify starch, or break down starch to a point where it loses certain big molecules.

Now the big molecule of starch, turns blue when you put a little iodine on it. If you have a handkerchief which [p. 287] has been in the laundry and starch, if you put a little iodine on it, it turns blue. If this starch has been degenerated to a point where it does not give any more blue color with iodine, this point is called the achromic point.

Now enzymes have the nature of acting within certain limits of the hydrogen-ion concentration. For instance, enzymes of saliva acts just within a definite hydrogen-ion concentration and it has a maximum. If you slightly increase the hydrogen-ion concentration to make it either more acid or more alkaline, the action of this enzymes is retarded.

Now then, if I take starches of certain definite hydrogen-ion and if I boil up this starch solution, make a paste, and if I add a small amount of saliva or diastase, I will expect that some starches will come to the colorless point in a much shorter period than others, because they contain a different amount of acidity or alkalinity.

As a matter of experimental facts, or experiments performed on these starches, when I have taken starches and

make a one per cent solution, boiled up definite quantities of these starches, used the same quantity of saliva, I found that the Perkins base took a longer time to digest because of the fact that it retained the alkalinity. The next one was the Kane and then Royal as the Royal is slightly more acid. However, the Kane and Royal ran not far apart from each other.

I therefore conclude from these experiments that there is a difference in the hydrogen-ion concentration of the [fol. 477] various starches I examined. If the Kane product in question would have undergone a degeneration by alkali or a partial degeneration by alkali it would have retained its alkalinity and retarded the enzyme action the same way as Perkins product did, which is a fact, because it actually does contain a large amount of Hydroxly-ions.

If the Kane starch in question would have received a degeneration process by means of an acid treatment then it would also retard, because at that time the acidity would stick or would be absorbed to such an amount so as to retard the action. The same thing would be true if the Kane product would then retain acids produced by fermentation, and it is a known fact that starches absorb acids which are very difficult to wash out and in that case it would react differently.

A. N. Grossman recalled to the stand (Sept. 28, 1921).

Direct examination by Mr. Macauley:

(Witness resumes his viscosity tests describing them as he proceeds.)

I have here a glass tube made to my specifications which I call my viscosity tube. This tube has been in use by myself in the Kane Manufacturing Company in the testing of all starches and I have brought it along for these tests. It is a glass tube with a cut at the upper and lower levels and the solution contained between the two marks is 100 cubic centimeters at twenty degrees Centigrade. The time of flow between the two marks in question through the orifice will be a number of seconds and will also be called its viscosity number. The stop-watch which I will use is called

the Racer, non-magnetic and came from Switzerland as shown by the movement. [p. 289] The first sample which I will test out will be the Holland Furniture sample which is a Kane base. The water which I will use after each experiment to wash out the tube is regular city water obtained on the sixth floor of the Michigan Trust Building.

I have now poured a tube full of water into the viscosity tube and will now let it flow out, the purpose being to wash out anything which might be in the tube. I take the time in seconds that it takes for the level to flow from the upper mark to the lower mark and that is the viscosity number. I will now stir slightly, the Holland Furniture sample of [fol. 478] Kane Glue. As described earlier in the day, this is the solution made up with 175 cc. of Grand Rapids City water, five grams of the base from each firm and 25cc. of the stock solution of caustic soda which was prepared by a method which I have previously explained. If you consider caustic soda as dry the total water in here is 200 cc.—the starch is five grams. One cc. of water weighs practically a gram. So that I have practically 200 grams to five grams of starch, if you don't take into consideration the caustic soda. That is practically [p. 290] negligible insofar as weight of water goes. The purpose of making this dilution is to get with more ease the rate of flow. If I used a much more viscous solution, I would necessarily have to increase the orifice of this tube or design other means of measuring viscosity. This tube having proven satisfactory, I have been using it. As to how the viscosity of this stuff compares with the viscosity of the actual glue;—the concentration of our glue would be about two and one-fourth parts of water to one part of starch base. So it is a considerable thicker compound than this, and even by the Perkins method of testing their glue it would take approximately 225,000 seconds.

I now hold my left forefinger on the tip of the glass tube and pour in the Kane glue base which was furnished by the Holland Furniture Company. I will now release my finger sufficiently to allow the starch solution to flow until it reaches the upper mark of the tube. I will now hold the stop watch in my right hand and at the very instant I release my finger from the bottom of the tube will press the stop watch, thus. The starch solution is now flowing

through the orifice. It is not acting at uniform speed because as the solution runs down, the pressure head is decreased. The starch solution is now nearing the lower mark in the viscosity tube. At the instant the upper level of the starch solution reaches the mark at the lower [p. 291] end of the tube, I will press the stop-watch which will record the number of seconds it has taken for the solution to flow. The reading is one minute and forty seconds. The actual figure therefore is 100 seconds which will be the viscosity of the starch. This is Holland Furniture Company base. The figures given by these tests are comparative and as the time allowance for the caustic soda to act on each sample increases, the viscosity will decrease, the action of the alkali being to reduce the viscosity. The fact that the rate of progress of the liquid through the tube varied, being slower and slower, might be modified by a different formed [fol. 479] tube, so it must be necessarily comparative; in other words, it is not an absolute result, this 100. It is just a comparative figure in all of these. The comparative feature would be true, that is, it would vary in the same proportion, using the same tube with each of the objects to be compared. I will now stir the sample marked K. T. H. I have stirred the K. T. H. sample. I will now hold my left forefinger on the tip of the viscosity tube and pour the K. T. H. solution into the viscosity tube. I will release my forefinger sufficiently to allow the starch solution to come to the upper mark in the viscosity tube. The starch solution is now on the upper mark in the viscosity tube. I will release my finger and set [p. 292] the stop watch in motion at the same instant. The starch solution is now reaching the lower level. I will record the time as it reaches the lower mark. The reading is forty-nine and three-fifths seconds. The sample of K. T. H. therefore has a viscosity of forty-nine and three-fifths. I will again wash the viscosity tube. As to whether that K. T. H. was treated in any way, from the information I received in New York City where I received this sample from Mr. Hall of the Stein Hall people, we discussed all starches, and I was informed by him and as such would say that there has been no chemical treatment or any other degenerative treatment of the sample discussed. That is so far as I know as given me by Mr. Hall. You might also say on the record that Mr. Hall has

been in Java. I did not see him there. I didn't see Wilson or Seligman either. He is of high repute in New York. I have now poured a sample of West Michigan Perkins Glue base in the viscosity tube and will release my finger sufficiently to allow the liquid to run to the upper level of the viscosity tube. The liquid is now at the upper level of the viscosity tube and I will release my finger at the same instant starting the stop watch. Ready. The solution is now [p. 293] near the lower level mark in the tube. I will record the number of seconds on the stop watch as it reaches this lower level. It is now set. It reads sixty seconds and three-fifths. The viscosity therefore of the Perkins glue base is sixty and three-fifths. I will now wash the viscosity tube to free it from any hanging matter.

I will now stir the sample marked ninth washing which is the sample which I made in the laboratory from the cassava root by washing as described in my testimony on yesterday. I will now hold my finger at the tip of the tube and pour in the sample marked ninth washing. I will release my finger sufficiently to bring the solution [fol. 480] to the upper level at the mark in the tube. I will release my finger from the tube, at the same instant starting the stop-watch. The starch solution in the tube is now reaching the lower level and when it reaches the mark cut in the glass, I will also record the stop watch reading.

Set. The reading is fifty-five and two-fifths seconds. Therefore the viscosity of the ninth washing from the cassava root which sample was made by me, is fifty-five and two-fifths seconds.

I will now stir the sample marked twelve washings, which sample was made by me and testified to yesterday, that this sample was made from cassava root and washed in the laboratory twelve times.

I want it put on the record that in the stirring of these solutions I am using glass rods of which there are five here, that each rod was perfectly clean and dry before being put into the sample which is to be tested for viscosity, and when I find it necessary to use fresh glass stirrers, they will be washed in fresh water and wiped thoroughly dry.

[p. 294] I now hold my finger at the lower tip of the viscosity tube and pour into it, the solution from the twelve

washings made in accordance with specifications described this morning before the master. I now release my finger until the solution reaches the upper mark in the viscosity tube. The starch solution is now at the upper level of the viscosity tube and I will release my finger from the tip of the tube, at the same time putting the stop watch in motion to record the number of seconds for the flow. Ready.

The starch solution is now nearing the lower mark in the viscosity tube and at the instant it reaches that mark I will record the number of seconds by stop watch.

You will note that when I take the upper reading I rise to put my eye on the same level with the mark and when I am seated I take the lower reading when my eye is also in direct line with the mark. Set.

This reading is sixty seconds and forty-eight and one-fifth which reads therefore one hundred eight and one-fifth seconds. The viscosity of the twelfth washing therefore, is one hundred eight and one-fifth seconds.

I will now wash the tube before proceeding with the next sample. Where I have not stated that I washed the tube, it is understood that it has been done each time.

I will now stir the sample marked fifteenth washing and which is a sample prepared by me in the laboratory and [fol. 481] testified to on yesterday; that it has been washed in my laboratory fifteen times and produced the base which has been offered in this case.

I now stir the sample of the fifteenth washing. I now hold my left forefinger at the top of the glass tube and pour the solution from the fifteenth washing prepared by me this morning into the tube. I will release my [p. 295] finger sufficiently to bring the upper level of the starch solution to the mark in the viscosity tube. I will release my finger and put the stop watch in motion simultaneously. Set.

The solution is now near the lower mark in the viscosity tube and at the instant it reaches the lower mark I set the watch to record the number of seconds for the flow. It has now reached the lower mark and I have recorded the viscosity as two minutes eighteen and one-fifth seconds. The viscosity is therefore 138½.

I will again wash the tube and remove any material which might be hanging on the side of the tube.

I will now stir the sample marked Stein Hall Royal which sample I testified I received from the Stein Hall people in Chicago. Holding my finger at the lower tip of the viscosity tube, I will pour into the tube the Stein Hall Royal solution. I will release the finger sufficiently to lower the level to the upper mark in the tube. I will release my finger at the same instant that I set the watch in motion.

The starch solution is now reaching the lower level of the viscosity tube and at the instant it reaches the lower level at the mark I will record the stop watch reading. I now record a reading which is two minutes forty-six and one-fifth seconds. It is therefore 166 1/5 as a viscosity for Royal. This concludes the readings. [p. 296] The K. T. H. sample which I tested here was tendered me in person by Mr. Frank Hall one of the executives of the Stein Hall Company of New York City. I asked him for K. T. H. He procured it for me while I waited for him in his office. He said "Here is a sample of K. T. H. I refer to the mark on the same, the capital letters K. T. H.

(Bag of starch referred to received in evidence and marked Deft's Ex. 1 Sept. 28, 1921.)

As to how I account for the relative viscosities of the Perkins, Kane and Royal starches as shown by my tests; the Kane shows a viscosity of one hundred: the Royal shows a viscosity of 166 1/5; the Perkins shows a viscosity of only [fol. 482] 60 3/5. The Kane and Royal differ only in the amount of impurities such as soluble matter and any other substances which have been removed in the washing process of the manufacture of the starch. It also is due to the fact that there have been removed from the Royal as compared to the Kane portions of intermediate stages of the starch development [p. 297] which are still present in the Kane Base and which are not present in the Royal owing to the highly refined state it is in. That highly refined state is due to the washing process which removes impurities which I have mentioned by various methods. The difference between the Kane and Royal as compared to the Perkins is due to the fact that neither Kane or Royal are in so degenerated a state as shown by the Perkins patent. What I mean by saying "degenerated" is the fact that they are not degenerated at all, they are not the results of any

chemical treatment whatsoever, and we have found out and we know that the Perkins sample which we have is a so degenerated base by virtue of its chemical treatment. As to the samples I put in yesterday I called them nine, twelve, and fifteen washings, which is nothing more than putting the material into a silk bag and letting the water run onto it and the milky fluid which will run off will be starch and water and the material left in the bag will be crude fibre and other impurities. The liquor drawn off after the starch has settled will carry off the soluble matter from the starch which soluble matter might be various things among them intermediate stages of the starch development, and this of course will by successive [p. 298] washings remove more and more of it as I get from the analyses made. As to whether the Royal has actually been submitted to 15 different washings: I didn't say that. I said yesterday in my testimony that the methods which I employed were crude laboratory methods as compared to a factory, crude in this way; that I have not the mechanical apparatus for the continuous stirring and addition of water as they would have in a factory where they have a constant stream playing on the starch all the time. Therefore, the number of washings it did take me to make my starch would therefore vary. From my experiments it is my opinion that washing of the starch improves the viscosity and increases it. If a starch is washed in a plant twice, it will not have the same viscosity as starch which has been washed three times, because in the third washing you have removed, as I said before, a certain additional amount of soluble matter certain [fol. 483] matter which comes from the intermediate stages of the starch development and other soluble matter like fine fibre. As to my opinion as to the reason that the experimental starches which have been given respectively nine, twelve and fifteen washings differ in viscosity; I conclude that the impurities and the fibre and the like, also the small amount of soluble matter and other substances as I stated as the intermediate stages of the starch development are the cause of the low water absorptive property of the starches and that by the removal of these impurities [p. 229] and other substances you increase the quality of your carbohydrate base and when you increase the carbohydrate base, you have a higher viscosity starch. As

to the difference in treatment which the starches of varying viscosities on the market have received; I conclude from the samples which have been tendered me from time to time as we are ready to purchase raw materials, that where I have viscosities which run lower than others and which viscosities I gather from a test identical with the test made here this morning for the viscosity of the starch, that where I have a starch which gives a low viscosity, it proves to me that it is a starch of low water absorptive capacity, and where it has a low water absorptive capacity then I conclude that it has not gone through as many washings as it would as if it was of higher water absorptive properties. And further, that the foreign matter which if removed from the lower grades of washing processes, had been removed, we would have had higher quality, higher absorptive water capacity starches and therefore higher viscosity starches. As to the measurements and specifications of the tubes I used for these viscosity tests; the measurements which I made on this viscosity tube were to include a volume between two marks which would hold one hundred cubic centimeters of water at twenty degrees Centigrade. In the tube on which the experiments were performed this morning, the average mean diameter of the inside of the tube between the sections where the one hundred cc. were measured was 2.45 centimeters. The length of the tube between those two points was twenty-two centimeters. The diameter at the tip [p. 300] of orifice was two-tenths of a centimeter. The tube was cylindrical, as near as it is possible to get it. Between the lower mark on the tube and the orifice the shape is drawn down almost to a point and is therefore conical, the rest of the tube being cylindrical with a lip about seven and one-half centimeters from the top. I am speaking about the lip, the flange part of the upper end. [fol. 484] That is about 7½ centimeters above the upper mark. We are simply interested in the head from the upper mark down.

Cross-examination by Mr. Crosby:

As to whether I have been making viscosity tests on the Kane Company's base right along; I am the only man who makes those tests in the factory. The Kane Company

glue base does run uniform as to viscosity. I testified that before Judge Sessions that our base depended upon absolutely uniform product, and because we do not treat our material whatsoever and depend upon our ability to produce a material which must run uniform. We do not have any complaints from any of our customers and we therefore know as checked up in the laboratory that we have a uniform product. I was at the plant of the Holland Furniture Company last winter, [p. 301] at the time Doctor Grosvenor took samples. I remember his testifying in this case that he took a sample of the regular Kane Company's glue base they were using there. It is my understanding that all the Kane Company's glue base which they shipped to the Holland Furniture Company was of practically the same uniformity and the same as the sample Doctor Grosvenor took. That is substantially the same as the viscosity. Regarding this viscosity test which I have several times carried out here with this tube I have just described, and as to what viscosity water has on that tube; (running 100 cc. of water through to see what the viscosity was in seconds) depending on the temperature of the water it will run between twenty-six and thirty. Twenty-six at about eighty degrees Fahrenheit. Roughly it would take twenty-six seconds for 100 cc. of water to run through that tube at eighty degrees Fahrenheit. I am not giving the exact temperature because I haven't them before me. The other figure would be up to thirty, between twenty-six and thirty seconds. At thirty seconds I should say the temperature would be—I should say tap water in season around fifty-five [p. 302] degrees Fahrenheit. I have tested thousands of samples of cassava starch on that instrument. As to how high readings I have got with cassava starches on that: —it would depend—I can not answer that without qualifying. As to how many seconds reading have I got with cassava starches on that, how high readings, I would say 200 seconds or over. Nothing over 220. That is the highest reading I ever got for cassava starch on that instrument. I testified as to the viscosites I obtained on various of these [fol. 485] samples in evidence which viscosities I obtained by tests made in Chicago; I gave those from memory. I gave no figures. They were within ranges of certain grades. As to whether [p. 303] I think my memory on that is about as good as my memory as to the tests I performed for

proteins, I would say, more vivid because of the more striking results obtained. In the analysis for protein it is a cut and dried method, while in the method for viscosity which includes everything I got by washing, I was amazed that the ninth washing gave me a viscosity within the range of the K. T. H. grade, the twelfth washing was within the range of the "G" grade and the fifteenth washing very much in line with the Royal grade.

Examination by Mr. Macauley:

Regarding the highest viscosity reading which I had made on cassava and the qualification I had in mind,—I have given testimony and stated that these results are comparative and depend upon the length of time which the alkali as caustic soda is allowed to react upon the starch in solution for viscosity test. Therefore, if the viscosity test is run in one-half hour, you get a certain set of figures. If you run them in one hour the figures will be reduced. If you run in two hours, they will be further reduced. If you run them in four hours, they will be still further reduced.

Now, then, often times we get samples in from people, brokers in Chicago, who tell us, "Now we have this bid open," say till four o'clock, "and must wire back." If the sample comes around noon and I am busy I will probably take the viscosity test within the first half hour, because by comparison, I can obtain by these tests, the judgment I need to purchase that raw material. Therefore, the viscosity test on some starches might be high but will be higher for certain [p. 304] grades if treated for the shorter periods of time.

Oft times I am called upon to test starches for other people, our cassava and other starches which are of heavy bases and necessarily I will get viscosity readings which are much above what we need for Kane base.

[fol. 486] A. K. Epstein recalled (Sept. 28, 1921)

Direct examination by Mr. Macauley:

(Witness continues his last testimony.)

In making this test which I described before I want to introduce these two books as my References for the tech-

nique I used and the conclusion which I have drawn therefrom. It is the Determination of Hydrogen-ion by W. Mansfield Clark, M. A., P. h. D., Chemist Research Laboratory of the Dairy Division of the United States Department of Agriculture, published in Baltimore by Williams and Wilkins Company, 1920, Chapter Five Practical Physiological Chemistry, Sidney W. Cole, Trinity College, Cambridge University Lecturer, England. Medical Chemistry Cambridge, published in 1919, 5th Edition, pages [p. 305] fourteen up to page 31. I have made other tests. I made tests to find out the relative amount of sediment formed by putting the starches in question, namely; Royal, Kane and Perkins, in paste form. I took one gram of starch and put it into a glass beaker which is a certain kind of a glass used in chemical laboratories and added to it cold water 10 cc. and stirred it up till I got a milky suspension, then added to it hot boiling water, about 92 cubic centimeters, with constant stirring; put it on the flame—burner and heated it about one minute—it took about thirty to forty seconds to reach the boiling point—and then boiled it for one minute—it took about thirty to forty seconds to reach the boiling point—and then boiled it for one minute and it formed a translucent paste, opalescent. When I say "paste" I mean a solution somewhat similar to those we saw this morning; a very thin solution which is opalescent and translucent. [p. 306] This paste which I made with boiling water; it is a dispersion of starch in colloidal form, uniform throughout. Then I cooled this solution and made it up to a volume of 100 cubic centimeters at room temperature. I then took fifteen cubic centimeters of this one per cent starch paste, as I call it, and introduced it into a conical tube which is graduated to one-tenth of a cubic centimeter at the bottom, and placed it in a centrifuge. The object of a centrifuge is to throw down particles and form a sediment. If something is in suspension, if a number of particles are in suspension, and you allow it to settle, the heavy particles will settle down, but you can get the same process hastened if you centrifuge it, whirl it; this throws the particles down much quicker. The heavy particles of the liquid are thrown down by centrifugal force. The separation is the same as [fol. 487] in the cream separator, the milk goes to the outside and the cream to the inside, the milk being heavier

than the cream and of course any solids in the milk [p. 307] separator are still further thrown out in the milk. And I have found as a result of the experiments after I have whirled it in the machine for about ten minutes at about two thousand revolutions per minute—going around very fast—that a certain cloudiness was observed on the bottom of these tubes; the upper portion was clear, the lower portion was very cloudy so you couldn't see through. I read off the amount of cloudy material present there. It was in a very sharp line of separation. A distinct line of demarcation. I read off this volume and found very striking results. All of the three samples Perkins, Kane and Royal were treated alike, the same amount weighed out, the same temperature used in making the solution, the same tubes used to centrifuge, exactly the same size of centrifuge, same number of minutes in the same machine. The centrifuge to which I have referred is a common laboratory instrument. I found that in the case of the Kane product that cloudy portion was two and four-tenths cubic centimeters, in the Perkins product one and one-tenth practically half, and in the Royal product four and two-tenths cubic centimeters.

Now this cloudy substance is the portion of the starch which is not dissolved in the hot water, it stays there in suspension or emulsion, if I may call it so. The reason the Perkins product contains much less than the others is due to the fact that the product has undergone a process [p. 308] of degeneration which has broken down the complex molecules of the starch and reduced them into more simpler ones, therefore, the sediment or cloudy portion is less.

In the case of the Kane product it is twice as high which shows that under the same conditions it didn't receive a treatment which would degenerate it.

In the case of the Royal it is 4.2 very much higher than the rest of them because the soluble materials and other such substances have been removed from the Royal grade in the process of manufacture by the continuous washing while it was not the case in the Kane product.

As a result of this experiment I conclude, in view of the fact that Kane product has twice—more than twice as much of that cloudy sediment, insoluble sediment, than the Per-

kins product, it may be therefore concluded that the Kane product has not been so degenerated to produce portions—[fol. 488] particles which would be soluble or of lower molecular aggregates.

I have another experiment which I performed which is based on the principle put forward by Zeigmondi, in his standard book, an authority on the chemistry of colloids, number one, by Richard Zeigmondi, Professor at the University of Gottingen, Director of the Institute of Inorganic Chemistry and translated by Elwood B. Spear, published by Wiley and Sons, New York, Incorporated; London, Chapman and Hall Limited.

This test is called gold number. I will explain the principle of this test and what it actually would show, what it means and then I will state what results I have actually found.

You see, I try to find out from various angles, from physical conditions, centrifuging by throwing down the [p. 309] heavier particles, biological tests, enzyme action and colloidal test to find out if they correlate each other in order to find out the various properties of the substances, and therefore use various physical, chemical and bio-chemical experiments.

A colloid is a substance which will exist in the form of a dispersion uniformly in a liquid medium. When the dispersion becomes great enough, it is a suspension and settles out. When the particles become great enough it forms a suspension, settles out; when it becomes very very small it forms a solution and is dissolved. A colloid in solution is just between an actual solution and a suspension. Familiar examples of a colloid are for *for* instance, gelatin, which you are all acquainted with, used in making jello pudding. That is a colloid. Starch in solution, when starch is boiled in water, it is a colloid, it isn't crystaline, it is colloidal. All the protoplasm of our tissues are in a colloidal state. Animal glue is a colloid. As to whether there is no definite demarcation between a colloid and a phase above or below it; that is to say, the run is arbitrary; there are certain technical demarcations which do not bear on this question and I don't want to go into it just now, I just want to give you the general idea. I don't want to measure the particles, use the ultra-microscope and so forth because it has no bearing at all.

I can take a gold chloride and make it up in a solution. [p. 310] Gold chloride has a slightly yellowish color, the color of gold, but if by some means or other I may put gold chloride in a colloidal dispersion I will increase the particles and the solution will obtain a red color, because this is due to the fact the light passing through the solution [fol. 489] absorbs certain rays and the amount of absorption of light is due to the particles which gives you the red color. When I say "increase the particles" I mean increase the size. That gives us a different color. If I take and add to this colloidal gold, salt, table salt, I immediately disturb that dispersion and the gold will be precipitated out, due to the electrical charge which the salt puts on the colloidal gold particles in dispersion and throws them out from solution and the colloid will change from the red to the violet, blue, pale blue, until the entire solution becomes colorless and the gold goes to the bottom, a deposit which you can see with the naked eye.

If you add to this colloidal gold solution another colloid—let's say gelatin or starch, and then you add your salt solution, the color will not change, because the colloid that you have added, protects—has a protective action on that dispersion and does not allow the salt solution added to change the color or throw it out from dispersion.

Each particular colloid has different qualities insofar as the amount required to protect. As to whether that is [p. 311] due to the formation of a film around the particles; it has been so suggested as a very ingenious theory; on the other hand some people think it is absorbed on the surface-forming something like a film as you say.

Different colloids as I say have different properties to protect colloidal gold solution. The number of milligrams required to protect ten cubic centimeters of a certain strength of colloidal gold from changing its color by the addition of one cubic centimeter of sodium chloride is called colloidal gold number or it is in other words the number of milligrams required to do this act and varies on different colloids.

The factor governing this protective action is due to the size of the particles. If the particles are larger, a larger amount will be required to do the same protective action than if the particles were smaller in size. Particles of the protective colloid added.

Therefore, if I take a starch and if the particles are of a certain average size, it may require twenty milligams to do this protective action. If I take the same starch and degenerate it, break it down so the same volume contains a larger number of particles but smaller in size then it will require a smaller quantity to do this act. The gold number, therefore, is a measure of the average relative size of the particles in question.

[fol. 490] I found in the experiments which I performed that the Kane product had a gold number of eleven milligrams, Perkins product five, and Royal product eighteen.

Now, what is the conclusion of these experiments? [p. 312] That insofar as the gold number is the index of the relative size of the particles of solution, Kane product has a gold number twice as much—more than twice as much eleven against five.

The gold number is the number of milligrams of the colloid which requires to protect ten cubic centimeters of gold of a certain concentration to change its color from the red to the blue, if one cubic centimeter of ten per cent salt solution is added. By salt solution I mean sodium chloride.

In other words the gold number is an index of the average size of the particles of the protective colloid.

I conclude from these tests that the Kane product has not been so degenerated as the Perkins product.

The Master: The witness has been stating throughout his experiments as relates to the Kane product. I would like to know whether what he means by the Kane product is the entire amount of starch sold by the Kane Company to these defendants as shown in their statement filed with me?

Mr. Macauley: My impression is that the testimony is to that effect already.

Mr. Crosby: I think it is, your Honor.

[p. 313] Mr. Crosby: As I understand, counsel for defendant contends that this testimony applies equally well to all of the Kane base sold the defendant company.

Mr. Macauley: That is right, isn't it; I don't know.

Mr. A. N. Crossman: Yes, that is as I understand it.

Mr. Crosby: Defendant's counsel does not contend there is any difference, no substantial or material difference so

far as the questions in this case go between any of the Kane products sold to the defendant company?

Mr. Macauley: I think if Your Honor finds one way or the other to any portion it will apply to all; it can't be otherwise.

(Mr. Epstien, continuing:) The Royal product, which is a highly refined starch, which has been manufactured by continuous and repeated washings from which all the [fol. 491] soluble materials present in the original root or the materials of an intermediary stage which did not go into the structure of the starch have been removed, such a product as Royal has a very high gold number, 18 milligrams.

In view of the fact that starch swells up, the particles swell up larger, they absorb more water and therefore it has a high gold number on account of the particles being larger. [p. 315] The Royal grade therefore has a gold number of 18.

I testified that I prepared from the root myself in the laboratory, some starches by the process of washing. I had a crude starch and a refined starch and one starch I treated with alkali of one quarter of a per cent. Finally, after allowing it to stand for eight hours, I shook it at certain intervals, I decanted the alkali, or the solution containing the alkali and then dried the resulting mass and I may add I obtained a good separation of the liquid from the mass by using the centrifuge.

I made tests on these starches with the idea in view to find out whether or not additional washings did improve the quality of the starch and with the object of seeing whether the particles will absorb more water and swell, and as a result of my experiments I found out that the starch which I had degenerated with alkali had a gold number of six; the starch which underwent the washing treatment has a gold number of nine, and another one has a gold number of 19. This substantiates the finding that washings remove some portions of the starch which results in making a higher class starch. It is the presence of these substances in this starch which comes from the original root which have not been removed by the original washings which gives the Kane product its properties.

I have made a viscosity test but in a different form [p. 316] than presented by Mr. Grossman. In my testimony just given I referred to starches which had undergone treatment. That is the starch which I have prepared in the laboratory treated with alkali. When I speak about these starches, crude and refined, I mean those which are actually made from the root. I said so in my former testimony. This treatment which I have defined before, I made those starches by washing, by using water in the laboratory, only water, using substantially the same process as described by Seligman and Wilson or described in the literature on the subject which is substantially the same thing. I used sterile water for those tests; washings, ordinary tap water. Distilled water is sterile water pro- [fol. 492] vided it is kept in the condition where it is not subsequently contaminated. You may have sterile water but if it is placed where it is contaminated it is not sterile.

Viscosity tests were made on a one per cent solution of starches made up in the same manner as I have made up the starch solution for the gold number test.

In the various tests which I have made I found that [p. 317] the viscosity of the Kane base is this (indicating). Next would come the Perkins and then the Royal; I illustrate this with a figure. I get a one per cent solution as I made them. Perkins is the lowest; next is Kane; then would come the Royal. Perkins the least viscous, one minute and 42 seconds; Kane 2' 22"; Royal 2' 44". Those were with a different apparatus than Mr. Grossman testified to and a different solution. A duplicate experiment shows; one minute and 42 seconds for the Perkins products; two minutes and 13 seconds for the Kane Products, and two minutes and 45 seconds for the Royal. By duplicate I mean you repeated with the same apparatus, the same experiment. Now the apparatus used in this experiment is here, (indicating). The temperature of the experiment was 25 degrees Centigrade. I introduced my starch solution right in here (indicating) and syphoned it up with a piece of rubber in here (indicating) until it is some place here (indicating). I used the Oswald viscometer. That is a standard instrument for that purpose, for making viscosity tests. Viscosity tests of all [p. 318] kinds. That is not the instrument Mr. Grossman used, it is a finer instrument. From

the various viscosity tests I have made, in all these tests, Perkins product had a lower viscosity. Now, the factor that governs the viscosity is the size of the particles, or, in this particular case, o fthe starch, it is the swelling properties of the starch. If the starch swells more, it has larger particles and it will be more viscous. If by some process or effect, the starch has been so degenerated that it contains particles which will not swell or which will not swell so much as otherwise, the viscosity of such a solution will be less. The particles which I refer to as being smaller or larger are not of sufficient size to be visible to the naked eye. I therefore conclude that the Royal product having a greater viscosity than the Kane product is a product which has received more refinement and more washings. The Kane product is the product which has not received so much washing, it has retained the original substance from the root which do not swell very much, hasn't very [fol. 493] large particles, and therefore it is of a little lower viscosity than the Royal product.

On the other hand, the Perkins product which has been degenerated by process contains particles which are very small, which have comparatively a small water absorptive [p. 319] capacity and therefore the viscosity is low. In respect to the sugars and other solubles in the roots; in view of the facts with reference to starch formation that it is built up by condensation of lower substances such as ordinary sugar, as I have stated before, if I will take the root, I would find a small amount of the lowest brick, figuratively speaking, or building chip or block, from which the starch is made, and as a matter of experimental fact I found that the root itself contained a small portion of sugar. I have looked in the literature to find out whether somebody else has found the same thing and I found a reference. And that authority found approximately the same amount of sugar, or the same magnitude.

I then proceeded to analyze the amount of traces of sugar which are in all cases lower than one per cent by weight. In the samples of the starch which I have prepared from the root,—I found that the more I refined my sample by washing the more of this original soluble substance from which the starches are made was removed by the process of washing which simply corroborates the other

evidence that by continuous repeated washing you will remove some soluble as well as other material which are in the intermediary stage of starch formation. And these materials which are present in the Kane product which are not removed by the process of continuous washing are responsible for the properties which the Kane product possesses. By "these properties" I refer to the solubility. In the Perkins sample it is interesting to note I found the amount of sugar very low, fifty-eight thousandth of one per cent. I am making it clear that I have a method whereby small traces of sugar can be determined. It is a method devised by Professor Folin and Wu, a Chinese, published in the Journal of Biological Chemistry, 1920. Also appears in Physiological Chemistry of A. P. Matthews, Third Edition. This method is used to detect traces of sugar in blood and other tissues.

The reason that the Perkins product has such a minute trace of sugar is due to the fact that the product which I have tested received an alkali treatment; it was treated with alkali and it is known to organic chemists that alkali has the property of changing sugar into something else [fol. 494] which doesn't give any more sugar reaction. I will refer for this fact to the researches of the late Professor Neff of the University of Chicago, the theory of which is summarized in the biological book on chemistry by A. P. Matthews.

As to the presence of hydrocyanic acid in the root; it was discovered by Wyndham R. Dunstan, M. A., L. L. D., F. R. S., and T. A. Henry, Doctor of Science, Assistant in the Scientific and Technical Departments of the Imperial Institute, and S. J. Nauld, Ph. D. It is reported to the Royal Society in the proceedings, volume 78, B. 1906, [p. 321] pages 152-158, under the head of Cyanogenesis in plants, number five, The Occurrence of Phseolunatum in Cassava. This article discusses the fact that they have found a poisonous principle in cassava root which contains hydrocyanic acid. This hydrocyanic acid is in combination with glucose or sugar, and is called glucoside. It is also reported in literature the amount of this acid, poison acid present, is to the extent of three hundredths of one per cent. It is known to plant chemists and plant physiologists that the function of the glucoside in the plant is a protection against

bacterial infection because the glucoside is antiseptic, poison, and if bacteria would invade the root, immediately the cell produces an enzyme or agent which liberates that poison from the combination in order to make it active and protect itself against injury.

I will quote on this subject from Monograph on Biochemistry, Simple Carbohydrates and Glucosides, E. Franklin Armstrong, Doctor of Science and Ph. D., Fellow of the City Guild of London City Institute, published in 1919, page 189, under the title, Glucoside and Animal Nutrition, pages 189, 190 and 191.

Chemiistry of plant life, Thatcher. I have referred to this authority on some other subject. Page 91, Physiological uses of glucosides.

I quote from the Chemistry of Plant Products, Hess and Hill, published in 1917. The book is called an introduction to the chemistry of plant products by Paul Hess, Doctor of [p. 322] Science, and Ph. D., Lecturer on Chemistry, and in the Medical School of St. Mary's Hospital, London, former demonstrator of Chemistry and Toxicology in the medical school of St. Thomas, Hospital, London, page 175. I quote: "The antiseptic properties of these disassociation products," meaning glucosides, "may have a value in preventing development of disease organisms in parts which may be damaged, e. g. seeds, leaves and bark." I heard the [fol. 495] testimony of Messrs. Wilson and Seligman yesterday as to the process of producing cassava starch from the roots. It is my opinion that under the conditions which he describes, no fermentation takes place. Briefly my reason for that, is that the only time organisms will attack a starch violently lively, I mean, and rapidly, and degrade it, is when the starch is digested as in the case of cooking. That is after it is digested, when the starch is digested, or when the starch is bruised to the extent it is broken up such as the process of milling or grinding it, but it has been shown by experiments that if you take raw starch—and by this I mean raw starch, not cooked starch or boiled starch—and suspend it in water, it is very resistant to bacterial action and it takes at least from five to seven days before the slightest corrosion is noticed.

Furthermore, in view of the fact that the cassava root which has a glucoside or poisonous ingredient, as shown by

the authorities, the tellological reason is that [p. 323] it serves as nature's protective agent against damage.

Furthermore, the case with this product is different than the case with potatoes. Potato starch when subjected to a low temperature or bitten by frost, as it is called, will actually degenerate and form sugar in the ground, but it is a matter of fact as soon as the temperature gets warmer, the sugar disappears and immediately that sugar forms back again into starch. The climate down there, the lowest temperature at night in Java, is warm and such degeneration as we may have in our present climate is not possible there, another reason why we are not successful in cultivating it on a large commercial scale, on account of the temperature. The presence of glucosides is common to many plants, not all plants, certain types of plants, but the nature of glucosides are different. This particular glucoside is found in cassava root and in certain beans, Burma beans. Also almond contain—bitter almonds contain this principle, this particular glucoside. There are other glucosides of different types; they are not common to all vegetables or plant life.

Cross-examination by Mr. Crosby:

[p. 324] When these starches are given the ordinary washings a portion of the glucosides are washed out. I don't know how much. When I was giving the figures of these various tests I performed showing relative viscosities of the cassava starch bases which I was testing, I referred to certain sheets having notes thereon. In the hydrogen-[fol. 496] ion concentration test which I referred to P h 7 means neutral. Anything over seven means alkaline and anything under seven means acid. My sample of the Kane product by this test tested acid; slightly below the neutral point. And the sample of the alleged Perkins product tested alkali. The sample of the Kane Product gave a P h test of 6.8. The sample of the Ropal gave a P h test of 6.6; the sample of a fine cassava product made by myself in the laboratory, gave a test of 6.9. Whereas a sample of crude material made from the root gave a P h test of 7.2 and a sample of the root itself gave a P h test of 7.6. And the sample of alkali treated root gave a P h test of 8.4. Sample number seven which was [p. 325] a sample

prepared in the laborat ·y by an alkali treatment gave a P h of 8.4.

Proceedings Nov. 9, 1921

[p. 326] (Under stipulation counsel for Plaintiff offers in evidence a copy of the testimony of Shirley D. Taylor and William M. Grosvenor, taken in rebuttal in the accounting proceedings in the case of Perkins Glue Company vs. West Michigan Furniture Company, et al. The said testimony of Shirley D. Taylor and William M. Grosvenor reads as follows:

[p. 327] SHIRLEY D. TAYLOR, a witness in rebuttal, in behalf of the plaintiff, having been previously sworn, testified as follows (Jan. —, 1921):

Direct examination by Mr. Crosby:

I do know something about the Empire Company, in Goldsborough, which has been testified about in the case. I have been in their plant and seen their work several times. As to the glue they use in their plant for gluing [p. 328] up veneers; they use vegetable glue for gluing the panels that they sell to the furniture trade, and they use silicate of soda for making the 3 ply box shook. For vegetable glue they use Perkins Glue. We have been selling them glue continuously since 1911. I think there is also some mention of testimony in this proceeding as to the Breece Manufacturing Company. I have been in their plant and seen their work several times. For gluing up veneers they use vegetable glue. They have used a good many pounds of our Perkins glue. The Empire Company, at Goldsborough, do not use our Perkins Glue on box [fol. 497] shooks. As to how the back panels and drawer bottoms and glass backs are put in or held in cheap furniture, you take case backs and mirror backs or glass backs, they are nailed on. Drawer bottoms are usually inserted into a groove in the sides and front of the drawer. Those means of securing panels in place in furniture aid in holding the veneer layers [p. 329] together. In the case of the case backs and glass backs being nailed on, why the nails, of course, aid in holding the veneer together.

In the case of the drawer bottoms being inserted into a groove, the groove is always just the right width to allow the bottom to be inserted, and they always want it to have a tight fit, so that the thing will not rattle, or anything that way, when the drawer is moved. In cheap furniture what you would call box board, a 3 or 4 ply cardboard glued together is also used for glass backs and case backs. It is not veneered wood, it is paper. I have seen furniture with such cardboard or paper in it on the back of glass. That kind of material is not permitted in good quality of furniture. A man that makes medium grade or a good grade of furniture would not use it. As to what are box shooks, the box shooks that we have been referring to here are shooks made of 3 ply veneer, three [p. 330] pieces of veneer glued together; then they have a batten or cleat nailed all around the edge. They are used for shipping phonographs and most all kinds of fabrics; woolen and muslins. The shook would be only part of the [p. 331] case; either the side or the end; a panel, with those battens or cleats nailed around, and of course there are four sides to it and two ends. They use these box shook panels to make these cases or boxes out of. They also call a box made out of solid wood or lumber, call that a shook too. But of course, all we have been referring to here is the 3 ply shook. These battens I have spoken about as going around the edges help hold the veneer layers together, because they are nailed on to the 3 ply piece. The nails go through the veneer layers. I am familiar with the class of veneering work done by the Grand Rapids Veneer Works, here in Grand Rapids. I am also familiar with the class of veneering work done by the concern of John Widdicomb, where the witness Mr. Veneklasen worked. As to whether the work done by the Grand Rapids Veneer Works is the same class of work as that done by the Widdicomb concern, I would say they both did practically the same class of work. So far as their gluing operations are concerned, the work of both is practically the same. With the same [fol. 498] glue, they should get the same increase in spread with the use of vegetable glue over animal glue. I am also familiar with the gluing operations as practiced by the West Michigan Furniture Company, and by Hood & Wright also. They should get the same result, so far as spread

is concerned, with the same glue. They are both given the same instructions as to its use; they should get practically the same amount of spread. The results are uniformly effective. I have examined the use of silicate of soda in the gluing up of ply wood or veneers. As to how does the joint produced by silicate of soda compare with the joint produced by animal glue or vegetable glue; I would not say that a silicate joint was anywhere near as good as a joint made with animal glue or vegetable glue, because, in the first place, it is not a lasting joint. Silicate does not have the adhesive qualities. It has not the ability to expand and contract with the wood as moisture would affect it, say. The joint is brittle and it does not take very much of a bump on a piece glued with it to, what you might say, crystallize the [p. 334] joint. My experience in connection with the use of silicate of soda is being in factories where it has been used. Not as an employee, but I have examined the work, and it being used in factories where our vegetable glue has been installed. I being there in the interest of my company. On such occasions, I did examine the panels or ply wood glued up with silicate of soda. I have torn some of them apart to see how well it held together. As to what the attitude of furniture men is, generally, toward panels glued up with silicate of soda; the majority, I would say [p. 335] will not buy veneer stock made with silicate, if they know it. I have talked with lots of them that bought some of it, not knowing it, namely, panels, for the gluing of which silicate of soda has been used. I have heard of the Solva Glue, put out by the Solva Waterproof Company. I have seen that glue used in the plant of the West Michigan [p. 336] Furniture Company. That was the first part of 1915. When I saw them using it they were using it for veneering basis, preparing it in a vegetable glue converter and applying it with a spreader, gluing up different kinds of panels, and also making what they call "tops"—5 ply tops. They are for—as made by West Michigan Furniture Company—for dressers and chiffoniers and dressing tables.

[fol. 499] Cross-examination by Mr. Macauley:

If I remember correctly I say Solva Waterproof Glue used in the West Michigan Company's plant three dif-

ferent times in the first part of 1915, probably ten days to two weeks apart. From the first to the last, it would be a month altogether, between the first and the last time I saw it there, I suppose. We have a record at the office in [p. 337] South Bend that will show when I was there. I have no record here in Grand Rapids. I refreshed my memory on the record at South Band as to what time I was there before I came up here, just before this case started. This case started a week ago last Friday, didn't it? It was just a couple of days before I came up here on it the first time. As to the record I had showng when I was at the West Michigan plant, that is what we call our "Information Card Record." I made a report of my call to the office and then the information was put on the card. I suppose there is also a copy of my report there. I did not then see a copy of my report. I didn't look that up; I took it from the information card, which is practically a copy of the report. There was something about Solva on that record. It is simply said that I found them using Solva Glue. As to how often did I say on that record I saw them [p. 338] using Solva glue,— I don't know as I could tell you that; I didn't count the number of times the word "Solva" was on there. That record shows each of these three visits I have spoken about, if I remember correctly. It showed all of them that I made report on, I don't know whether I made a report on all three visits or not. As to what the record stated as to my visits to the West Michigan plant,— well, when we were sent out soliciting business for Perkins Glue, we were supposed to report what we found them using, or what they were using at that time; also to obtain the price of it, if we could; who they bought it from, what kind of glue—I couldn't tell every word that was on the cards now. My best recollection of what was on the cards is, that I called there and found them using Solva Glue. They were buying it from the Solva [p. 339] Waterproof Glue Company, of Chicago. As to how did I know that; well, their mark was on the bag. I don't think I put that down on the card, that the mark was on the bag. The card was made from a report that I made. The cards were dated the date of the report. If I remember correctly there were three items, three visits. I wouldn't be positive about [fol. 500] three, I know there was two; I remember dis-

tinctly there was two. The information on these cards was copied from a report made by me. I know that because it tells practically what the report says. I did not compare this report with the cards, not at this time, but I made the report in the first place, and could remember something about what it contained. These cards give the dates of the visits to West Michigan. I don't remember the dates exactly. They were the first part of 1915, and I think it was February, but as to what the dates were, I don't just remember the date. I would say the two visits I remember were ten days, may be two weeks, apart. I remember that from my recollection of the cards that I looked at; as I remember the dates, they were ten days to two weeks apart. I did tell the West Michigan Furniture Company what I was there for at the time I made these visits. I told them I was there to sell them Perkins Glue talked with Mr. Hummer in regard to it. I have stated that the Empire Veneer Works were using silicate of soda for box shook. As to whether I know of my own knowledge that they did not use silicate of soda for any other veneers— furniture veneers;—well, the stuff I saw them gluing, I also saw them nail these cleats and battens on, which went into box shooks. Possibly they may have sorted out the real best part of it, which would be a small [p. 341] percent, but as to whether they sold it to furniture people or not, I couldn't say. As to how I know it would be small per cent;—well, because their methods of manufacture would not be considered in the class for furniture work, exactly; the cutting of the veneer and everything that way; they don't sort their logs at all; take them just as they come, good, bad and indifferent, all went in. The Breece Co. commenced to use Perkins Glue in 1915. They have used some right straight along since then; we have been selling them glue since then. We have not been selling them all the glue they used. In a general way I know something about the instructions that Hood & Wright and the West Michigan Furniture Company have received from other people who have sold them vegetable glue, other than Perkins. I know this from asking them how they prepared it. I cannot say I have seen written instructions in each case. I have heard from them the instructions gven them by salesmen of [p. 342] other glue companies.

All that I have heard has been what they have repeated to me in their case. I have seen written intructions in some cases.

[fol. 501] Doctor WILLIAM M. GROSVENOR called and sworn as a witness in behalf of plaintiff in rebuttal, testified as follows (Jan. —, 1921):

Direct examination by Mr. Crosby:

I reside in New York City. I am a consulting chemical engineer. I am the same Doctor Grosvenor who testified on the original trial of this case, in behalf of plaintiff. Briefly my experience with regard to the gluing up of furniture veneers is as follows: I have been directly interested in the gluing up of furniture veneers for the last ten years, and have visited about twenty different plant-, in which I have made a careful study of the gluing methods and glue used and results produced. About fifteen of those were in this country, three in Germany and one in [p. 343] Austria. I have also given a good deal of study to the use of a number of different adhesives, including the vegetable glue, animal glue, and silicate of soda, and made a great many tests of the result produced by different types of adhesives. My experience with adhesives in the broader sense has extended something over 20 years. More than twenty years ago I was familiar with the use of silicate of soda in many of its uses, although not as applied to wood work. It was not until 1912 or 1913 that I became interested in the use of silicate of soda in connection with wood work. I have been studying or making tests of vegetable glue for veneering for ten years. I will state my experience with silicate of soda. The peculiar fitness of silicate of soda is in the making of cements, of which many of the chemical cements and putties are typical. It is used in that way for closing joints, to make them acid proof, and the greater part of my experience from 1900 to 1906 or 1907 was in chemical plants where acid was manufactured and where silicate of soda was very largely used in that way, as an adhesive for binding together materials, or for surfacing over materials, to render them acid proof. In that way, I became thoroughly familiar with the properties of silicate of soda. The

company that I was with also manufactured a great deal of silicate of soda; so I became somewhat familiar with the method of manufacturing it, from which its properties, of course, could be more or less inferred. [p. 344] In 1909 to 1914, I was more or less occupied with the use of silicate of soda as an adhesive for paper, for which it is particularly adapted in making cartons, on account of its quick setting qualities and the fact that, when freshly applied, [fol. 502] it permits more or less of the binding that is necessary in paper cartons. Since then, between 1912 and 1914, I had occasion to make a study of its possibilities as applied to wood work. I have made a number of tests with silicate of soda for joining wood layers or veneers or wood surfaces. The tests made, were the usual block tests; that is, fastening blocks of wood together with the silicate of soda or with the silicate of soda mixtures, and then pulling the blocks apart with a measured pull, to determine the strength of the joint. The silicate of soda was tested a number of times alone, during the period of 1912 to 1913, and it was also tested, usually, with starch in small proportion. The joints made alone gave tests as high as three hundred and sixty pounds; that is, using silicate of soda alone gave tests as high as 360 pounds per square inch. Others ranged around 340, and the lowest that I obtained was 320 pounds per square inch. The average would be about 335 pounds. Also I used it with 15 per cent of corn starch, and used in that way, applied it both mixed cold and also mixed hot; what we call the "hot burst." Used cold, or mixed cold, the highest test I had was 310 pounds; others in the neighborhood of 287, and the lowest was 240. Used in the hot burst, but applied after cooling, or when cool, [p. 345] gave similar results, only slightly better. The best, used in that way, was 390 pounds; others around 333 and the lowest about 250. Pounds per square inch; the number of pounds necessary to pull apart a square inch of the surface. A square inch of glue line, so to speak. Grouping these results as a whole, no one of the tests has showed strength even half as great as that of vegetable or animal glue used in the ordinary veneering work; the ordinary grades of animal or vegetable glue used for veneering. I have also kept pretty close track of the literature

and the studies that others have made, and have seen published articles confirming that result of my own experiences that the strength of the silicate of soda joint is half or less than half the strength of the ordinary veneering glue. In my opinion silicate of soda is inferior to vegetable glue as an adhesive for veneering. In the first place, silicate of soda is a mineral, and, as its popular name "water glass" indicates, in its dry condition, it partakes of the nature of glass. It is a substance with a very small coefficient of expansion, or change in length, under the variations of temperature. It also has very slight change in dimen- [fol. 503] sions with change of humidity. It is therefore eminently suited for cementing glass, or brick work, or mineral substances, which have similar degrees of expansion and contraction with changes of temperature or changes of humidity; but it is unsuited for cementing together, or gluing together materials which [p. 346] have large coefficient of expansion, either with variations in temperature or variations in humidity, such as are exhibited, as is well known, by wood work. The result of the different expansion or contraction in the cement material or glue, on the one hand, and the body which it is binding together, or aims to bind together, on the other, sets up heavy strains between the material of the joint and the substances being joined, and makes the joint, in many cases, tear itself apart entirely; in all cases subject it to strains which render it less able to do the work for which it was intended, or weaken the joint seriously.

Another quality of silicate of soda which tends to unfit it for wood work, particularly veneer work, is that it sets very quickly, and particularly on the surface. It is a loose chemical compound, between soda and silicate, and even the carbonic acid of the air is capable of uniting with the soda, at the expense of the silica, and leaving the silicate ununited. Disintegration of the chemical components of the material. That causes silicate of soda to glaze over the surface exposed to the air, rapidly, forming a glassy skin, and once that skin has formed, the treated surface does not wet another surface against which it is placed, because of this little skin of glass on the liquid, and this produces, if it occurs, a complete failure to join with the opposing wooden surface, and results, practically, in "blisters,"

as they are called, which are places where the joint has not met; where the silicate of soda has not taken hold of the other veneer, from the one to which it was applied originally, and practically had not bound the two together, and has left them to open or spring out when the pressure was taken away. A slightly longer delay in bringing the veneers together, permitting a considerable portion of the surface to glaze, will practically prevent the veneers from ever taking hold of each other, except here and there, in small spots. This characteristic of silicate of soda makes it peculiarly fitted for paper works, where it goes through very rapidly, in which pieces are brought together promptly, but peculiarly unfits it for veneers that, for economical work [fol. 504] ought to be stacked up in piles. The faces should be closed up within fifteen minutes, or less, as a rule, and that is not a very long time to build up a stack of veneers. Furthermore, silicate of soda dries rather completely when it dries; it hasn't the characteristic of cellulose or starch in wood work, of holding a certain percentage of moisture that keeps it a little pliable or plastic and enables it to adapt itself to strains and circumstances; consequently it is excellent for rigid bodies like glass or brick work, as indicated, but it weakens with time, as it completely dries out, and loses its adaptability and becomes brittle, as glass is, and tends, as the carbonic acid of the air gets to it, to granulate or crystallize, and all through that period or dryness, it is extremely subject to shock or strain. As veneers are stacked up, they do not come in contact with each other at all completely until after the pressure is brought on by the press. That gives the first opportunity for the air to have access to the surface and glaze it over. Later, after the glue is set, then the veneers are taken apart, and the wood is entirely previous to the air, so that the glue line, whether it be vegetable glue or silicate of soda, is ultimately acted on very fully by the carbonic [p. 348] acid of the air. Regarding the way veneers go into the press, as they originally go through, they are more or less wobbly; they only touch in half a dozen relatively small spots in doing their moistening, until the pressure is brought to bear to force the surfaces together. Vegetable glue does not have the disadvantages I have pointed out. As to whether silicate of soda works better in the South than in the North;—it

has been my understanding, gathered from reports of the locations in which it is used, that it does, and I have sought an explanation for the fact. Silicate of soda varies in its fluidity very rapidly with changes in temperature, and, if it becomes unusually fluid, is liable to penetrate with a great deal of ease into the wood. If the weather becomes cold, it becomes very much thicker and does not penetrate. As silicate of soda is purchased from the large manufacturer in the already dissolved form, and the customer is not familiar with the dilution or concentration of it, it does not lend itself to localities where changes of climate and temperature are considerable and rapid. Furthermore, where changes in temperature are sudden, there are great variations in humidity and great uncertainty as to how long you can leave a surface which has been spread, before this glazing action takes place. The glazing action is a com- [fol. 505] bined drying and carbonating action, and if it is a warm day today, and humid, and there is a sudden change, so that the humidity tomorrow morning is extremely small, some workmen, going to their factory today, would produce very poor results, because [p. 349] this quick drying of that glazed surface would be unexpected. Therefore it is generally true, I believe, that much more satisfactory results, even in the cheap grade of work, are obtained in the South, where the climate is more mild, humid and equable. For the reasons above indicated, I think, for the general run of furniture veneering, it would be wholly unsatisfactory. For certain cheap grades of work that are only to be used once, and particularly where that use can occur during the period of gradual final drying out of the silicate, while it is still a little adaptible, such as box shooks made up and used only once and generally destroyed, it is practical. For classes of work where the plies are held together afterwards by nails, so that the nailing takes a considerable portion of the edge strains where the strain has accumulated most, it is valuable, but for the general run of veneer work, I should say it clearly was not.

[p. 350] WILLIAM M. GROSVENOR, being again called and sworn, testified as follows (Nov. 9, 1921):

Direct examination by Mr. Crosby:

I will explain what I understand is meant by degenerated starch. When starch is treated with acid or alkali, or enzymes, or is acted on by bacteria under favorable conditions, the extremely complex arrangement of the atoms which go to make up the starch molecules is simplified. The size of the groupings is understood to be broken down in smaller groupings, and in consequence it is commonly said that the starch is knocked down or degenerated, in the sense of being unbuilt. In a similar way in the trade starches which have been so treated are called fluid starches or fluidity starches, because the recognized evidence of this resulting condition, a condition of degeneration, is that the starches when treated with water or put into solution in any of the ordinary ways, exhibit less viscosity, or greater fluidity; so that viscosity has come to be recognized as a measure of the extent of complexity of the molecules, and the lower viscosity is recognized as the measure of the ex-[fol. 506] tent of degeneration, or condition of degeneration of the starch.

It is obvious that this condition may be arrived at in either of several ways. The starch as it is formed in the plant is formed by the joining together or coupling up of [p. 351] smaller carbohydrates molecules or groupings of atoms, and this probably progresses more or less step by step from the sugars through the dextrine and the soluble starches into the more or less lower viscosity materials, and so on up to the higher viscosity. It therefore amounts to the same thing, whether a starch be taken which is of high viscosity and is degenerated so that it is said to be a degenerated or knock-down starch, or whether in the up-building process, material is selected which has not been generated, has not finished its building up. In either case the material is said to be in a degenerated condition. I have read the testimony of Messrs. Seligman, Wilson, Grossman and Epstein, produced on behalf of Defendants. As I understand their testimony it is to the effect that the vegetable glue base of the Kane Manufacturing Company,

used by the Defendant Holland Furniture Company, has not been properly subjected to a degenerative action, but has not received so much washing as some other [p. 352] starches, and therefore has retained original substances from the root, which do not swell very much, and therefore the base is lower in viscosity than Royal Cassava Starch for example, because by repeated washings some soluble as well as other materials which are in the intermediary stage of starch are removed, and the presence of these is responsible for the relatively low viscosity which the Kane product possesses. As to the reason for the Kane base having such a low viscosity; it is quite possible that the low viscosity of the Kane base may be due to the presence in the base of low viscosity materials originally present in the root, which have not been completely washed out or separated in the preparation of the starch. The testimony referred to, in my opinion, clearly shows that the Kane base is in a condition of relatively low viscosity, certainly as compared with the Royal Starch referred to, and approximately falls half way between the commercial product of the Perkins Plant to which the testimony has referred, and on which Mr. Grossman with his viscosimeter obtained a figure of about 60, as compared with about 190 for the Kane base and about 166 viscosity for the Royal. It becomes even more apparent how near the viscosity, rela- [fol. 507] tively near the viscosity of the Perkins sample this Kane base really is when it is remembered that the Royal of today is showing viscosities in many cases not much more than one-third the viscosities of some of the older starches.

Compared with samples of cassava starch that I have recently prepared myself by direct washing from the root, this viscosity of 166 for the Royal is relatively low. On reading the testimony I had a viscosimeter complying with Mr. Grossman's description, made by the apparatus house of Einer & Amend of New York, and to check it up compared it with water, as described by Mr. Grossman, and at 80 degrees obtained a measurement of 26 seconds for water, and in order to make sure that it was substantially correct, took the viscosity of the Kane base with the same instrument, after putting the base in a solution described by Mr. Grossman in his testimony, and allowing it to stand

for two hours, and on two test- obtained the figures of 95 and 105, about, as compared with Mr. Grossman's single test of 100, so that the instrument was indicating correctly as compared with the scale on which Mr. Grossman was working, and with this same viscosimeter tested some of this starch prepared by me, after putting the starch in solution in the same way, and obtained viscosities varying from 264 to 532, depending on the extent to which the starch was washed, showing that Royal, at least the sample cited by Mr. Grossman, would not, on comparison with the other starch, be regarded as of equally high viscosity, and therefore would be regarded as relatively a degenerated starch.

The roots from which I prepared this starch were, owing to the necessities of transportation, not wholly fresh, so that I don't regard that starch as having been wholly free from action which might have lowered its viscosity.

The Kane base I believe, however, is not low in its viscosity merely because it has not been thoroughly washed or cleaned up, if that be one of the reasons, but also I believe because during the process of its preparation it was in my opinion subjected to more or less fermentive or bacteral or enzymic action in the tanks in which it was being separated from the water wash water with which it was originally separated from the root, and possibly subsequently washed to further separate the rooty material. Whatever the causes may be, whether it be that the low viscosity material which was originally in the root has been [fol. 508] neglectfully admixed by leaving it with the starch, or whether the high viscosity material in the root was first separated and then acted upon to degenerate it, and [p. 355] actively lowered its viscosity, the fact remains that the viscosity is relatively low as indicated by the testimony of both Mr. Grossman and Dr. Epstein, and that it may be correctly called a degenerated material. Briefly, what makes me think there has been some degeneration which has taken place in the Kane base by reason of bacteria or enzymes, or something of that sort, is the appearance and odor of the starch, and the slightly excessive acid figure, which is slightly more acid than a pure starch I think should be, and I believe that acidity to be one of the evidences of its having been subject to fermentive action,

or the action of some acid, probably fermentatively. Fermentative or bacterial action will produce an acidity of the starch. The patent in suit speaks of starch of relatively low water absorptiveness, or of reduced water absorptiveness of the starch. The phrase "low water absorptiveness" is in some respects at any rate equivalent of low viscosity. It is another way of saying that in order to get a liquid of a given thickness or density, the starch of low viscosity requires little liquid, little water, it absorbs little water in order to make a liquid of a given flow or characteristic behaviour. That means it has already absorbed practically [p. 356] all the water it will take in a sense. It means if you have a weighed quantity of dried starches, dry, in the ordinary commercial sense or in the chemical sense, and you wish to make a liquid from each starch by putting it into solution, either with caustic soda or with hot water, and you wish these two liquids, one of each of these samples of starch, to have the same viscosity, and one of those starches has a low water absorptive or low viscosity figure, and the other has a high viscosity figure, or high water absorptive power, you must use in the latter case a much greater quantity of water to get a liquid of the same general characteristic fluidly as you would have to use in the other case. Whether it be that the starch in the process of acquiring a low water absorptive power has already taken some water to itself chemically is more or less a matter of discussion, but I think there is no question about the substantial equivalent meaning of the two phrases, that is, the low water absorptive starch makes a low viscosity starch. If the degenerated or low viscosity condition of the [fol. 509] defendant's Kane base was due wholly to lack of washing out the more soluble starch, or less water absorptive starch, I think it would not make any substantial difference so far as making a veneer glue therefrom is concerned. The technical effect would be the same. The result would be obtained by two different methods, both clearly indicated by the Perkins Patent. There would be no substantial difference between taking the carefully purified starch from the plant and grading its mean viscosity down to a desired point, or taking the unpurified material and washing away material of low viscosity so as to grade its mean viscosity up to a desired point. The first is de-

scribed [p. 357] in detail in the patent as being the method perhaps most readily followed by a novice, but the latter is clearly indicated also on page 3, line 79 of the patent in suit, where the inventor says "thus by a proper adjustment of conditions of mixing I am able to produce this glue even with certain grades of untreated cassava carbohydrates," etc. I think they are entirely technical equivalents. The phrase "untreated cassava carbohydrate," as used in the patent, I think means cassava carbohydrate which has not been subjected to any special process for the purpose of further degenerating it. In other words, cassava carbohydrate just as it comes on the market.

[p. 358] Proceedings of Thursday, November 10, 1921

Dr. William M. Grosvenor on the stand:

Cross-examination by Mr. James A. Watson:

I referred to the viscosity of 166 obtained by Mr. Grossman for Royal as relatively low. By the words "relatively low" I mean low as compared with starches that I have prepared myself under moderately favorable conditions and avoiding fermentation, and with fairly thorough washing. By "relatively" I mean from a half to perhaps a third of the viscosity of those starches which I have prepared. As to how would that viscosity of 166 for Royal compare with the viscosity of Royal say ten or twelve years ago, I know something of the viscosity of such samples of Royal as we had in our work ten or twelve years ago, but didn't at that time have that type of viscosimeter that Mr. Grossman used, nor did we make any of our solutions for testing in that way at that time, so it would be difficult for [fol. 510] us to compare except by general opinion. What I can compare are the results which we have been getting on such Royal as has been purchased, by the same test that we used ten or twelve years ago. As to "we" I have made some of the tests myself; I have watched some of them made, but in the aggregate the tests are in the routine practical tests that are made for my own advice for the benefit of the factor in [p. 359] judging what treatment to apply to the material. Those viscosities, taking the average of

all we received for Royal, in 1911 was 77½; in 1912 was 102 and about a half; 1913, 93.7; 1914, 90; 1915, 78½; 1916, 82; 1917, 77; 1918, 52; 1919, 60; 1920, 41. By the "factory" I mean the Perkins factory. I hardly think I would call this Royal grade a raw cassava, the way that term is used in the patents in this starch glue art. Certainly the old was not in the condition in which it is received by us today.

In amplification I might say, that the word "raw" is used perhaps in two senses. In a loose sense it is used as applying to a material which is in the condition in which it comes on the market. Of course in that sense this Royal is raw. But in the sense of its being a high viscosity starch requiring treatment in order to fit it for use as vegetable glue, I question whether I should regard the present Royal as being raw material. As to whether I would call the Royal which I have referred to as having tested in 1913 and 1914, testing in the nineties, as raw cassava; I can't say positively because I have never attempted to see how far I could adjust what Perkins describes as the conditions of mixing by which he was able to produce this glue, even with certain grades of untreated cassava carbohydrate. As to what authority I have for the second interpretation or definition I have given of the term "raw cassava," that is, with reference to viscosity [p. 360] I have used the word in that sense a number of times myself and I have heard other people use it where I felt that was the sense in which they interpreted the word "raw." I think that the only literary reference there would be to the word "raw" would be the antithesis to "cooked," and of course none of the materials are cooked, so anything uncooked would be raw. The finished dissolved glue is raw in that sense in case of a cold burst, but that is obviously not the sense in which the word is used as applied to different starches. In a state of nature, that is the sense in which "Raw" is used when we speak of a raw starch as it comes on the market. When we speak of high grade raw material or the raw ma- [fol. 511] terials in the sense of materials introduced into the processes, as referred to in Perkins patent, I think the patent has to speak for itself more as to just what is meant by that use of the word "raw." As "raw materials" it is distinguished by the ordinary use of the word "raw" as uncooked, or "raw" as against specially

treated starches. As to when the patent speaks of "The raw carbohydrate," it refers to the starch as it comes on the market from the factories. That is in the specific example, and that I would say that Perkins referred to raw carbohydrate as meaning any material which he was treating. I think the carbohydrate that he refers to as "raw" in the Perkins [p. 361] patent, is cassava carbohydrate or cassava starch. Going back to the scale of average viscosities of Royal starch in 1911 to 1920 which I have testified to, and as to where would you draw the line in this scale between what would be termed under this Perkins patent a raw grade of Royal and [p. 362] one which I would not consider raw; at present I would not undertake to draw such a line at all. The decision of the question, what would be raw starch, if by that you mean a starch which would require treatment, I would not undertake to decide without prolonged experiment to ascertain in the case of the particular sample of starch.

First, whether it complied with the tests given in the patent, marking it as a material already fit to be used in the making of vegetable glue, and after having made those tests, if I found that the material was not apparently suitable for the immediate manufacture of vegetable glue without processing, I should have to undertake, in the case [p. 363] of that particular sample, to try to adjust the conditions of mixing to see whether I could get vegetable glue that would fall under the specific description of line- 78 to 82 of the patent, page 3.

By Mr. Watson:

Take the patent to Frank G. Perkins, number 1,078,692, which was applied for March 16, 1912, just before the patent in suit issued, of which I hand you a copy. Perkins, in this patent, at line nine, page one says:

"The invention relate to improvements in processes for making vegetable glue, and more particularly improvements over the processes claimed in reissue letters patent number 13,436, and letters patent number 1,020,656."

[fol. 512] "According to the process described in those patents a suitable carbohydrate base was first treated to decrease its water absorptive properties, or so proportion the relative viscosity, cohesiveness and adhesiveness of the resulting product, when the carbohydrate was dissolved in about three parts of water and a suitable solvent of cellulose, as caustic alkali, that the resulting product was suitable to glue up veneers."

Then at line 38, page one, he says: "One main object of the present invention is to so modify or improve those processes that the whole process may be carried out in one substantially continuous operation in shorter [p. 364] time, and with much less labor and expense, and so that large consumers will be enabled to make up their glue from raw carbohydrate in a simple and efficient manner and without installing any additional special apparatus."

The patent, in the Perkins, beginning line 65, page one, refers to as "raw material" as "cassava flour of the grades M-4, M-5, or 'Royal' "; and then gives examples of the improved process of making glue from the raw carbohydrate in one substantially continuous operation, and Example Number Three, at line 93, page 2, states how Perkins proposes to make this improved glue in a one-step process by the use of cassava flour sold on the market as "Royal."

Isn't it your understanding that in this patent Perkins referred to "Royal" and the other grades mentioned as raw cassava, as distinguished from cassava or starch treated to reduce viscosity by the method of the patent in suit?

(Witness:) It is my understanding, provided I may be permitted to point out that as stated in my previous testimony the word "raw" has been used in two senses. Undoubtedly the reference in this patent to raw carbohydrate is in the more general and simple sense.

[p. 365] By this patent I mean 1,078,692. All material which has not been subjected to a preliminary treatment to accurately adjust its viscosity. It, however, seems to me that this has no bearing, or indication whatever as to whether the particular M-4, M-5, or Royal may or may not —which was considered in this patent—may or may not respond to the broader general tests given in the original

master patent. That latter being patent in suit, being 13,436.

It is my understanding that the original patent gave a series of specific tests to be applied in selecting material for [fol. 513] putting into solution for mixing up as glue, and that Patent 1,078,692, is a more specific detailed description of certain improved methods of mixing which may fall entirely outside or inside of the scope of Patent 13,436, according to the interpretation which it should be given when the question of interpreting that patent comes up. I don't think it necessarily indicates at all that this material might not have required to have used upon it any preliminary treatment in order to make it possible to use as a glue, but that it indicates a method of using raw materials in the sense of materials which came upon the market but which had not been of the preferred viscosity described in the specific example of patent 13436.

(Mr. Watson:) Then, as I understand you, the terms "raw carbohydrate" and "raw material" (page 2, line 71), used in Patent 1,078,692, refer to raw starches as they come on the market, is that correct?

(Witness:) Those particular grades mentioned and similar grades, yes.

[p. 366] (Mr. Watson:) What if any difference is there between the method of manufacturing glue from this raw cassava, of the "Royal" grade, specified in lines 94 to 111, page two of this patent 1,078,692, and the method defendant in this case uses in manufacturing glue from the Kane Base?

(Witness:) There are many differences. In the first place, defendant uses two and a quarter parts of water and the Example gives two and three-quarters. In the second place, defendant uses four per cent caustic and the example gives seven per cent caustic. Third place, defendant adds its caustics in about fifteen minutes and the example instructs us to add the caustic during a period of three hours. In the fourth place, the defendant maintained the agitation and so fourth, and heat, at a fairly high temperature for about fifty-five minutes, whereas, there is no such high temperature indicated in the example.

I base my knowledge of the defendant's practice on what was shown me at their factory, combined with statements

made to me by their workmen and their foremen at the time which I inspected operations with their consent. So far as I know, the precise temperature at which defendant mixed their glue was not taken, but the steam was turned on and the glue allowed to heat I should judge to about 150 Fahrenheit for a considerable period of time. The precise temperature I did not take nor is it my understanding that [fol. 514] they governed the operation by a thermometer, but the temperature was about 45 to 50 degrees higher than I would expect to use in carrying out the specific example given on page two of Patent 1,078,692.

[p. 367] By "a considerable period of time" I mean about ½ hour. (Witness continues) As to how much of the defendant's process have I stated from actual observation and how much from what may have been told me by others; the details as to time and temperature, as I recollect now, were largely from statements made by the foreman and confirmed by the workmen, and to some extent as I recollect it, and the answers to the interrogatories. The proportions were confirmed by analysis of the finished glue taken. Analysis by me.

(By Mr. Watson:) I find the distinction between the treated or socalled degenerated base of the patent in suit and raw cassava, also referred to in the Perkins patent number 1,078,691, in which it is stated at line 71, page 1:

"In the process described in the said reissue letters patent number 13436, all the material is affected by the preliminary treatment, so that it is believed the mean polymerization of the starch is so altered as to properly proportion the physical properties of the base when suitably dissolved."

Without quoting extensively from the Patent, I understand this patent gives the process of producing a glue base by mixing with an over-degenerated starch an underdegenerated or raw starch. The patentee says at line 64, page 4, "It will be apparent that the invention is not limited to the use of any particular grade or quality of raw material nor to any specific proportion in the admixture of these raw materials."

[p. 368] In the Example number One, line 29, page two, of Patent 1,078,691, "raw cassava starch" is mentioned as one of the materials. In example number six, beginning

at line 94, page 3, "raw cassava," grade M-4 is mentioned, also in Example number 4, page 3.

Is it your understanding that these references to raw cassava in this patent refer to the cassava as it comes on the market?

(Witness:) I could not state without particularly studying the patent in question with reference to this point. I should not like to answer finally, but that is my impression from the present reading.

(Mr. Watson:) Can you point out any material difference between the process of making a base for wood glue, set [fol. 515] set forth in claim one of this patent, and the defendant's International base as you understand it to have been manufactured? (Witness) Not from my limited knowledge of the method of manufacture of the International base.

[p. 369] (Witness continues) I am the patentee of patent number 1,200,488, which is assigned to the plaintiff, Perkins Glue Company. (Mr. Watson) In the only specific example of the process to which that patent relates, mentioned in the patent, page one, line 68, you say "As an example of my invention for making a glue I take 250 pounds of raw cassava starch, or meal, of medium quality." Do you there refer [p. 370] to cassava as it comes on the market? (Witness) One of the varieti-s that comes on the market, some of them. I am the patentee of Patent 1,299,705, to William Grosvenor, assigned to the Perkins Glue Company. (Mr. Watson) At line eight, page three, and line 54, page three you refer in this patent to "raw cassava," and at line 45, page 4, to "good quality of raw cassava." Are we to understand that these references are to cassava as it comes on the market? (Witness) Some of the grades of cassava as they come on the market, yes. As I explained before, the word "raw" is used in two different senses, and so far, when I have referred specifically to "raw" in a more limited sense of the high-grade starches to which Perkins found it necessary to apply his treatment, I have generally applied the more specific term in applying qualifying adjectives to the word "raw." Virgin would express it were it not for the fact that apparently in the plant itself there are various grades of material of the general carbohydrate character and within the starch group there are probably

grades which differ in character, in viscosity, and virgin would be subject to the same possible misinterpretation or quibbling about its precise meaning as almost any other word that we could use. The patent in suit does not, as I understand it, state that all grades of raw material require treatment, but that certain grades he prefers to treat. I am not quite clear there should be any attempt to draw a sharp distinction between whether the materials come on the market in a state of fitness or unfitness because the patentee has described the possibility of making the material which he prefers to use by a treatment, but (p. 371] stating that he can use at least certain grades of material which are not treated. (Mr. Watson) In your last remarks you have stated that the patentee of the patent in suit refers to "certain grades he prefers to treat." If there is any [fol. 516] such statement in the patent will you quote it? (Witness) "The preliminary treatment, however, substantially reduces the absorption of water by starch and prevents it from becoming jelly like and tough when afterwards treated either with water as above indicated or with alkali, or both." On page three, line 84. Clearly the patentee had in mind certain starches which did not lend themselves readily to his process of putting them into solution without special treatment. There are many passages in the patent which in my opinion indicate the same thought. I am trying to point out the portions which bear on the question. Page one, line [p. 372] 68, the patentee says, "To do this I first take a carbohydrate of the proper kind and treat it with a reagent to decrease its water absorptive properties in the sense that to render fluid the finished glue, comparatively, little water will have to be added and the final glue will not thereby become seriously diluted." That almost defines the general class of material which the inventor prefers to take in order to obtain a suitable even grade of commercial material, something which would be a preferred product of this patent. Indicates that he prefers to take something which is too high in water absorptive properties and regulate it downward. [p. 373] I will give references:

Page one, line 95 "After being treated as above, the dried material may be mixed with a small amount of water and with a solvent of amylo-cellulose, such as caustic alkali,

and a glue produced the strength of which when dry is superior to the lateral strength of wood fibre."

Page 3, line 60, "As previously stated, when ordinary starch is heated with water, it absorbs enormous quantities of water, and if only two or three parts of water are used becomes a stiff jelly-like form which must be very much diluted before it will be practically workable."

Page 3, line 74, "And by the use of cassava starch in particular, results can be secured entirely different from those hitherto produced, as stated by others, preferably corn."

As a negative distinction by contrary properties, "The preliminary treatment however, substantially reduces the absorption of water by the starch and prevents it from becoming jelly-like and tough when afterwards treated either with water, as above indicated, or with alkali, or both." That is at page 3, line 84.

[p. 374] The patent does not give any specific description of particular grades as such that the inventor pre- [fol. 517] fers to treat but he describes the treatment of carbohydrate of a certain kind, and he says Page 2, line 89: In commercial use I preferably ship the dry material obtained as above to the consumer who carried out the second part of the process at the place where the glue is to be used. All through the patent there are numerous references and the whole atmosphere of the patent is that such grades as are necessary to treat to get his preferred result, may be treated. What I have stated is partially inference, but stating facts as to the passages which appear here and which have been quoted.

(Mr. Watson:) Now, Dr. Grosvenor, bearing in mind that the law and practice require a Patentee to describe his invention in full, clear, concise and exact language, will you please quote on the record any statement in the patent in suit to the effect that the patentee may use in the process of the patent, untreated cassava carbohydrates, excepting for the purposes of this question the statement you have called attention to at Line 79, page 3 in your direct examination, and please avoid your own interpretation.

(Witness:) I cannot answer that without involving what I interpret the language [p. 375] to mean. The language of

certain descriptions of the glue base or materials to be mixed with caustic and water in the making of the glue, describes the properties of that material independently of any specific treatment, at lines 34 to 39 page 4; 40 to 43 page 4; at lines 109 to 113, page 4, it states that certain advantages of my improved process may be obtained to some extent even though other materials be mixed with the amylaceous material to form the glue base.

The first passage on page 4, line 34, reads: "The carbohydrate glue base in the preferred form retains substantially unchanged the size and general form of particle as viewed under the microscope when treated with cold water, and produces opalescent cloudy solutions with water at 200 degrees F."

The passage at line 40 of the same page reads: "When treated in accordance with my process I find that the carbohydrate glue base may be formed into glue by using only from 1 to 3 parts of water." The other passage I quoted. I am referring solely to the body of the specification.

(Mr. Watson:) Now, referring to the quotation in your direct testimony at line 79 page 3, reading: "Thus by proper adjustment of conditions of mixing I am able to produce this glue even with certain grades of untreated cassava carbohydrates;" you are sufficiently acquainted with the record of this patent and the patentee to know that [fol. 518] this statement was introduced into the record and into the specifications of the patent by [p. 376] an amendment made after the death of the patentee? That is the case, is it not?

(Witness:) I never knew Mr. Perkins and cannot say from recollection the date at which that passage first appeared in the specification or whether or not it first appeared there subsequent to his death. It is in there in the issued patent.

(Mr. Watson:) You are familiar, are you not, with the patent to J. B. B. Stryker No. 1299809 issued on its face to the Plaintiff company, copy of which I hand you?

(Witness:) I have seen the patent but I am not familiar with it. I have never given it any particular study.

(Mr. Watson:) This patent at line 39 page 1 reads: "I find, however, that a vegetable glue can [p. 377] be made suitable for this work by using mainly, if not wholly, raw

cassava starch with an increased amount of water and a suitable amount of alkali." And on page 2 at line 89 it reads:

"Example 2: 55 parts of raw cassava flour, having a viscosity at 20 to 1 of 90, are mixed with 45 parts of treated cassava having a viscosity at 9 to 1 of 70, and this mixture dissolved with about 4 and ½ parts of water in caustic alkali, in the manner above described."

At line 95 page 2 and at line 53 of the same page, raw cassava is also referred to. Is it your understanding that this raw cassava referred to in this patent is cassava just as it comes on the market?

(Witness:) It would seem to me from such passages as you have pointed out that the interpretation of the words "raw cassava" referred to in this patent, should be cassava flour as it comes upon the market.

(Mr. Watson:) Now, we have found in these patents which have been referred to in this cross-examination, numerous references to raw cassava which you understand to be cassava flour as it comes on the market? Can you point to anything in these patents or any other literature in which the term raw cassava has a different meaning?

[p. 378] (Witness:) In the patents to which you have referred, I do not recollect any statement which draws a distinction between raw cassava in the sense of starches as they come on the market and the phrase Old Raw High Viscosity starches which I have sometimes used, in the Litigation, I think in the record of this case, if you include that in the literature or my knowledge.

(Mr. Watson:) I meant to exclude the testimony in this case but not any printed publications that may have been referred to in the case. With that understanding do you [fol. 519] desire to add anything to your previous answer?

(Witness:) I think not.

[p. 379] (U. S. Patents 1,078,691, 1,078,692, 1,200,488, 1,299,705, 1,299,809 received in evidence as Deft's Exhibits 1, 2, 3, 4, and 5 of Nov. 10, 1921.)

(Mr. Watson:) In your answer comparing a starch which has been knocked down and a starch which has not finished its building up, you say "In either case the material is said to be in a degenerated condition." Have you any authority for this conclusion other than your own imagination?

(Witness:) Starches are graded as to their solubility, fluidity, commercially speaking, knocked down condition, or relative degree of generation or degeneration speaking more scientifically, according to their condition as they are presented to us, and all of those terms are more or less synonymous. We rarely if ever know the precise history of a starch. I have not at the moment in mind any literary references to the use of the word "degenerated" as applying [p. 380] to a starch of that character, but I am confident that such references could be found and it is certainly not an imaginary use of the word. When we speak of a starch in that condition of low viscosity being degenerated, as in the case of defendants base, we say that it is a degenerated starch. If I might add to that answer: in the strict derivative sense of the language, degeneration I presume means that which has been taken from a generated condition downward, but in ordinary parlance we speak of a degenerated starch just as we would speak of a degenerated man, without reference to the fact whether he was ever a good man or a bad man; we speak of what he is as we meet him.

(Mr. Watson:) I understand that with the instrument you had, made by Eimer & Amend, you obtained viscosities which agreed quite clearly with those Mr. Grossman testified to? That is the case, is it not?

(Witness:) On what? I did on water. I did on the Kane base, but I did not obtain viscosities that were very close to his washed cassava starch. On samples washed by me, as distinguished from those washed by him, different roots, under different conditions. The cassava roots that I got and washed were set up by express to me from Florida and sent specially at my request, selecting two kinds of root, one, young roots of approximately 8 or 9 months growth, and the other, collecting old roots of probably 20 months [fol. 520] growth. [p. 381] They were grown in Florida. They were sent up in a barrel packed in damp straw in order to prevent drying out or decomposition, and we were fortunate in getting them sent up during a cool spell. They were ground separately and the pulp produced was washed through a silk bag, with sufficient water to wash through the majority of the starch which would free itself readily from the root fiber. The amount of water used in washing

the first time varied somewhat but was approximately 8 to 12 gallons of water for each 4 or 5 pounds of starch. This crude milk, as it is commonly called when starch is suspended in water, was allowed to settle for about 8 hours. The liquor standing on top of the starch, what would be colloquially called clear liquor although it is cloudy, was then poured off and the sample of the starch was taken straight through the layer from top to bottom, so as to obtain a fair average sample of the deposit of starch yielded from that first liquor. The remaining sediment of starch in the pail or jar was then washed through a silk bag and approximately the same proportion of water, allowed to settle again for about 8 hours, and a washing in that way repeated until about the ninth washing, when a sample was again taken; in a similar way the washings were continued upon the balance of the material in a similar way but using a somewhat shorter period of settlement because the starch as it becomes purified from other wat/ers settles somewhat more readily until the 12th washing, which was likewise sampled. The washing was in some cases further continued and in some cases not. I started out with several different samples,—carrying [p. 382] them through these various washings. Some of them from the same origin and some from—that is from the same roots, but we have washed other lots of roots; I had those in mind also. Not of this particular consignment but likewise sent up from Florida, pretty much to a greater or less degree the same description would apply. The samples taken as above referred to of the crude starch, the ninth wash and the twelfth wash were dried on open trays in an open dryer in which the temperature was maintained at about 105 Fahrenheit, and afterwards the samples were allowed to stand in the dry condition so as to adjust the amount of moisture which they would take up from the air and make them directly comparable. Some of them might have been dried slightly more or slightly less in the dryer, and most of our comparisons are made on air dried starch. The sample when dried after it was allowed to stand for a day [fol. 521] or two, was ground, so as to be able to mix it thoroughly, and was allowed to further stand and equalize its condition of moisture, what we call tempering, letting it come to its natural humidity. The thoroughly mixed,

ground and tempered sample was then taken and five grams of the starch were weighed out, suspended in 175 cubic centimeters of water, and the test of its viscosity, and put into solution exactly as described by Mr. Grossman, and tested with the viscosimeter made by Eimer & Amend, exactly as Mr. Grossman describes. [p. 383] I treated the roots before grinding same merely to remove the black outer skin. I am not positive of the exact location of the town in Florida where these roots were grown, but I think it is very close to the general neighborhood of Lake Mary. Lake Mary is not far from Orlando, but is nearest to Sanford, Fla. As to whether the climate of this part of Florida is very different from the climate of Java, I have not personally been to Java, but I am informed from published reports on the general character of the Island, it has a considerable variation in its climate, and I think that both would be described as Tropical or semi-tropical climates. I understand the climate in Florida varies considerably. I think they have frosts occasionally as far south as Sanford and Orlando. I think rarely, if ever, are there frosts in Java in the sections where cassava is grown.

(Mr. Watson:) It is a fact that starches grown under different conditions of soils and climates, differ quite materially in their character, is it not; that is, starches of the same family of plants?

(Witness:) I have never been able to satisfy myself that that was the case. The proportion of other material likely to be recovered with the starch or the difficulty of removing the other material, I think does differ considerably. The general character of the root or stalk from which the starch is obtained, differs considerably I believe with the climate, but I never have been able to satisfy myself that the fundamental starch substance did differ. I have seen statements to that effect in Patents and Literature, that starches differ according to soil and climate, and I have seen the contrary statement, that the starch grown in a particular plant of a particular species, was specific to that plant and species. There are a very considerable number of such general statements that I have seen, but probably the most authoritative I think would be Reichert's Book on Starches, in which the general behavior of the starch to all sorts of treatment, viscosity determinations, and susceptibility of

different re-agents, are described as means of identifying [fol. 522] the variety, species and genus to which the plant belongs from which the starch has been obtained.

(Witness continues:) So far as I know the Perkins Company at the present time uses little or none of the Florida cassava in manufacturing its glue base. At the time the patents were applied for it is my understanding that they used a great deal if not the greater portion. I believe they get practically all now from Java and other sources of importation. As to the date, edition, [p. 385] etc. of the Reichert Book on Starches, I have not the precise reference here but it was a large two volume book published I think under the auspices of Rockefeller Foundation about 1914, and I think it has not had any second edition. I spoke in my testimony of obtaining viscosities running from 264 to 532, with starches that I manufactured. These figures refer to seconds. In obtaining these high viscosities or in noting them, the fluid flowed continuously from the viscosimeter during the greater portion of the time, it flowed continuously at the outlet of the viscosimeter, but as the stream passed away from the outlet, which I held considerably above the dish into which the stream flowed, that stream broke up into drops. This would be merely an indication that the progress of the material through the hole in the viscosimeter due to its high viscosity, was slower than the action of surface tension, which always tends to break up any falling stream into drops. The stream did not cease to flow as a stream at the orifice. Just below the orifice it broke up into drops, but it flowed through the orifice as a continuous stream. I did not in these tests of mine use roots from Java because I thought there was very little chance of getting roots sent on from Java in good condition. In every case where I have tried to use roots which had been dried I have found very unreliable results. I tried it from Florida roots, I have not tried the Java roots. [p. 386] I have tried Florida roots that have been dried and found very unreliable results. I do not think I could have gotten wet roots, sent in damp, from Java without having the roots subjected to a very uncertain amount of fermentation on the way up. The root ferments very rapidly as a rule after it is dug. As to what I mean by "unreliable results" as a rule when the root is dried the starch is acted

on during the process of drying the root, in all cases that I have observed, in such a way as to greatly lower its viscosity, indicating that it was acted upon in some way during the drying process, but it was no longer the starch as secreted by the cassava plant. As to whether a root which [fol. 523] was dried and transported at ordinary temperatures, degenerate or become degenerated: I think it might or might not depending on the care with which it had been dried, the rate at which it had been dried originally and the degree to which it had been held perfectly dry during transit; I think it could be done but it would take a good deal of care to do it I believe. I stated the Kane base had an odor. As to whether that was the natural odor of starch in the root, I think not of the starch. I think not the natural odor of the root either. As to the natural odor of the dried root, I think the properly dried root, and by "properly" I mean dried without any hydrolysis or fermentation or decomposing action, would probably be almost if not quite odorless. Some roots that I have [p. 387] dried seem to be almost wholly without odor, other roots had a very distinct musty odor; and those roots were the roots which were, in my opinion, subject to more or less fermentive or decomposing action during the process of drying.

(Mr. Watson:) I hand you a piece of dry cassava root and will ask you to pulverize part of it and say whether or not the odor of the pulverized root is not substantially the same as the odor you detected in the Kane base, excepting that the root odor will be stronger.

(Witness:) I have taken a portion of the root and pulverized it with a mortar and pestle. On examining the root before pulverizing it I found there was little or no perceptible odor in the unpulverized sample of root. On examining the freshly ground material I find a very much more distinctive odor, which to my nose is musty, and is not an odor which could properly be associated with a reasonably pure starch. When I said practically no odor with regard to the unpulverized root, I did not mean that it was wholly odorless but that the odor was very faint and did not seem to me to be the characteristically musty odor which appears after pulverizing.

(Mr. Watson:) Will you please now open the jar containing the exhibit sample of Kane glue base from sealed bag,

September 27, 1921, and describe the odor if any which this base has?

(Witness:) I have examined the sample as requested and find much of the same musty odor that is exhibited by the freshly pulverized root. It does not seem to me to be quite as strong but it is markedly different from the odor of the [p. 388] unpulverized root and markedly different from the odor of pure starch which should be odorless.

(Mr. Watson:) In reference to the Kane base, you spoke of it as having a "slightly excessive acid figure"; can you [fol. 524] express the amount of acidity and will you please state how you arrived at this conclusion?

(Witness:) The test made was a rather rough one by comparing the degree of change from blue to red of a dilute litmus solution applied to what was known to be reasonably good grade of starch, and applied to the Kane base the test is relative and therefore cannot be in any standard figures, but that sample was distinctly more acid than in my opinion an unfermented starch should be. The precise character of the acid left in starch was not determined. The test with litmus was not a quantitative test. It was not susceptible to reduction to standard figures. It is however a perfectly well recognized comparative test. Except by inference I cannot say whether the acidity I refer to in the Kane base was due to organic or inorganic acid. To a certain extent the litmus test does determine something more than that there is acid present. The rate of change in color and the character of the change is slightly different with different acids, but it is not distinctive and positive. In this case I did not go far [P. 389] enough to produce any differentiation with certainty. There was unquestionably some difference between the two samples, but I did not go far enough with the examination to determine with certainty whether it was one kind of acid or a different kind of acid. As to whether any material amount of acid present in starch would prevent bacterial action in the starch; a considerable amount would tend to. Small quantities of acid might retard but not prevent. I have stated that the Kane base was slightly more acid than a pure starch I think should be. As to what I understand to be a pure starch:—starches that have been prepared without opportunity for fermentation of bacterial decomposition and have been thoroughly

washed to separate out matters which were not starchy in character. Such a pure or ideal starch would still be acid, to some indicators, to litmus, very very faintly so.

(Mr. Watson:) That results from the fact that in the process of manufacture of such starch the alkali present which might render it otherwise neutral, dissolves out, does it not, whereas the acid principles tends to remain with the starch?

(Witness:) If by acid principle and alkali you refer to accompanying acid and alkali in the root which are not a part of the starch itself, I think that is probably true. The acid in this case, however, impressed me as being greater in quantity than could have been produced from a healthy unfermented root by mere washing and removal of any alkali that might have been present. In other words, greater [fol. 525] than the normal acidity of the starch itself, and that taken together with the musty [P. 390] odor, indicated to me that the starch has been subject during its preparation to some fermentive action. I did apply to the sample of Kane base concerning which I have testified, the test for degeneration given in lines 74 to 81 of page 4, of the patents in suit. I mixed a quantity of the Kane base with two and one half times its weight of water, in a vessel which was adapted to be raised to and held at a temperature of 170 degrees, and in which the starch could be kept mixed with water, and raised the temperature to 170 degrees as indicated by a thermometer held and moved about in the mixture itself, and then observed the character of the mixture after it had reached the temperature of 170 degrees and while it was held in that condition. I should think it took 4 or five minutes to raise it to 170° F. It came up pretty rapidly. It was then not a thick jelly like mass but was in a heavy syrupy condition. That product was stirred after I brought it to the 170 degrees of heat. The suspension of the starch required stirring and the stirrng was continued just during the observation, perhaps a minute or so. All that was required was to observe whether the condition of the material was fluid or gelatinized and that required moving the material, the stirring was continued long enough to determine how it behaved when it was stirred and then it was stopped.

[p. 391] (Mr. Watson:) Please describe more particularly in application of heat to the water in the matter of

the experiment which you have just testified to. Was the water hot when the starch was put into it or was it heated with the starch in suspension, and if it was how long did it take to bring the water to the temperature of 170 degrees?

(Witness:) It would be practically impossible to get a thorough suspension of starch in water if the starch was dropped into water heated to 170 degrees, because the outside of the small lumps or particles of starch which consist of a great many grains, would be gelatinized on the outside from contact with the hot water. The starch was placed in suspension in the warm water, not however heated to 170 degrees. The precise temperature of the water was not taken but I should say it was about 30 or 35 degrees centigrade (about 95 degrees Fahrenheit) when added to the starch and the starch was thoroughly suspended in it. The method of heating was by means of an exterior jacket of water, the temperature of which was taken simultaneously with the temperature inside of the vessel in which [fol. 526] the mixture was being made. The temperature of the outside water was kept a few degrees above 170 degrees Fahrenheit, while the mixture in the inner vessel was agitated to maintain the suspension. It is my recollection that it took about five to eight minutes, possibly slightly longer, to raise the temperature of the inner liquid to 170 degrees.

[p. 393] Proceedings of November 11, 1921

Cross-examination of William M. Grosvenor continued by Mr. Watson:

I have stated the average viscosities of the Royal grade of cassava according to tests made by us for the years 1911 to 1920 inclusive. These tests were made by what has been called the boil-up test, and which is described in the Perkins patents, particularly referring to the patent in suit. The general method of procedure is described on page 3 line 127 to page 4 line 25, with the difference that instead of making the metarial up at 9 to 1, it is made up in the ration of 20 parts of water to one part of starch. I used 20 parts instead of 9 parts of water as specified in the patent in suit because the test of the patent is intended to be applied specifically

to the treated base which has been treated by the acid process as described in the specific example, and it is not well adapted to the testing of materials which may be extremely high in viscosity. The comparison is not altogether satisfactory and therefore those materials were made up in more dilute solution. If I applied the same test, using the proportions of 20 to 1, on the Perkins base of the patent in suit, that is, the acid treated base, I don't know what the viscosity would be. I have never tested it that way. This test given in the lines mentioned, on pages 3 and 4, was not suitable as I understand it for testing cassava starch [p. 394] as it comes on the market. The test as there given is suitable for testing many of the grades that come on the market today, and we so use it in many cases, not because it is prescribed by Perkins but because it makes a convenient method of comparison. I have applied that test to a number of the starches as they come on the market. I have so testified. It is not, however, applicable to others of the starches, particularly of the older high viscosity starches, or some of the higher viscosity starches as they do come on the market today. Describing briefly the test as I have carried it out and the apparatus used; the apparatus is a [fol. 527] sheet metal vessel generally, about five inches square and about 11 inches deep. The vessel is generally placed inside, set down in, and empty three gallon pail so as to catch whatever may slop over the edges. 150 gram of starch is suspended in 3150 cc. of water in the usual way, that is by first mixing a very small amount of water with the starch and then stirring that wet mass thoroughly together and gradually adding the balance of the water with constant stirring. Immediately after stopping the stirring and before the starch has any opportunity to settle, the vessel is raised up under the steam line, which is provided with a nipple long enough to extend practically to the bottom of the can, and a valve high enough up on the steam line that can be reached without danger of scalding from the hot mixture. The steam line has been thoroughly drained of water, is well jacketed and has been blown out until dry live steam at a hundred pounds pressure can be secured. The steam is turned on as soon as the vessel is raised up, so that the pipe extends to the bottom of the can, and the valve is opened rather wide at first in [p. 395] order to

raise the temperature a- rapidly as possible and give the starch no chance to settle during the warming up period. The rapid current of steam keeps the water agitated until it gets hot enough to gelatinize the starch. The rattle of the steam as it is condensed in the water ceases when the water becomes hot, and ten minutes is taken from the time when this rattle has ceased and the bubbling and boiling liquid begins. At the end of this first period the inflow of steam is cut down so as not to throw out too much of the batch being tested, and this inflow is regulated so that as such steam is blown in for the 10 minutes period as can safely be applied without splashing considerably. At the end of this second period of ten minutes the vessel is lowered, the batch is partially poured off to remove any scum or partially dried material that may be on the surface. A sample of the liquid is taken and tested with the Perkins viscosimeter as described in the patent. In performing the test the steam used was at 100 pounds gauge pressure. I don't remember the temperature of steam at this pressure. It can be found in any of the ordinary tables. I find in Kent's Mechanical Engineer's pocket book, 9th edition, that the temperature corresponding to absolute pressure of 100 pounds for saturated steam is 327.8 F. (Fahrenheit) and that this is confirmed in a set of tables by Marks & Davis Edition of 1919, both of which I hand you. These figures are generally accepted as authentic. That of course applies [fol. 528] [p. 396] to the temperature of the saturated steam in the pipe from which it is drawn and before it is released from pressure by passing the valve. The instant the steam passes through the valve it expands very greatly and consequently its temperature falls to a few degrees above the boiling point of water. The language of the description is the language that is commonly used in describing any such treatment where live steam is blown into a vessel of any liquid; the only reason for giving the pressure of the steam and for specifying that it shall be dry live steam at that pressure is because if the steam is not dry it carries with it a great deal of entrained moisture suspended as little particles of water in the mass of steam, and such particles would tend to dilute the mixture. The pressure is given because when that steam is allowed to blow into the batch and expand, the expansion reduces its tem-

perature, but not quite back to 212 Fahrenheit. The few degrees above 212 remaining in the steam, are dependent on the pressure from which it was released. In other words, not quite all the energy of the steam is used in expansion, some of it remains as a slight super heat of the steam. In this test it is somewhat important whether the dry steam is used at 100 pounds pressure or less, say 50 pounds pressure; because as I say the amount of water condensed will depend—that is, condensed from the steam during its heating operations, while it is heating the batch and while it is maintaining the heat of the batch for ten minutes—will depend on the total amount of energy in the steam. Both steam at a hundred pound pressure and steam at 50 pound pressure, would not keep the starch solution boiling practically to the same extent, not for the [p. 397] purposes involved here. Both would keep it boiling. The point is, as I have explained before, that whatever steam is used for heating up of material and for afterwards boiling the material and keeping it boiling, taking up the losses by radiation and evaporation from the surface of the batch, is obtained by condensing that steam into water in the batch, and at 50 pounds gauge pressure the total heat in the steam is approximately 1178 heat units, whereas at a hundred pounds gauge pressure it is approximately 1188; the difference means an increased amount of condensation, that means a dilution of the starch solution, and that means in turn a false viscosity, an incorrect viscosity.

In the second place, the amount of super heat of 50 pounds steam after expansion, and of hundred pound steam [fol. 529] after expansion, is different, and my experience has been that the batches are at different temperatures after having been so run and given different viscosities. I do not mean to say that the solution if prepared with steam at a hundred pounds pressure, would be above the boiling point, and if prepared with steam at 50 pounds pressure, it would be below the boiling point at the end of 10 minutes; but that the temperature to which the portion of the starch was subjected at the exit of the steam pipe where it came in direct contact with the steam, and all along the surface of the pipe on the way down through the batch, would be substantially different, and that **the main point** is that the results that are actually obtained by trying it,

indicate a substantial difference in the effect. The difference in [p. 398] temperature of super heat of steam expanded from 50 pounds and from 100 pounds, is in my opinion substantial. The ultimate temperature of the batch will probably be very nearly the same but the period during which it has been subjected to that temperature and the degree of heat to which it has been locally subjected at the exit to the steam pipe, will be different. As to the degree of heat at the exit of the steam pipe, when using the dry live steam at 100 pounds pressure. I don't carry the figures in my head. Any engineer can calculate from the steam tables for you what that super heat is. Off hand I should say it was something like 15 or 20 degrees.

Redirect examination by Mr. Crosby:

(Mr. Crosby:) Doctor, in your cross examination you were questioned as to the acid in the Kane base in connection with the acid character of that base and as to the quantity of acid in base; and also with regard to fermentation which might have occurred therein. Even if the quantity of acid found in the base at the present time is small, does that mean that any action of acid or fermentation on the base may have been small?

(Witness:) Not necessarily one way or the other. The degree of acidity or alkalinity of the base as it appears now, does not at all necessarily bear any relation to whether it was subjected to strongly acid conditions, or strongly basic conditions, during its preparation, or at some previous time during its history, it is always possible to neutralize or over neutralize that condition. The Perkins Glue Company generally uses an alkaline treatment and always neutralizes the greater portion of the alkali; it is perfectly possible to more than neutralize that and give the starch an acid reaction, but it is preferred to leave the base in a [fol. 530] slightly alkaline condition and not fully neutralize it, just to prevent the continued degeneration action which traces of acid are in danger of exerting even on air dried starches.

The starch is somewhat more prone to retain alkali than it is to retain acid. The acid is believed not to combine in any way even loosely with the starch, except to be held mechanically in it. The alkali is believed to combine

chemically with the starch and so require considerable washing to remove it.

In my opinion the Kane base was at one time in its preparation more acid than it shows at present and that the more easily removable acid was washed out or partially neutralized during preparation. That degree of acid which I mentioned in my direct examination as being greater than I would expect in a reasonably pure starch, suggested to my mind the result of bacterial action with the possible removal or washing away of some of the acid formed by such action.

To prove whether the starch in the Kane base had been subjected to bacterial action on the one hand and perhaps also subjected to the action of moulds as suggested by its musty odor, I examined it for bacteria and moulds in the usual way; that is, the Kane base was planted in a sterilized culture medium. These plants were given time to develop. By "Plants" I mean "cultures." These cultures were given time to develop or incubated, as it is called, and then I observed under the microscope the colonies of bacteria and the mould centers developed about the starch granules. As to the distinction between moulds and bacteria; bacteria is believed to be an animal parasite; the mould is believed to be a vegetable parasite. In some cases some varieties approach so closely together that it is sometimes difficult to draw a sharp line of distinction, but the moulds are apt to appear as radical fibrous developments around a center, with long ramifying arms; they grow like plants you might say, and it is those ramifying arms which give the moulds the whiskery appearance that we are all familiar with when anything gets mouldy. The moulds are believed to propagate [p. 403] by spores or seeds, and the bacteria are believed in many cases to propagate by fission, that is, separating or breaking up or by their development one from the other. I did find in the sample of the Kane base which I obtained from the Holland Furniture Company, bacterial and mould growth. In my opinion it would have been possible for the acid condition of the Kane base to have been [fol. 531] produced by action of such bacteria on the Kane base at some stage in its preparation.

Recross-examination by Mr. Watson:

(Mr. Watson:) It is a fact, is it not, that the presence of bacteria is almost universal in air and water, and on our bodies, on our tongues, and hands, and that all substances not kept under sterilization are subject to the action of bacteria?

(Witness:) More or less to a greater or less degree, if the surfaces are not protected in some way or have not been cleaned.

(Mr. Crosby:) Is there anything that leads you to believe that the bacteria which you found in the Kane base, was not bacteria which the Kane base took up from the surrounding medium since its preparation, for example?

(Witness:) Yes, the general location of the bacteria, and their habit, as it might be called, led me to believe that the bacteria were of character in the first place, and were distributed in a manner in the second place that strongly indicated their having been so distributed [p. 404] during the time of the preparation of the starch. In the first place the character of bacteria and mould is almost as different as those of individuals. They have a preferred temperature of growth and preferred materials on which to act. The bacteria in this case thrived very much more actively at high temperatures, what might be called tropical temperatures, and that suggests at least that they were of a habit that would indicate their origin as tropical. In the second place, when given that preferred temperature, they acted much more rapidly on a starch granule apparently than on anything else in the culture medium, and that to my mind indicated that they were bacteria developed in the decomposition of the starch itself.

On the other hand, their distribution was such that apparently almost every starch ganule was more or less inoculated, and that would hardly be possible by accidental getting of bacteria into the starch during its shipment or handling here. In taking the samples for treatment care was used to take the samples from the interior of the batch of starch and not from the surface. As to where did you obtain this particular sample of Kane base which I examined for bacteria: it was a portion of the sample obtained from the Holland Furniture Company at the time

of my inspection of operations there. That sample was removed from a bag, which as I recollect it was unopened, when I started to take the sample; and in any case it was removed from beneath the surface of the bag.

[fol. 532] The sample when taken was closed up in a large tight paper bag and there was approximately 15 or 20 pounds of starch in the bag on return to the laboratory. The greater portion of that sample was removed directly from the bag to a tight tin can and kept in that can except for such portions as it might be necessary to remove for examination. The portion we took for examination in this case was removed from [p. 405] the body of the material after taking off the top portion of material in the can, just to avoid possible colonization of the surface which might easily have occurred. The paper bag in which I first placed the sample of starch was not sterilized or kept under sterilized condition and neither was the tin can sterilized. It is very possible that the surfaces of the material, or portions of the material which had been in contact with any of those surfaces, might have become contaminated. It is however scarcely possible, in my opinion, that four separate samples taken from different portions of the material, should have all been contaminated in about the same way, if that contamination had arisen in any such accidental manner as contact with the surface of the bag or the inside of the can. The burlap sacks in which starch is usually imported into this country are probably infected with bacteria, the bacteria could easily penetrate through the meshes of the burlap in any case, but bacteria cannot readily penetrate through a close mass, such as mass of the starch itself within the bag, and just such close wads of cotton or something of that kind which filters the air, removes bacteria, are customarily used in protecting culture tubes to avoid the access of bacteria. I have examined some other raw starches for bacteria. I never found any samples taken from such starch as it comes on the market, to be wholly free from bacteria. I have found very great variations in the degree of contamination. I may say that these examinations were not made at a time when what I could call high grade starches were generally available. I [p. 406] have under way now the examination of starches prepared by me under conditions which I think will show extremely little, if any, coloni-

zation, but that is only based on the rate at which they ferment in the ordinary process of treatment. That, however, is an extremely good indication of the degree of colonization, and as I have testified before starches that we receive today are extremely prone to fermentation in the treatment tanks; whereas starches that we prepare ourselves or that we received years ago, could be left in the [fol. 533] tanks for many hours without any evidence of fermentation; so that I have every reason to believe not only from a few bacterial tests but from experience with the starches as they come on the market, that a considerable proportion of the starches that we receive today are contaminated in a degree beyond comparison greater than the starches that we received five or ten years ago.

[p. 412] A. N. Grossman, a witness on behalf of defendant, being re-called, testified as follows (Nov. 11, 1921):

Examination by Mr. Watson:

I am the same A. N. Grossman who has previously testified for defendant in this case. (Mr. Watson) In the plaintiff's patent in suit, page 4, beginning at line 74, it is stated:

"Also, in actual practice, I have found that good glue is produced by treating the base with chemicals, to reduce the water absorbing power to a point where the base if mixed with from two to three parts of water and subjected to a heat of 170 degrees, F, would result in a syrupy condition instead of a thick jelly like mass. I find that by such suitable treatment under my process it is possible to produce from the base long filaments having a strength similar to threads of animal glue."

Please take a sample of the glue base from the jar in evidence in this case marked "sample of Kane glue base, sealed bag, originally from Holland Furniture Co. submitted by Kane Manufacturing Co., A. N. Grossman, Sept. 27, 1921" and submit it to the test described in the portion of the patent specification which I have quoted, stating on the record in detail everything that you do in this connection, step by step, and the result you obtain?

[p. 413] Defendant's counsel instructs the witness to take four ounces of the glue base from the jar as a sample for this test, and to mix the same with two and one half parts of water this being the average of the two to three parts of water mentioned in the patent.

The Master: The hearing will now be adjourned forthwith to the building of the Grand Rapids Gas Light Company in this City, for the purpose of conducting the test referred to, and from there we will return here.

[fol. 534] (The following proceedings were had at the place of adjournment:)

(The witness, Mr. Grossman:) I opened the bottle marked sample of Kane glue base, from sealed bag, originally from Holland Furniture Company, submitted by Kane Manufacturing Co. signed A. N. Grossman, marked "Sept. 27, 1921."

I took from this a four ounce sample, carefully weighed same, then closed up the receptacle with its cover. I have before me a double boiler of agate wear and in the larger boiler I have placed as much water as possible, taken from the tap in the basement of the Gas Company building, to allow the inner boiler to be sufficiently submerged into it, that when the water in the larger boiler is heated it [p. 414] will surround the inner boiler. I have placed in the inner boiler 10 ounces of tap water drawn from a tap in the basement of the Gas Company building, and measured with a measuring glass borrowed from Peck Brothers, drug store located on the corner of Division and Monroe Streets, in the presence of the Master.

This is ordinary City water of Grand Rapids. I now place my thermometer in the outer kettle, letting it rest in the water, and take its reading. The temperature is 65 degrees Fahrenheit.

I now place my thermometer in the inner boiler and allow it to remain there to adjust itself to the proper temperature, and find the temperature to be 62 and one half degrees.

I place a small wooden paddle in the inner boiler containing the 10 ounces of water which were carefully measured out with the small glass graduate which had a capacity of four ounces, making three distinct measurements, two of them being for the four ounces each and one for two ounces.

I will now pour the four ounce sample of the Kane base into the inner boiler which contains the 10 ounces of water.

During the process of adding the starch to the water, I agitate the same to allow it to form a milk. Portions of the four ounce sample are added with constant stirring at intervals until the entire four ounces have been mixed with the 10 ounces of water, to form the milk. I have dipped my finger into the starch milk and rubbed a small amount of the solution on the paddle to remove any dry particles which may have been clinging thereto.

I have wiped into the milk all the available dry starch and then place the inner boiler into the water jacket. I will [fol. 535] continue stirring the same to keep same in suspension, I will turn on the gas. I continue the stirring of the starch milk, my watch being 2:52. I now place the double kettle on the gas plate, continue stirring. I also place within the starch milk my thermometer. During the entire test I will continue agitation constantly.

The sample of starch milk is now being heated and the temperature is rising. As the water in the outer pot is being heated it is transferring its heat to the inner boiler. The temperature of the starch mixture is now 80 degrees Fahrenheit at 2:56. The temperature of the inner vessel? The temperature of the starch mixture is now 100 degrees at 2:57. The temperature of the starch mixture is now 120 degrees at 2:58 and one half. The temperature of the starch mixture is now 130 degrees F. at 2:59.

It will be noted that at no time is the operator allowing the thermometer bulb to rest on the bottom of the pot wherein is the starch solution; it is being held in the starch solution. The temperature of the starch solution is now 140 degrees at 3 o'clock.

It will be noted that the starch is now beginning to thicken, it is forming a heavy milk. The stirring is continued as rapidly as is possible. The temperature of the thick mass is now 150 degrees at 3:02. Oh, Good Night, I busted the thermometer. I will have to shut this off and get another sample.

I have weighed another sample of the same product as mentioned above, taken from the same jar exhibit as described above, in the presence of the Master and counsel for the respective parties. I have placed running water from

the tap as used in Grand Rapid- in the outer boiler, the temperature of which is 48 degrees.

I have now placed thermometer in the inner boiler containing the 10 ounces of water which were measured out in the presence of Dr. Grosvenor, which water was taken [p. 416] from the tap in the basement of the Grand Rapids Gas Company building and measured with the graduate which was borrowed from Peck Bros. drug store, and which was delivered to me in the presence of the Master. The temperature of the water in the inner boiler is 52 degrees. I will now stir into the inner boiler exactly as before, the four ounce sample of the Kane glue base, which has been described above as taken from the exhibit jar. The four ounces of starch base are thoroughly and intimately mixed with 10 ounces of water to form a starch milk. I have now dipped my finger in the starch milk and wiped off the paddle [fol. 536] so that no dry particles will adhere thereto. I now place the inner boiler into the boiler which is full of water, so that the inner boiler is submerged into the water of the outer boiler. I have lighted the gas and placed the boilers on the gas plate at 3:24. I will continue stirring. As the temperature in the outer boiler is raised by the heat of the gas, the starch milk in the inner boiler receives the heat by transfer.

It is now 3:29 and the temperature is raised to 100 degrees Fahrenheit. It is now 3:31 and the temperature of the starch solution is 120 degrees F. In taking the readings with the thermometer it will be noted that at no time is the bulb of thermometer touching the bottom of the inner boiler, it is held in the starch solution. The temperature of the starch solution is now 130 F. at 3:32. The temperature of the starch solution is now rising, and it will be noted that it is beginning to thicken. The temperature is now 140 degrees at 3:38. It is now thickened into a paste and it is being constantly agitated while the heat is being raised. It will be noted that the mass is very heavy and pasty, it is beginning to gelatinize and change from the white to the glass color period. The [p. 317] temperature is now 150 degrees F. at 3:35. The mass is losing almost entirely its milkish color and is becoming glassy in appearance. The temperature is now 162 at 3:38; now 164; now 166; now 168. It is now 170 and I will shut off the gas at 3:37. I

will now stir the starch solution. Mr. Master, I want you to look at this. I now consider the test as complete. Do you want to ask me any questions?

Mr. Watson: You were asked to state the result. Will you describe what you have there?

(Witness:) I have here a thick jelly like mass, rubbery in appearance and livery-like liver.

Mr. Crosby: I would like to note that at the time that statement was made it was some little time after the material was taken from the stove and some little time after the batch reached the temperature of 170 degrees.

The Witness: I want to put on the record that my conclusion was drawn just as I took it out from the double jacketed boiler when the temperature had reached 170 degrees Fahrenheit. At the time I showed it to the Master; and is not based upon my conclusions after the sample has [fol. 537] has been allowed to stand. It is now 3:39 and the mass is becoming more rubbery and unworkable and heavy jelly. It would not in any way be considered syrupy.

[p. 418] Hearing resumed at the office of the Master.

William M. Grosvenor, recalled.

Examination by Mr. Crosby:

I have been present during the making of the test by Mr. Grossman which he has just testified about above. I have some comments to make as to whether the material subjected to the test fell within the test. In my opinion the test was not properly carried out, in the following respects: As indicated in the testimony this morning, in order to get a smooth mixture of starch it is desirable to mix the starch first with a small quantity of water and stir that thoroughly to wet out the starch and break up the small granules before adding a large quantity of water. If the starch is poured into the water the granules are wet from the outside it takes a long time to get a smooth even mixture.

In the second place, so far as I could judge by the sound of the kettle during the test, the water began boiling in the outside kettle while the material was still at the tested

temperature of 140 degrees as testified by Mr. Grossman. This would mean that a portion of the material in contact with the wall of the kettle was subjected to a relatively very much higher temperature.

[p. 419] That is consistent with constant stirring. The stirring was of a character that did not at all times keep the wall scraped entirely clear from material, and even if that is done, as I indicated in my testimony, with regard to this test, the outside water should be kept at a temperature a few degrees above the desired temperature, in order not to subject the starch when it comes in contact with the walls of the kettle, to a higher temperature. There may be some uncertainty as to the temperature of 140, but when the temperature of 150 was taken in the mass, the kettle actually boiled over and water ran over the outside, and from that point on for about four minutes its material was in contact with the walls of the kettle, was subjected to a temperature very close to the boiling point of water, instead of to a temperature of 170 degrees.

[fol. 538] Another *joint* that I want to raise with regard to the test is that in testing small quantities of material, it is generally necessary to observe special precautions to offset the effects on very small batches. In an open kettle of that kind, working a small batch, portions of it are constantly in contact with the cold air and evaporation is taking place from that surface; the amount of water removed is small but the chilling action is rather important. It was clearly obvious from the advance mass, after the flame was turned out, that it very rapidly became thicker, and that happens intermittently during the process of stirring in an open vessel of that kind and bringing to the surface the material and exposing it to both evaporation and a chilling action of the air. If that kind of operation is to be carried out without such precautions as I shall describe in a moment, the mass involved must be so large and the stirring of such a character, that the material is not frequently exposed to the chilling [p. 420] action of the cold air. It ought to be carried out in a vessel which is of exceedingly good conducting quality, preferably not enameled on both sides, and it ought to be carried out in a closed vessel in which the condition of the material can be ob-

served without exposing it to the action of the cold air, if one is to use small amounts of material. If the vessel is closed you can stir with a little agitator. Commenting on the results of the test however, I wish to point out the passages in the patent that have [p. 423] been referred to in asking the test be made—in the first place, the interpretation of from two to three parts of water in such instructions for tests, would to my mind mean that the material was suitable, if such a result were obtainable with any proportion between two and three inclusive, and if the material were too thick at two or two and a half, I wouldn't be disposed to condemn it until I had tried three. The question whether a syrupy condition was produced may be partly answered by reference to the patent as well as by observation. The words "syrupy condition" [p. 424] do not mean a syrup, but a condition which resembles in some respects a syrup. If we seek the respect in which that resembles a syrup, we find prior to the statement of this test and after the description of the full process on page 3 line 30—60 of the patent in suit, among the general statements for guidance: "As previously stated when ordinary starch is heated with water it absorbed enormous quantities of water, and if only two or three parts of water are used becomes a stiff jelly in form, which must be very much [fol. 539] diluted before it will be practically workable." As to whether that is starch or flour in the jar, I think unless some issue turned around it actually, unless there was some reason for drawing the special distinctions, starch and flour would in this case be used interchangebly. (Continuing.)

"I find, however, that using my improved glue base and method of mixing the same, this water absorbing power can be greatly reduced and can be regulated, although the mixing is done with the same proportions of alkali and carbohydrate, or else the same temperature, which have hitherto produced unworkable jellies or weakly adhesive pastes or mucilages." So that in my opinion the passage on page 4, line 80, which states "would result in a syrupy condition instead of a thick jelly like mass" means a mass which is a mass but does show the properties of a syrup and is not unworkable. The mass which was produced in the test this afternoon made by Mr. [p. 425] Grossman was dis-

tinctly workable in spite of the adverse conditions under which it was made at the time when the temperature reached 170 degrees, even taken in the mass, although a portion of the mass had unquestionably been heated to a very much higher temperature and a portion of it had been repeatedly heated and chilled.

The Master: In other words, you place stress on the fact that it was examined sometime after it had been removed from the vessel?

A. That in part, and I place stress on the fact that in describing it Mr. Grossman did not dwell on the distinction between a syrup and a mass which was more or less syrupy—exhibited more or less the properties of a syrup.

The Master: I will ask the witness, if you please. From what facts which were made apparent at the test do you deduce the syrupy condition?

A. From the fact that at the time Mr. Grossman testified that the material had reached 170 degrees, he was able to stir the mass and the paddle move through the mass instead of the mass picking up and moving around as a whole like a stiff unworkable jelly; and the fact that the mass after the paddle had passed through it flowed back more or less into position on the bottom of the kettle, as would result in the stirring of any material coming in behind the paddle, and that these facts were apparent in spite of the fact as [fol. 540] previously stated that the test was not made under proper conditions but under conditions which were adverse to the production of the syrupy mass or mass having to some extent the properties of a syrup.

The Master: As I understand you then the paddle went through the mixture and did not shove it around at the last stage?

A. It did not, and did not tear the mixture apart and leave an opening behind it, as it would in the case of a stiff unworkable jelly.

[p. 426] Examination by Mr. Watson:

As to whether there is any condition of the test stated in lines 74 to 85, page 4 of the patent in suit, which the witness Grossman did not comply with in making the test;—in the first place, the base was not thoroughly mixed with

the water. I described the action which results if you pour starch into water and the reasons for it. There is nothing in this statement which speaks of the manner of mixing, but it says "mixed." It is perfectly well recognized in the starch art and has been for a great many years, if you want to make a mixture of starch and water, that is the most satisfactory way of making it, desirable way to make it. In the second place, the witness did not attempt to determine whether he would have obtained a syrupy mass with any proportion of water between two and three inclusive. In the third place, it was not subjected to a heat of 170 degrees, but to a temperature closely approaching if not quite reaching the boiling temperature at certain places over a considerable period. Finally, I don't know how much water it was treated with because I don't know how much evaporated during the heating and agitation, and I don't see any part of the description which instructs one to alternately heat and chill the material. [p. 427] There are at least three things with which the witness did not comply. In the first place, if somebody tells me to mix something, I understand that he means to mix it and not to partially mix it, before treatment. When I examined the milk so-called as thrown up on the sides of the kettle, it was granular in structure and not a clear even milk. It was not mixed. In the second place; from two to three parts: I do not understand that to be limited to two and a half parts and when it says subjected to a heat of 170 degrees Fahren- [fol. 541] heit I do not understand to mean 210 or 212 boiling point.

The Master: There too I am not satisfied. We watched the test and the witness continuously stirred it, so that every particle was only subjected to the extra heat of the wall of the chamber an infinitesimal part of a moment, it passed on, and there would therefore be a uniform heat in my judgment, of course subject to correction, rather an exceptional heat at one point of the mixture and a lower degree of heat at the other, in view of the constant agitation.

(Witness:) Constant agitation of a heavy mixture of that kind does not have the same effect as constant agitation of a fluid easily agitable liquid in which eddy currents occur, where the scraping or agitating element does not repeatedly [p. 428] and rapidly remove the material from

the wall; a thick heavy material lies coated against the wall and at the bottom where the agitation is not of a character to scrape the bottom but merely goes around like the end of a stick, it leaves large proportions of the lower mixture in contact with the bottom, not merely during one passage of the paddle but until by chance the paddle happens to come back and pass over the same spot again. That may be several minutes; and it was clearly observable during that stirring that there was along the walls a far more transparent mass then the portion in the center which was not in contact with those over heated walls.

A. N. GROSSMAN recalled:

Examination by Mr. Watson:

I have seen glue base mixed with water in the actual manufacture of glue. I have seen Perkins glue base mixed with water. I have seen the operation of making Perkins glue by mixing the Perkins glue base with water and alkali any number of times in my experience in the glue business, ever since 1915. I saw Perkins vegetable glue in the plant of the Herrick Manufacturing Company of Falconer, New York, [p. 429] on the outskirts of Jamestown, New York, and also in the plant of the Merriman Furniture Corporation of Jamestown, New York. The Herrick Manufacturing [fol. 542] Company had and may have today, this was an experience of several months ago, a Perkins glue spreader and Perkins glue mixer. I watched the foreman, Mr. Benson, measure out his water into a clean Perkins converter, weigh out dry Perkins glue base in a proportion of two and one eighth parts of water for each pound of the Perkins glue base. The agitators were put in motion and the Perkins glue base was poured into the Perkins converter; the agitation threw the particles of starch and held them in suspension in the converter, with the exception of a small amount which settled down to the bottom of the conical end of the converter, because there was no agitation at the lower end. All the starch was thrown in with all the water at one time, and allowed to be intimately mixed for about 10 minutes before they turned on the steam in the other jacket to cook it up.

I also saw this step in the plant of the Merriman Furniture Corporation. As a matter of fact I saw this in a plant of the Merriman Furniture Corporation not once but at least five or six times, during my visit there. In the Merriman plant the man who takes charge of the cooking of the glue, always has a stick which he puts into the converter and runs water into the converter from a tap, up to a certain level as indicated by that stick. The water is shut off, the agitators started in motion, and the weighed amount of Perkins glue base is thrown into the water and mixed. At no time have I ever seen nor is it the practice in any of the other plants which I have visited in the number of years I have been in the glue business, have I ever seen where they take starch in a small amount of water first and then add the total, later, to make up the total amount of [p. 430] water for the manufacture of vegetable glue. This Perkins glue base is in the form of a dry powder substantially as we have been discussing starch bases. I may give a specific example: In this plant where they had 50 pounds of glue base left in a bag, they put a small hook into a corner of the bag, tipped the bag upside down and let the mouth of the bag rest just inside of the glue converter so that all the starch drops right in. It is the customary way, not only with Perkins glue but also with the Kane base and with any other Kane base that I have seen—any other glue base which I have seen. To mix the flour or glue base with the small portion of water thoroughly and then add the additional water, the Furniture Companies could not afford to waste that much time in the manipulation of *its* glue.

[fol. 543] Examination by Mr. Crosby:

[p. 432] As to how big batches were these that you have just testified about, that is how many pounds of glue base were used; in making up these batches in the Merriman plant it is a 27 gallon kettle. As to how many pounds of dry glue base were used, it will vary. I was there on a Saturday morning I remember and they only worked a half a day, so they made a small batch. I beg your pardon, Herrick being a small plant, only uses small quantities of glue and they don't make up large batches of a full converter. This particular batch was about 20 pounds. The Merriman batches I believe—I know, to be 50 pounds.

Exhibits Offered in the Accounting

Defendant's First Statement Filed with the Master

Statement

On behalf of Holland Furniture Company as ordered by John S. Lawrence as Master under Interlocutory Decree, said Statement being dated the 9th day of September, 1921.

The following is a complete statement of the vegetable glue base and all lists thereof (not obtained from the Plaintiff) which the defendant, Holland Furniture Company, has used since January 1, 1913 to make vegetable glue.

[fol. 544] Vegetable Glue—Purchased from a Solva Waterproof Glue Co.

Date invoice	Quantity	Price	Net
12/ 5/1916	100 lbs.	06½	6 50
1/23/1917	1003	06½	65 20
1/24	683	06½	44 40
1/24	4123	06½	268 00
2/26	3000		
Less..	2181		
Net	819	06½	53 24

Vegetable Glue—Purchased from Kane Mfg. Co. of Chicago

Date invoice	Quantity	Price	Net
10/17/1917	3021	08½	256 79
7/ 9/1918	2040	13	265 20
10/ 2	2030	13	263 90
12/28	2030	13	263 90
1/ 3/1919..	1030	13	132 60
2/ 3	6120	12	734 40
3/10	6120	11½	703 80
7/14	15225	11½	1750 88
10/27	8932	09½	848 54
11/77	1218	09½	115 71
2/18/1920..	10155	8-¾	888 13

Date invoice	Quantity	Price	Net
4/17	20300	8–¾	1776 25
7/28	20300	8–¾	1776 25
1/ 4/1921	406	07	28 42
2/12	20300	07	1421 00

Vegetable Glue—Purchased from International Process Company, Indianapolis, Ind.

Date invoice	Quantity	Price	Net
9/ 3/1919	2000 lbs.	09½	190 00
11/ 7	1000	09½	95 00
1/10/1920	5000	09½	475 00

Neither the defendant Company nor any of its officers, agents or employees is able to give a statement of the number of square feet of spread obtained with the vegetable glue, the lots of which are listed above in compliance with [fol. 545] paragraph 1 of the above order, or a statement of the number of feet spread each month or other period, or the amount of vegetable glue used during any period, except insofar as it may be indicated by the purchases listed above, for the reason that defendant is not engaged in the manufacture or sale of veneer for or to others, but the veneer made in its factory is incorporated in furniture made in the factory, and is made as demand therefor arises in the manufacture of furniture in its factory and no record whatever is kept of the amount or character of veneer made.

Plaintiff's Exhibit 1 of Sept. 22, 1921

Animal Glue—Purchased from United States Glue Co. of Milwaukee, Wis.

Date invoice	Quantity	Price	Net
5/17/1916	2804 lbs.	14½	406 58
6/ 8	1961	14½	284 35
6/28	1964	14½	284 78
7/15	831	14½	120 50
7/30	1527	14½	221 42
8/ 2	1504	15½	233 12
8/14	1981	15½	431 52
9/ 9	1624	15½	251 72

Date Invoice	Quantity	Price	Net
9/16	841	15½	133 36
10/13	1982	15½	307 21
11/ 9	988	15½	153 14
12/23	1240	22½	279 00
2/12/1917	1072	25	268 00
5/12 & 24	799	33	263 67
5/28 & 6 5	1220	33	402 60
6/ 9	1217	33	401 61
8/24	1599	33	527 67
10/11	1169	33	385 77
11 21	1190	33	392 70
2/ 9/1918	1179	33	389 07
6/ 6	397	28	111 16
6/12	794	28	222 32
8/16	777	28	217 56
8/29	773	28	216 44
9/12	777	28	217 56
2/16/1920	787	22	173 14
2/ 8/1921	636	24	152 64
3/30	708	24	169 92
5/12	581	23	133 63
6/20	1162	23	267 26

[fol. 546] Vegetable Glue—Purchased from International Process Co., Indianapolis, Indiana

Date Invoice	Quantity	Price	Net
9/ 3/1919	2000 lbs.	09½	190 00
11/ 7	1000	09½	95 00
1/10/1920	5000	09½	475 00

Vegetable Glue—Purchased Solva Waterproof

Date Invoice	Quantity	Price	Net
12/ 5/1916	100 lbs.	06½	6 50
1/23/1917	1003	06½	65 20
1/24	683	06½	44 40
1/24	4123	06½	268 00
2/26	3000	.....	.....
Less	2181	.....	.....
Net	819	06½	53 24

[p. 437] Animal Glue—Purchased from the Keystone Glue Co. of Williamsport, Pa.

Date invoice	Quantity	Price	Net
5/15/1918	447 lbs.	27	120 69
5/24	452	27	122 04
9/16	883	27	238 41
11/15	802	27	216 54
12/16	813	27	219 51
5/12/1919	850	25	212 50
6/10	834	25	208 50
7/ 1	873	25	218 25
9/13	1659	25	414 75
11/ 3	646	25	161 50
12/ 1	631	25	157 75
12/31	2918	25	729 50
5/24/1920	2573	30	771 90

[fol. 547] Vegetable Glue—Purchased from Kane Mfg. Co. of Chicago

Date invoice	Quantity	Price	Net
10/17/1917	3021	08½	256 79
7/ 9/1918	2040	13	265 20
10/ 2	2030	13	263 90
12/28	2030	13	263 90
1/ 3/1919	1030	13	132 60
1/23	420	08	34 24
2/ 3	6120	12	734 40
3/10	6120	11½	703 80
7/14	15225	11½	1750 88
10/27	8932	09½	848 54
11/17	1218	09½	115 71
2/18/1920	10155	8–¾	888 13
4/17	20300	8–¾	1776 25
7/28	20300	8–¾	1776 25
1/ 4/1921	406	07	28 42
24-12	20300	07	1421 00

Animal Glue—Purchased from Swift & Company, Chicago

Date invoice	Quantity	Price	Net.
12/15/1917	491 lbs.	30	147 30
2/15/1918	1557	30	467 10

[fol. 548] STIPULATION RE INTRODUCTION OF EVIDENCE FROM HOOD ET AL. CASE

[p. 438] Whereas in the cases of Perkins Glue Company, Plaintiff, versus Fred E. Hood, et al., Defendants, Equity 1898, and Perkins Glue Company, Plaintiff, versus West Michigan Furniture Company, et al., defendants, Equity 1899, heard together in the District Court of the United States for the Western District of Michigan, Southern Division, certain testimony and evidence was adduced before the Master *with* counsel herein for one party or the other believe to be material and relevant to the case, and it is desired to avoid the time and expense of retaking said testimony and evidence in this case;

Now, therefore, it is hereby stipulated and agreed by and between counsel for the respective parties hereto that copies of any or all of the following items of testimony and evidence taken in said cases 1898 and 1899, before the Master, may be offered in evidence in this case by either party and with the consent of the Master received in evidence herein with the same force and effect as if the original had been duly taken in this case in the usual manner, subject to correction upon comparison with the original records, and subject to any objections the adverse party may desire to make as to the materiality or relevancy or otherwise except to the manner of taking same and introducing same herein; provided however that if any of the testimony or evidence of any item is introduced herein by either party all of the evidence listed below in such item shall be introduced by such party and such testimony and evidence of plaintiff in said cases 1898 and 1899 as is introduced herein shall be received and considered as if taken by plaintiff herein and such testimony and evidence of defendants in said cases 1898 and 1899 as is introduced herein shall be received and considered as if taken by defendants herein: Item 1 Testimony of E. W. Steward, Item 2 Testimony of S. D. Taylor (Prima Facie), Item 3 Testimony of J. H. Veneklassen, Item 4 Testimony of R. C. Wendt, Item 5 Testimony of F. M. Knappen, Item 6 Testimony of C. B. Allen, Item 7 Testimony of S. D. Taylor as defendant's witness, Item 8 Testimony of S. D. Taylor in rebuttal, Item 9 Testimony of W. M. Grosvenor, Item 10 Plaintiff's Ex. 3 of Jan. 10, 1921, Item 11 Plaintiff's Ex. Oil Paint and

Drug Reporter, Prices current on Animal Glue, Jan. 2, 1911, to Nov. 1, 1920, Item 12 Plaintiff's Ex. 3 of Jan. 12, [fol. 549] 1921. It is further stipulated and agreed by and between counsel for the respective parties for the purposes of this case that the copy of the Oil Paint and Drug Reporter Prices Current of Animal Glue referred to above may be received in evidence herein as a correct copy of said prices as given in said Oil Paint and Drug Reporter at the times referred to therein, and that the attached schedule of Oil Paint and Drug Reporter Prices current of Animal glue from November 1, 1920, to September 19, 1921, is a correct copy of the prices current of Animal glues as given in said Oil Paint and Drug Reporter at the times referred to, and said attached schedule may be received in evidence herein with the same force and effect as the original Oil Paint and Drug Reporters duly proved, subject, however, to any objections and opposing party may desire to make as to materiality or relevancy or otherwise except as to the manner of proving same.

PLAINTIFF'S EXHIBIT

Oil Paint and Drug Reports

Prices Current of Animal Glue (Cents per Pound)

Nov. 1, 1920, to Sept. 19, 1921

	Nov. 1, 1920	Nov. 8, 1920	Nov. 15, 1920
Extra White	35—45	35—45	35—45
Medium White	29—34	29—34	29—34
Cabinet	25—36	25—36	25—36
low grade	21—25	21—25	21—25
Foot Stock	19—22	19—22	19—22
brown	19—22	19—22	19—22
Common bone	18—21	18—21	18—21

	Dec. 6, 1920	Dec. 13, 1920	Dec. 20, 1920
Extra White	35—45	35—45	35—45
Medium White	29—34	29—34	29—34
Cabinet	25—35	25—36	25—36
low grade	21—25	21—25	21—25
Foot Stock	18—21	18—21	18—21
Brown	19—22	19—22	19—22
Common Bone	19—20	19—20	19—20

[fol. 550]

	Dec. 27, 1920	Jan. 3, 1921	Jan. 10, 1921
Extra White	35—45	35—45	35—45
Medium White	29—34	29—34	29—34
Cabinet	25—36	25—36	25—36
low grade	21—25	21—25	21—25
Foot Stock	18—21	18—21	18—21
Brown	19—22	19—22	19—22
Common bone	19—20	17—19	17—19

	Jan. 17, 1921	Jan. 24, 1921	Jan. 31, 1921
Extra White	35—45	35—45	
Medium White	28—33	29—34	
Cabinet		25—36	24—35
Low grade	20—24	21—25	20—22
Foot Stock	18—21	18—21	18—20
Brown	18—22	18—22	18—22
Common bone	16—18	17—19	16—18

	Feb. 7, 1921	Feb. 14, 1921	Feb. 21, 1921
Extra White			
Medium White			
Cabinet	24—35	24—35	24—35
low grade	20—22	20—22	20—22
Foot Stock	18—20	18—20	18—20
brown	18—22	18—22	18—22
Common bone	16—18	16—18	16—18

	Feb. 28, 1921	Mar. 7, 1921	Mar. 14, 1921
Extra White			
Medium White			
Cabinet	24—35	20—35	20—35
low grade	20—22	20—22	20—22
Foot Stock	18—20	16—20	
brown	18—22	16—22	
Common bone	16—18	14—20	14—20

	Mar. 21, 1921	Mar. 28, 1921	April 4, 1921
[p. 442] Extra White			
Medium White			
Cabinet	20—35	20—35	20—35
low grade	17—19	17—19	20—22
Foot Stock			
brown			
Common bone	13—19	13—19	14—20

	April 11, 1921	April 18, 1921	April 25, 1921
[fol. 551] Extra White	.....	.....	30—40
Medium White	.....	.....	25—30
Cabinet	20—35	20—35	20—35
low grade	20—22	20—22	17—19
Foot Stock	.....	.....	.....
brown	.....	.....	.....
Common bone	14—20	14—20	13—19

	May 2, 1921	May 16, 1921	May 23, 1921
Extra White	30—40	30—40	30—40
Medium White	25—30	25—30	25—30
Cabinet	20—35	20—25	20—25
low grade	17—19	17—19	17—19
Foot Stock	.....	.....	.....
brown	.....	.....	.....
Common bone	13—19	13—19	13—19

	May 30, 1921	June 6, 1921	June 13, 1921
Extra White	30—40	30—40	30—40
Medium White	24—30	24—30	24—30
Cabinet	20—35	20—35	20—35
low grade	17—19	17—19	17—19
Foot Stock	.....	.....	.....
brown	.....	.....	.....
Common bone	11—18	11—18	11—18

	June 20, 1921	June 27, 1921	July 4, 1921
Extra White	30—40	30—40	30—40
Medium White	24—30	24—30	24—30
Cabinet	20—35	20—35	20—35
low grade	17—19	17—19	17—19
Foot Stock	.....	.....	.....
brown	.....	.....	.....
Common bone	11—18	11—18	11—18

	July 11, 1921	July 18, 1921	July 25, 1921
Extra White	30—40	30—40	30—40
Medium White	24—30	24—30	24—30
Cabinet	20—35	20—35	20—35
low grade	17—19	16—18	16—18
Foot Stock	.....	.....	.....
brown	.....	.....	.....
Common bone	11—18	10—16	10—16

[fol. 552] [p. 443] Extra

	Aug. 1, 1921	Aug. 8, 1921	Aug. 15, 1921
White	30—40	30—40	30—40
Medium White	24—30	24—30	24—30
Cabinet	20—35	20—35	20—35
low grade	16—18	16—18	16—18
Foot Stock			
brown			
Common bone	10—16	10—16	10—16

	Aug. 22, 1921	Aug. 29, 1921	Sept. 5, 1921
Extra White	30—40	30—40	30—40
Medium White	24—30	24—30	24—30
Cabinet	20—35	20—35	20—35
low grade	16—18	16—18	16—18
Foot Stock			
brown			
Common bone	10—16	10—16	10—16

	Sept. 12, 1921	Sept. 19, 1921
Extra White	30—40	30—40
Medium White	24—30	22—28
Cabinet	20—35	18—32
low grade	16—18	15—18
Foot Stock		
brown		
Common bone	10—16	9—14

[fol. 553] Plaintiff's Exhibit 3 of Jan. 10, 1921; also Pltf's Exhibit 2 of Jan. 12, 1921

	1½	1¼	1½	1¼
January 1915	10¼		12	13
Feb.	10¼		12	13
Mar.	10¼		12	13
April	10¼		12	13
May	10¼		12	13
June	10¼		12	13
July	10¼		12	13
Aug.	10¼		12	13
Sept.	10¼		12	13
Oct.	10¼		12	13
Nov.	10¼		12	13

	1⅛	1¼	1¾	1½
Dec.	10¼		12	13
January 1916	10¼		12	13
Feb.	10¼		12	13
Mar.	10½		13	14
April	11½		14½	15½
May	13½		14½	15½
June	13½		14½	15½
July	13½		14½	15½
Aug.	14½		15½	16½
Sept.	14½		15½	16½
Oct.	15		16	17
Nov.	16		17	18
Dec.	19		22	25

Plaintiff's Exhibit 3 of Jan. 12, 1921; also Def't's Exhibit 1 of Jan. 12, 1921

	1¼	1½	1¾	1½
January 4/1917	20¢	22¢	25¢	27¢
March 8/1917	23¢	25¢	28¢	30¢
March 25/1918	21¢	24¢	26¢	28¢
April 15/1918	22¢	24¢	26¢	29¢
January 1/1919	20¢	22¢	23½¢	27¢
May 1/1919	18¢	20¢	22¢	25¢
April 3/1920	20¢	22¢	24¢	27¢

[fol. 554] Plaintiff's Exhibit 1 of Jan. 19, 1921
[p. 90] Price List 1916

Bone	4/20	7/20	10/25	11/9	11/14	11/20	
Bone	10½	11½				15 & 15½	
#2	10	11				(In Pencil)	
1⅞	12	13		15	17		
1¾	13	14		16	18	18 (In pencil)	
1⅝	13½	14½		16½	18½	19 (Grd. no flake) (Above in pencil)	
1½	14	15	15½ & 16	17	19	18½ (Grd. & 19½ Fl. (Above crossed out in pencil with 20¢ above the 19½ in pencil.	

1⅜..	14½	15½	16 & 16½	17½	19½	19½ (Grd. & 22½ Fl. 19½ crossed out in pencil)
1¼	15½	16½	17½	18½	20½	26
1-X	16½	17½	18½	19½	21½	28½
#1	17	19	20	21	23	30
#1Ex	18	20	22–23	24	26	32½
AEx	19	21	23–25	27	29	35
2AEx	..	22	....	..	..	37½
3AEx	20	23	25	30	32	40

1½¢ added for opeque.

Plaintiff's Exhibit 2 of Jan. 19, 1921

(First Sheet)

Price List 1917 & 1918

	1-4	3-8	8-6	3-25-18		
1⅞	18	21		15	18	(In pencil)
1¾	19	22		19	20	" "
1⅝..	20	23		21	22	" "
1½	22	25		24	Jt	(In pencil)
1⅜	25	28	..	26	28	" "
1¼	27	30		28	29	30 (In pencil)
1-X	30	33	35	33		
#1 ...	32	35	40	38		
#1Ex	35	38	43	40	41	(In pencil)
AEx..	40	43	48	45		
2AEx ..	45	50				
4AEx		55				
Gel	65	70	70	70	70	

[fol. 555]

(Second Sheet)

Price List 1918

	Test	3-25	4-15	1-1-19
Bone	38–42	15	18	16
1¾	45	19	20	18
1⅝	46	21	22	20
1½	47	24	24	22
1⅜	49	26	26	23½
1¼	51	28	29	27

	Test	3-25	1-15	1-1-19
1-X	53	33	33	30
#1	57–6	38	38	35
# Ex	61	40	41	38
A Ex	68–6	45	45	42
2 A				
3 A	75–78			
4 A				
Gel	65	70	75	

(Third Sheet)

January 1, 1919

Grade	Test	1-1-19	5-1-19	1-3-20
1⅞	43–45	16	15	17
1¾	45–46	18	16	18
1⅝	46–47	20	18	20
1½	47–48	22	20	22
1⅜	48–50	23½	22	24
1¼	50–52	27	25	27
1 X	52–55	30	28	30
# 1	55–59	35	33	35
1 Ex	59–62	38	38	40
A Ex	62–68	42	42	45
Gel	65	75	80	80
(In Pencil)				
Bone				
Martin 1/10/19		14¢		
" 1/13/19		14		
Darling 1/13/19		14		

[fol. 556] Plaintiff's Exhibit 1 of Jan. 11, 1921

Oil Paint and Drug Reporter

Prices Current on Animal Glue

From January 2, 1911 to November 11, 1912, inclusive—

Extra White	per lb.	18c	to 24c
Medium White			
Cabinet	per lb.	13c	to 15c
low grade	" "	10c	to 12c
Foot Stock	" "	12c	to 14c
Brown	" "	9c	to 11c
Common Bone	" "	7½c	to 9c

From November 18, 1912 to June 12, 1916, inclusive—

Extra White	per lb.	18c	to 24c
Medium White	" "	12c	to 18c
Cabinet	" "	13c	to 15c
Low Grade	" "	10c	to 12c
Foot Stock	" "	12c	to 14c
Brown	" "	9c	to 11c
Common Bone	" "	7½c	to 9c

From June 19, 1916 to October 23, 1916, inclusive—

Extra White	per lb.	18c	to 24c
Medium White	" "	16c	to 17c
Cabinet	" "	13c	to 15c
Low Grade	" "	14c	to 15c
Foot Stock	" "	12c	to 14c
Brown	" "	9c	to 11c
Common Bone	" "	10c	to 14c

From October 30, 1916 to July 9, 1917, inclusive—

Extra White	per lb.	25c	to 33c
Medium White	" "	22c	to 23c
Cabinet	" "	19c	to 20c
Low Grade	" "	20c	to 21c
Foot Stock	" "	18c	to 19c
Brown	" "	15c	to 17c
Common Bone	" "	16c	to 20c

From July 16, 1917, to September 10, 1917, inclusive—

Extra White	per lb.	33c	to 35c
Medium White	" "	28c	to 32c
Cabinet	" "	25c	to 28c
Low Grade	" "	25c	to 28c
Foot Stock	" "	22c	to 24c
Brown	" "	18c	to 22c
Common Bone	" "	20c	to 25c

[fol. 557] From September 17, 1917, to October 29, 1917, inclusive—

Extra White	per lb.	33c	to 35c
Medium White	" "	30c	to 35c
Cabinet	" "	30c	to 40c
Low Grade	" "	25c	to 28c
Foot stock	" "	22c	to 24c
Brown	" "	20c	to 25c
Common bone	" "	20c	to 23c

From November 5, 1917 to December 31, 1917, inclusive—

Extra White	per lb.	35c	to 45c
Medium White	" "	30c	to 35c
Cabinet	" "	30c	to 40c
Low Grade	" "	25c	to 28c
Foot Stock	" "	22c	to 24c
Brown	" "	20c	to 25c
Common bone	" "	20c	to 23c

From January 7, 1918, to February 18, 1918, inclusive—

Extra White	per lb.	35c	to 45c
Medium White	" "	30c	to 35c
Cabinet	" "	30c	to 40c
Low Grade	" "	25c	to 28c
Foot Stock	" "	22c	to 24c
Brown	" "	20c	to 25c
Common bone	" "	18c	to 22c

From Feb. 27, 1918, to April 15, 1918, inclusive—

Extra White	per lb.	35c	to 45c
Medium White	" "	30c	to 35c
Cabinet	" "	30c	to 40c
Low Grade	" "	23c	to 27c
Foot Stock	" "	20c	to 24c
Brown	" "	20c	to 25c
Common bone	" "	16c	to 22c

From April 22, 1918, to April 29, 1918, inclusive—

Extra White	per lb.	35c	to 45c
Medium White	" "	30c	to 35c
Cabinet	" "	30c	to 40c
Low Grade	" "	23c	to 27c
Foot Stock	" "	18c	to 23c
Brown	" "	18c	to 23c
Common bone	" "	15c	to 21c

May 6, 1918—

Extra White	per lb.	35c	to 45c
Medium White	" "	30c	to 35c
Cabinet	" "	30c	to 40c
Low Grade	" "	23c	to 27c
Foot Stock	" "	18½c	to 23c
Brown	" "	18c	to 23c
Common Bone	" "	15c	21c

[fol. 558] May 13, 1918—

Extra White	per lb.	35c	to 45c
Medium White	" "	30c	to 35c
Cabinet	" "	30c	to 40c
Low Grade	" "	23c	to 27c
Foot Stock	" "	18½c	to 23c
Brown	" "	18c	to 23c
Common Bone	" "	15c	to 21c

May 20, 1918—

Extra White	per lb.	35c	to 45c
Medium White	" "	30c	to 35c
Cabinet	" "	30c	to 40c
Low Grade	" "	23c	to 27c
Foot Stock	" "	19c	to 23c
Brown	" "	18½c	to 23c
Common bone	" "	15½c	to 27c

May 27, 1918—

Extra White	per lb.	35c	to 45c
Medium White	" "	30c	to 35c
Cabinet	" "	30c	to 40c
Low Grade	" "	23c	to 27c
Foot Stock	" "	19c	to 23c
Brown	" "	18½c	to 23c
Common Bone	" "	15½c	to 27c

June 3, 1918—

Extra White	per lb.	35c	to 45c
Medium White	" "	30c	to 35c
Cabinet	" "	30c	to 40c
Low Grade	" "	23c	to 27c
Foot Stock	" "	19c	to 23c
Brown	" "	18½c	to 23c
Common Bone	" "	15½c	to 21c

June 10, 1918—

Extra White	per lb.	36c	to 45c
Medium White	" "	31c	to 35c
Cabinet	" "	31c	to 40c
Low Grade	" "	24c	to 27c
Foot Stock	" "	20c	to 23c
Brown	" "	19½c	to 23c
Common Bone	" "	16½c	to 21c

June 17, 1918—

Extra White	per lb.	36c	to 45c
Medium White	" "	31c	to 35c
Cabinet	" "	31c	to 40c
Low Grade	" "	24c	to 27c
Foot Stock	" "	16c	to 22c
Brown	" "	18c	to 22c
Common Bone	" "	15c	to 20c

[fol 559] June 24, 1918—

Extra White	per lb.	36c	to 45c
Medium White	" "	31c	to 35c
Cabinet	" "	31c	to 40c
Low Grade	" "	24c	to 27c
Foot Stock	" "	16c	to 22c
Brown	" "	18c	to 22c
Common Bone	" "	15c	to 20c

July 1, 1918 to December 2, 1918, inclusive—

Extra White	per lb.	36c	to 45c
Medium White	" "	31c	to 35c
Cabinet	" "	31c	to 40c
Low Grade	" "	24c	to 27c
Foot Stock	" "	16c	to 22c
Brown	" "	18c	to 22c
Common Bone	" "	15c	to 20c

December 9, 1918 to January 6, 1919, inclusive—

Extra White	per lb.	36c	to 45c
Medium White	" "	31c	to 35c
Cabinet	" "	28c	to 40c
Low Grade	" "	22c	to 26c
Foot Stock	" "	15c	to 20c
Brown	" "	16c	to 20c
Common Bone	" "	14c	to 18c

January 13, 1919, to April 7, 1919, inclusive—

Extra White	per lb.	36c	to 45c
Medium White	" "	31c	to 35c
Cabinet	" "	26c	to 38c
Low Grade	" "	20c	to 25c
Foot Stock	" "	14c	to 18c
Brown	" "	15c	to 19c
Common Bone	" "	13c	to 17c

April 14, 1919, to May 12, 1919, inclusive—

Extra White	per lb.	35c	to 40c
Medium White	" "	30c	to 35c
Cabinet	" "	25c	to 36c
Low Grade	" "	20c	to 25c
Foot Stock	" "	13c	to 18c
Brown	" "	14c	to 18c
Common Bone	" "	11c	to 15c

May 19, 1919, to August 4, 1919, inclusive—

Extra White	per lb.	35c	to 40c
Medium White	" "	30c	to 35c
Cabinet	" "	25c	to 36c
Low Grade	" "	20c	to 25c
Foot Stock	" "	13c	to 18c
Brown	" "	12c	to 16c
Common Bone	" "	10c	to 15c

[fol. 560] Aug. 11, 1919, to April 26, 1920, inclusive—

Extra White	per lb.	35c	to 40c
Medium White	" "	30c	to 35c
Cabinet	" "	25c	to 36c
Low Grade	" "	20c	to 25c
Foot Stock	" "	13c	to 18c
Brown	" "	11c	to 15c
Common Bone	" "	12c	to 16c

May 3, 1920, to May 31, 1920, inclusive—

Extra White	per lb.	35c	to 45c
Medium White	" "	30c	to 35c
Cabinet	" "	25c	to 36c
Low Grade	" "	20c	to 25c
Foot Stock	" "	16c	to 20c
Brown	" "	16c	to 20c
Common Bone	" "	16c	to 20c

June 7, 1920, to June 21, 1920, inclusive—

Extra White	per lb.	35c	to 45c
Medium White	" "	30c	to 35c
Cabinet	" "	25c	to 36c
Low Grade	" "	20c	to 25c
Foot Stock	" "	"17c	to 21c
Foot Stock	" "	17c	to 21c
Common Bone	" "	16c	to 20c

June 28, 1920, to October 18, 1920, inclusive—

Extra White	per lb.	35c	to 45c
Medium White	" "	30c	to 35c
Cabinet	" "	25c	to 36c
Low Grade	" "	22c	to 26c
Foot Stock	" "	19c	to 22c
Brown	" "	19c	to 22c
Common Bone	" "	18c	to 21c

October 25, 1920, to November 1, 1920, inclusive—

Extra White	per lb.	35c	to 45c
Medium White	" "	29c	to 34c
Cabinet	" "	25c	to 36c
Low Grade	" "	21c	to 25c
Foot Stock	" "	19c	to 22c
Brown	" "	19c	to 22c
Common Bone	" "	18c	to 21c

[fol. 561] In United States District Court

Report of the Master on Accounting—Filed Nov. 9, 1922

To the Honorable the Judge of said Court, sitting in Equity:

I, John S. Lawrence, to whom the above entitled cause was referred, as Master in Chancery of the Court, by an order entered therein on the fifth day of August, 1921, do hereby certify and report:

1. That, having made a draft of my report in said cause, I served true copies thereof on the solicitors for each of the parties thereto, together with a notice that I would receive objections to said proposed report up to a time stated in said notice.

2. That, thereafter, I received from the solicitors for the defendant written objections to said draft of report which objections I annex thereto, marked "Master's Exhibit Defendant's Objection."

3. That the time for filing objections to my said draft of report has expired and no objections in any form or at any time were filed by the plaintiff or in its behalf.

4. That, therefore, I reviewed my report with reference to the objections of the defendant, and having given them due and mature consideration and remaining of the same mind, I overruled each of the said objections contained in the above mentioned exhibit.

5. That thereupon, I signed the said draft of report and filed the same in the office of the *office of the* clerk of this Court, being the report filed by me in the above entitled cause on the ninth day of November, 1922,

All of which is respectfully submitted.

Dated at Grand Rapids, Michigan, November 9, 1922.

John S. Lawrence, Master in Chancery.

[fol. 562] In the District Court of the United States for the Western District of Michigan, Southern Division

In Equity

Perkins Glue Company, Plaintiff,

vs.

Holland Furniture Company, Defendant

To the Honorable the Judge of said Court, sitting in equity:

The undersigned, one of the Masters in Chancery of said Court, to whom was referred the matter specified in a decree of said Court in said cause, made and entered on the 5th day of August, 1921, begs leave respectfully to report:

That in and by said decree it was Ordered, Adjudged and Decreed that the said defendant, Holland Furniture Company, has infringed upon the exclusive rights secured to the plaintiff by re-issued Letters Patent of the United States, 13,436, and especially as to claims 13, 28, 30, 31 and 38 thereof, and that said Letters Patent and especially as to said claims thereof are good and valid in law as limited by the disclaimer duly filed in the United States Patent Office February 6, 1919.

And also that the plaintiff do recover from the defendant Holland Furniture Company, the gains, savings, profits and advantages which the said defendant has derived, received or made or which have accrued to it from said infringement

of said re-issued Letter Patent 13,436, by employing processes and making, selling and using products in infringement of said Letters Patent aforesaid, and that said plaintiff do recover in addition thereto any and all damages which the plaintiff has sustained by reason of all such infringements of its exclusive rights by said defendant.

And that the cause be referred to the undersigned as a Master of the Court to ascertain, take, state and report to the Court on account of the products made, used, or sold by said defendant in infringement of said Letters Patent, and of the amount of such products which the defendant has on hand and also of the gains, savings, profits and advantages which the said defendant has received or which has accrued to it from or through the said infringement and to assess [fol. 563] the damages suffered by the plaintiff by reason of such infringement and report thereon to the Court with all convenient speed.

1. Summons

Subsequent to the entry of said decree and in response to my summons the said defendant, Holland Furniture Company, filed with me in the cause an itemized statement showing all lots of vegetable glue base obtained by it from manufacturers other than the plaintiff which it had used since January 1st, 1913, to make vegetable glue and also that it was unable to give a statement of the number of square feet of spread obtained with the vegetable glue listed by it in its statement, or a statement of the number of feet spread each month or other period, or the amount of vegetable glue used during any period except insofar as it might be indicated by the purchases listed by it, and also that no record whatever is kept by it of the amount of character of veneer made in connection with the use of such glue. The said statement of defendant is hereto annexed, marked "Master's Exhibit 1."

2. Stipulation

I proceeded thereafter with the taking of testimony. Under the provisions of a written stipulation entered into between the parties through their respective counsel, which stipulation is attached hereto marked "Master's Exhibit 2,"

certain testimony heretofore taken before me on the accounting in the combined causes pending in this Court, Equity Nos. 1898 and 1899, Perkins Glue Company vs. Fred E. Hood, et al., and Perkins Glue Company vs. West Michigan Furniture Company and another, was received by me and incorporated in the record to have the same force and effect as if the original had been duly taken in the usual manner on the present accounting.

3. The Scope of this Report

In the opinion filed in the cause the Court uses the following language:

"In the present case, a part of the glue base used by defendants has been produced in the same way and by the same manufacturer; but another part has been produced by another manufacturer by selecting a single grade and [fol. 564] quality of commercial cassava starch and merely sifting out the impurities therein contained. Manifestly the resultant glue base is the same whether consisting of a mixture of starches of different degrees of degeneration or of a single starch of the same degree of degeneration as the mixture. Defendant's final product is obtained by subjecting the glue base to the treatment described in the patent as the second or final step of the patented process and is identical with the glue of the patent; and while, probably, there is not such a complete independence of product and process in the product claims as is contended for by plaintiff, defendant, Holland Furniture Company, does so combine product and process in the preparation of its glue as to infringe the product claims of the patent."

It is clear that the Court has authorized a decree that the defendant has infringed the product claims of the patent.

Nevertheless, I have been directed to receive testimony as to the degeneration of the glue base furnished to the defendant by the Kane Manufacturing Company and used in its infringing product and have done so. Counsel for defendant urges upon me that the Court intended that I should accompany the return of the testimony with findings thereon. No mention of the taking of such testimony is made in the decree and insofar as the decree is concerned

my only warrant for taking testimony and making a finding is the necessity to ascertain whether a glue made up with the Kane base does or does not infringe.

While under the usual practice it would be my duty to find on the testimony adduced before me whether the use of any particular base not passed upon by the Court is within the terms of the decree, I feel bound to read the decree as interpreted by the written opinion of the Court. The language of the opinion is as follows:

"In compliance with the promise made in its answer to one of the interrogatories propounded, defendant, Holland Furniture Company, furnished to plaintiff what is claimed to be a fair sample of the base used by it in the production of its glue. The sample of glue base so furnished has been tested and analyzed by plaintiff's expert who testifies that the starch of which it is composed has been degenerated as [fol. 565] required in the process claims of the patent. Testimony based upon an anlysis of a single sample is not entirely satisfactory and ought not to be accepted as conclusive. If defendant's glue base consists of a starch which has been degenerated as described in the patent, the process claims declared upon are infringed. On the other hand, if the starch base has not been so degenerated, the process claims are not infringed. Further proof upon this question may be taken by either party upon the accounting."

It was admitted (See accounting testimony, p. 313) that the glue base analyzed by plaintiff's expert was a fair sample of the entire glue base furnished the defendant by the Kane Manufacturing Company. Plaintiff insists that this admission put an end to any duty I have in the premises; in other words, that, if all the Kane glue base was the same as that analyzed, the Court has decided Dr. Grosvenor's testimony to be controlling. With this contention I am unable to agree. The opinion of the Court nowhere says this but is limited to an expression of dissatisfaction with such a meager amount of testimony on a subject of large importance in the case and for this very reason orders that additional testimony be taken to ascertain whether or not the glue base in question has been degenerated as described in the patent. If it is, the process claims are infringed. If it is not, the process claims are not infringed.

The testimony taken before me was elaborate and completely covered the field. I listened to it with interest and have considered it with great care and come to the deliberate conclusion that, except as may be inferred by the conclusion that the Kane glue base must have been degenerated because the ultimate result is the Perkins glue, no degeneration whatsoever has been proved independently. All the testimony points to the contrary and especially the test experiment prescribed in the patent and conducted in my presence on the premises of the Grand Rapids Gas Light Company as described in the testimony.

I find therefore that the process claims of the Perkins patent are not infringed by defendant's use of the Kane glue base.

This finding cannot be used however, as a basis for my computations on the accounting. The product claims of the patent have been decreed to be infringed and the defendant's entire profit resulting from such an infringement must be calculated and reported.

[fol. 566] 4. Standards of Comparison

I have reviewed the finding I made in my reports in the above mentioned cases, Nos. 1898 and 1899, respecting the Standards of Comparison offered by each of the parties and remain of the same opinion respecting them. I find that animal glue is the only available standard of comparison.

5. Prices of Animal Glue during the Infringing Period

I adopt the prices of animal glue during the infringing period as given in my reports in the above mentioned cause, Nos. 1898 and 1899, for the reasons stated in my said reports, being the prices set forth in my computation hereinafter.

6. The Relative Spreads of Animal and Vegetable Glue

It must be kept in mind that we are not setting against the actual use of the defendant of vegetable glue in its operations an actual use of animal glue in the same class of its operations, but a theoretical use of the latter,

"The trade standard of comparison is a particular case is that prior process or thing which next to the complainant's invention could have been most advantageously used by the defendant in place of that invention at the time he used it." Walker on Patent, Sec. 734, and cases cited.

The plaintiff introduced testimony here tending to show that animal glue would only spread over two-thirds of the square foot area of a like number of pounds of vegetable glue. That is to say, fifty per cent more of animal glue would be required for a given area. This testimony was given by one Moomaw, a salesman for plaintiff, who stated he was familiar with defendant's operations. (See accounting record p. 133). No attempt was made by the defendant to meet this testimony, (although the issue was clear-cut), other than by cross examination of the witness. It might perhaps have been shown that animal glue could have been so used as to produce a more favorable result as compared with vegetable glue than stated by this witness, but this was not attempted.

It may be that the foregoing seems inconsistent with my findings in the matter of comparative glue spread in the above mentioned case of Perkins Glue Company vs. West Michigan Furniture Company, et al., though I question it. In that case it was attempted to fix upon the defendant rates [fol. 567] of spread under conditions arising in other factories and not agreeing with each other. Here as the records stand, the testimony is made applicable to defendant's factory and to that alone. In that case too, there was testimony from inside the factory offered in behalf of the defendant to show that there was in fact little or no difference in the amount of spread, and I therefore held that, in view of the nature of the machinery used in the different factories, the matter of the hardness of the veneers and the policy of the factory, there might be very well a difference in the amount of spread as compared with defendant's factory where there was some sort of testimony to the effect that there was no difference in spread at all.

7. Computations

In response to the summons of the Master requiring the defendant to produce a statement of the vegetable glue

used by it in infringement of the patent in suit, defendant's statement above referred to shows various lots purchased from Kane Manufacturing Company, Solva Waterproof Glue Company and International Process Company,—6,728 pounds from Solva Company; 8,000 pounds from International Process Company and 119,227 pounds from the Kane Company.

As to the Kane Company glue, it appears that the item of 406 pounds under date of January 4, 1921, was an experimental batch (accounting record p. 130), used in a somewhat different way, and as to this, plaintiff has waived an accounting.

It is also admitted by the plaintiff that 12,400 pounds of the Kane glue was not used because of the issuing of the injunction in the cause, (accounting record p. 130).

In the following computations, the first column gives the respective dates of defendant's purchases of infringing vegetable glue; in the second column, the cost thereof to defendant; in the third column, the price paid by defendant per pound therefor; in the fourth column, the number of pounds in the respective lots; in the fifth column, the price per pound, of 1⅜ grade animal glue of standard of comparison, and in the last column, the value or cost of the same number of pounds of such animal glue.

[fol. 568] Holland Furniture Company Infringement

Vegetable Glue Purchased from Solva Waterproof Glue Co.

		Vegetable glue		Animal glue, 1¼ grade, price	
Date	Cost	Price per lb.	Quantity	per lb.	Value
Dec. 5, 1916 ..	$6.50	6½¢	100#	22¢	$22.00
Jan. 23, 1917	65.20	6½¢	1,003	25	250.75
Jan. 24, 1917	44.40	6½¢	683	25	170.75
Jan. 24, 1917	268.00	6½¢	4,123	25	1,030.75
Feb. 26, 1917.	53.24	6½¢	819	25	204.75
	$437.34		6,728		$1,679.00

Vegetable Glue Purchased from International Process Co.

Date	Cost	Vegetable glue: Price per lb.	Vegetable glue: Quantity	Animal glue, 1st grade, price per lb.	Value
Sept. 3, 1919	$190.00	9½¢	2,000	22	440.00
Nov. 7, 1919	95.00	9½¢	1,000	22	220.00
Jan. 10, 1920	475.00	9½¢	5,000	22	1,100.00
	$760.00		8,000		$1,760.00

Vegetable Glue Purchased from Kane Manufacturing Co.

Date	Cost	Vegetable glue: Price per lb.	Vegetable glue: Quantity	Animal glue, 1st grade, price per lb.	Value
Oct. 17, 1917	$256.79	8½¢	3,021	28¢	$845.88
July 9, 1918	265.20	13	2,040	26	530.40
Oct. 2, 1918	263.90	13	2,030	26	527.80
Dec. 28, 1918	263.90	13	2,030	26	527.80
Jan. 3, 1919	132.60	13	1,030	23½	242.05
Feb. 3, 1919	734.40	12	6,120	23½	1,438.20
Mar. 10, 1919	703.80	11½¢	6,120	23½	1,438.20
July 14, 1919	1,750.88	11½¢	15,225	22	3,349.50
Oct. 27, 1919	848.54	9½¢	8,932	22	1,965.04
Nov. 17, 1919	115.71	9½¢	1,218	22	267.96
Feb. 18, 1920	888.56	8¾¢	10,155	22	2,234.10
Apr. 17, 1920	1,776.25	8¾¢	20,300	24	4,872.00
July 28, 1920	1,776.25	8¾¢	20,300	24	4,872.00
Feb. 12, 1921	553.00	7	7,900	24	1,896.00
	$10,329.78		106,421		$25,006.93
Totals	$11,527.12		121,149		$28,445.93

[fol. 569] The animal glue equivalent to the vegetable glue purchased and used by the defendant would then have cost it $28,445.93 and as it would have required 50 per cent more of the animal glue to do the same work as the infringing vegetable glue, 50 per cent or $14,222.96, should be added to the above amount, making $42,668.89, the amount that defendant would have had to pay for the

equivalent in animal glue. The defendant is entitled for credit for the amount of vegetable glue used by it, cost $11,527.12 and also $339.22, the cost of the solvent used. Deducting the sum of these $11,866.34, from what the animal glue would have cost, we have the defendant's savings because of the infringement, to an amount of $30,802.55.

8. Damages

No testimony was adduced respecting any damages to the plaintiff in addition to the defendant's gains, profits, savings and advantages derived from the infringement.

9. Stock on Hand

It is not claimed that any of the infringing products remained on hand at the time of the accounting.

Findings

1. I find that the defendant did not infringe the process claims of the patent sued on by the plaintiff because of its use of the Kane glue base.

2. I find that the defendant, Holland Furniture Company, purchased and used 121,149 pounds of glue base because of the use of which it infringed the product claims of the plaintiff's Letters Patent in suit and that its savings because of said infringement amount to $30,802.55.

3. No gains, profits nor advantages except the savings mentioned in finding number 2 and no damages otherwise were claimed or proved.

All of which is respectfully submitted.

John S. Lawrence, Master in Chancery.

Dated at Grand Rapids, Michigan, Nov. 9th, 1922.

[fol. 570] In United States District Court

Defendant's Exceptions to Master's Report

Exceptions taken by defendant, Holland Furniture Company, to the report made herein by John S. Lawrence, one of the Masters of this Court, to whom this cause was re-

ferred by an order of this Court made and entered on the fifth day of August, 1921.

First Exception. The Master erred in holding that:

"It is clear that the Court has authorized a decree that the defendant has infringed the product claims of the patent."

Second Exception. The Master erred in holding that although he found the process claims of the Perkins Patent are not infringed by defendant's use of the Kane glue base

"This finding cannot be used, however, as a basis for my computation on the accounting. The product claims of the patent have been decreed to be infringed and the defendant's entire profits resulting from such an infringement must be calculated and reported."

Third Exception. The Master erred in not considering and deciding the question as to whether or not the glue product produced by the defendant from the undegenerated Kane base infringed the product claims of the Perkins patent; and in not finding that the product claims have not been infringed by the manufacture and use of glue made from the Kane undegenerated base.

Fourth Exception. The Master erred in holding that the fact that the process claims are not infringed

"cannot be used, however, as a basis for my computations on the accounting."

Fifth Exception. The Master erred in holding that:

"animal glue would only spread over two-thirds of the square foot area of a like number of pounds of vegetable glue."

and in holding that

"No attempt was made by the defendant to meet this testimony, (although the issue was clear cut) other than by cross examination of the witness;"

[fols. 571 & 572] and in holding that

"It would have required 50% more of the animal glue to do the same work as the infringing vegetable glue,"

and erred in adding 50% to the difference in cost between the amount of vegetable glue used by the defendant and a like amount of animal glue.

Sixth Exception. The Master erred in finding that any profits were due the plaintiff on account of the use of the Kane glue base.

Travis, Merrick, Warner & Johnson, Solicitors for Holland Furniture Company. James A. Watson, of Counsel.

UNITED STATES PATENT OFFICE.

FRANK G. PERKINS, DECEASED, LATE OF LANSDALE, PENNSYLVANIA, BY GERTRUDE S. PERKINS, EXECUTRIX, OF SOUTH BEND, INDIANA, ASSIGNOR TO PERKINS GLUE COMPANY, A CORPORATION OF PENNSYLVANIA.

VEGETABLE GLUE

1,078,691. Specification of Letters Patent. Patented Nov. 18, 1913.

No Drawing. Application filed March 16, 1912. Serial No. 684,297.

To all whom it may concern:

Be it known that FRANK G. PERKINS, deceased, late a citizen of the United States, and a resident of Lansdale, borough of Lansdale, State of Pennsylvania, did invent certain new and useful Improvements Relating to Vegetable Glue, of which the following is a specification.

The invention relates to improvements in the making of glue such as is suitable for gluing up veneers, from vegetable carbohydrates.

The invention is more particularly directed to improvements in, or modifications of, the processes and products described in Reissue Letters Patent No. 13,436 and Letters Patent No. 1,020,656. In those patents there were described certain methods for producing a vegetable glue, suitable for gluing up veneers, in which a starchy carbohydrate base was treated to reduce the water absorptive powers thereof and properly proportion the viscosity, cohesiveness and adhesiveness resulting when the carbohydrate was suitably dissolved to form glue. However, in those processes as generally carried out, the resulting glue base consisted chiefly of a carbohydrate in which all of the material had been treated to the same extent by the process there described, to secure this proper proportioning. In some cases such a method is impracticable or impossible owing either to local circumstances and conditions or owing to high cost. The improved process and product herein described is designed to avoid such disadvantages, and furthermore, it is designed to make useful and available for the making of a wood glue, those factory lots of material which, owing to the carelessness of the workmen, or to other causes, may have been excessively treated or otherwise damaged for the use or making of glue by themselves. The improvements herein described are therefore not mainly for the purpose of producing a better glue than described in those co-pending applications, but rather are designed to provide a cheaper process and product which may be more easily and successfully carried out, or to utilize waste material, to produce a glue of the same quality.

One main feature of the improvements herein described consists in the proper proportioning of the viscosity, cohesiveness and adhesiveness of the glue base when properly put into solution with the aid of caustic soda or other suitable solvent of cellulose, by the blending of products having different, and in themselves undesirable, qualities, so that if they were so dissolved separately the resulting products would have an undesirable relative viscosity, cohesiveness and adhesiveness, and the carrying out of the blending in such a manner and with such proportions that the relative viscosity, cohesiveness and adhesiveness of the resulting mixture when dissolved, shall be properly proportioned, partly by averaging, and also, it is believed, partly by the interaction of the constituents themselves.

In the process described in the said Reissue Letters Patent No. 13,436, all the material is affected by the preliminary treatment, so that it is believed the mean polymerization of the starch is so altered as to properly proportion the physical properties of the base when suitably dissolved. It is not yet certain but that small quantities of dextrin may possibly be formed in said process which unite in some way (as solid solution or colloidal aggregate) with unaltered or partly altered starch stuff of the granule, but this is not believed to be the case. When, however, the starch or other carbohydrate is dissolved in caustic or similar solvent, various carbohydrate aggregates form with water and caustic alkali a colloidal aggregate, the viscosity of which is generally believed to be dependent on the degree of polymerization, which degree is not thought to be uniform in the colloids (like that of crystalline bodies having a fixed molecular weight), but to be rather the mean degree of more or less widely divergent atomic groups united in considerable numbers into cumbrous colloidal aggregates having mean physical properties. As the colloidal state of the finished glue is produced during the making of the batches liquid by means of caustic and water, it is believed that any mixture of different carbohydrates adapted to form with one another and with the caustic and the water when colloidally united, a product or compound having a proper mean polymerization without too great diversity of its constituents, will yield a glue having the desired relative viscosity, cohesiveness and adhesiveness, the one to the other, re-

quired to produce a satisfactory glue for gluing up veneers.

It is believed to be immaterial, considering the mean molecular weight or polymerization of the desired resulting product, whether a large part of the base has a condition of slightly lower molecular weight and a small part of the base has a molecular weight very much higher, or whether a small part of the base has a molecular weight very much lower and a relatively larger part of the base has a molecular weight only slightly higher than that desired as the mean state of polymerization, or whether nearly equal portions of the carbohydrates are used, one of which is only slightly higher in degree of polymerization or molecular weight, and the other is only slightly or equally lower in degree of polymerization or molecular weight.

Having now described some of the principles upon which this invention is based, certain examples of preparing a glue base in accordance with this invention will be given, from which anyone skilled in the art will be able to carry out the processes and produce products in accordance with this invention.

Example 1: A glue base may be made by the proper mixture of raw cassava starch and potato dextrin, or British gum, or commercial corn dextrin. To do this take good, fresh cassava starch such as would be obtained from the cassava plant grown in Florida by washing, grinding, sieving, rewashing and tabling, and then drying the same, using about two quarts of dry caustic soda 76° to each 2000 lbs. of starch in the rewashing water and also using about 2 lbs. of bluestone or copper sulfate with all waters used, to each 2000 lbs. of starch for the purpose of preventing undue bacterial action. With 70 parts of the cassava starch or flour thus prepared, mix 30 parts by weight of the best commercial corn dextrin as regularly marketed in this country. The mixture may be made during, or just before, the drying process of the starch, but in mixing with dextrin it is preferred to mix it with the starch after the starch has dried, using finely powdered dextrin, and making the mixture as intimate as possible with ordinary mechanical means. In this example it will be observed that a large quantity of unconverted or unchanged starch and a small quantity of highly altered or almost completely converted starch (*i. e.* dextrin), have been used, thus combining two unequal portions of products, one of which (a much larger quantity) has an extremely high degree of polymerization, and the other (a much smaller quantity) has an extremely low degree of polymerization. With different cassava flours which have been used as low as 5% and as high as 75% of commercial corn dextrin has been taken to produce glue bases in which the relative viscosity, cohesiveness and adhesiveness would be properly proportioned when the base was dissolved to form glue. But for the manufacture of good glues suitable for gluing up veneers, it is preferred to use about 30% of corn dextrin when mixing with such a grade of cassava starch as described above. Slightly more or less of potato dextrin or British gum than of corn dextrin, would be used, but the different varieties of dextrin obtainable on the market seem to produce less difference in the results than do the various starches, so that the substitution of one dextrin for another does not generally make as much difference as the substitution of one starch for another.

Example 2: Sago flour may be used instead of using cassava, and in that case about 40% of commercial corn dextrin is used instead of 30%. The mixture is made in substantially the same way as described above, but when suitably dissolved with water and caustic the glue is not quite as permanently fluid as the glues produced by other mixtures, since it tends to gelatinize more readily.

Example 3: Sago flour may be treated with chlorin or alkaline hypochlorites, acids etc., to alter it and thereby, it is believed, render it lower in its degree of polymerization. For instance, it may be heated with 1/2 of 1% of hydrochloric acid while stirring in about 14° Baumè suspension in water, and to this mixture 1/6 its volume of fresh solution of bleaching powder in water may be added, the whole being stirred together intermittently for 48 hours and neutralized with NaOH, after which 1/2% NaOH in 16 parts of water and 1/4% of Na_2O_2 in 32 parts of water may be added, and later enough HCl to neutralize the batch. If, when washed and dried, this product is mixed up with 9 times its own weight of water, and boiled up with live steam at 100 lbs. pressure for 10 minutes, the resulting hot liquid will have a viscosity to flow through a small orifice (Perkins's viscosimeter) about 15/16 as great as that of cold water, evidencing, it is believed, a very considerable depolymerization or degradation of the starch molecules. In order to make a usable glue base with such a product 15 parts of it may be mixed with 43 parts of raw cassava flour as sold on the market under the grade M—4, and also 42 parts its weight of glue base such as produced by the process set forth in said Reissue Letters Patent No. 13,436, carrying said process to the point where the viscosity of the product in the 9 to 1 boil-up has been reduced to 18 seconds, in Perkins's viscosimeter. The resulting mixture of the three different kinds of treated amylaceous matter, will, when properly dissolved or treated

with a solvent of cellulose and water, give a very satisfactory wood glue. It is to be observed that in this case equal parts of an overtreated product and a product not treated, and a different product much too depolymerized, have been mixed to produce a product, the mean polymerization of which when dissolved, will be that desired to produce a glue suitable for gluing up veneers.

Example 4: In this example the said acid process as set forth in said Reissue Letters Patent No. 13,436, is applied to cassava flour, M—4, and extended to such a point that the viscosity test with Perkins's viscosimeter, made with the 9 to 1 boil-up, as described in said Reissue Letters Patent, shows a viscosity equal to 21/16 that of water. Such a product would be regarded as having been overtreated, so that it is unsuitable for use alone in making glue. If, however, equal parts of this overtreated product and of raw cassava of grade M—4 be thoroughly mixed together, the resulting mixture will be found to have a satisfactory mean polymerization, and be satisfactory as a glue base to be dissolved with caustic soda and 2½ parts of water.

Various other starches such as that known in Florida under the name of Comptie starch, potato starch, &c., may be similarly used. The mixing together, for the purpose of proportioning the mean polymerization to produce the necessary relative viscosity, cohesiveness and adhesiveness of the resulting product, may be done with the starches when dry, if the mixture is very thoroughly carried out. It is preferred, however, to do the mixing in the wet state, after such processing or other preliminary treatment to which the starch has been subjected (except where dextrin is being used), as under these circumstances the starch is completely distributed throughout the liquid, and the different kinds can thus be mixed together more thoroughly, and furthermore, as during the process of separation of the liquid and the subsequent processes of drying and preparation for shipment, the mixture is continually made more and more thorough.

Example 5: High grade cassava flour treated by the acid process as described in said Reissue Letters Patent 13,436, but in which the process has been carried somewhat too far so that the viscosity shown by Perkins's viscosimeter on the 9 to 1 boil-up is 22 seconds as compared with 16 seconds for water, is mixed with an equal weight of the same cassava treated in accordance with the preliminary treatment described in said Letters Patent No. 1,020,656, but in which, however, the treatment has only been carried sufficiently far to reduce the viscosity as tested by the said 9 to 1 boil-up, to from 70 to 90 seconds, and not far enough to produce a satisfactory glue. One of these products, it will be observed, has not been sufficiently treated to make a satisfactory glue, whereas the other has been too much treated to give the desired result. If, however, the two are mixed in equal proportions a glue base will be produced which upon being dissolved as hereafter described, will produce a satisfactory glue having substantially the final adhesiveness of good animal glue, and suitable for gluing up veneers.

It is desirable here to point out that the mean viscosity secured is not exactly the average of the two viscosities which are characteristic of the two different materials. Thus it would be expected from the proportions used that a mean viscosity in the neighborhood of 50 would be secured, whereas the viscosity of the resulting product actually secured in the cases where this has been tried, has been slightly different than would be expected. It is from such facts that it is believed that some other reaction or grouping takes place while the starch grains are undergoing the process of combination with caustic and water to form the viscous colloid which constitutes the glue.

Example 6: It has been found by experience that if the preliminary treatment of the acid process, as described in said Reissue Letters Patent No. 13,436, has been carried too far in the treatment of cassava, grade M—4, so as to produce a product which, in the 9 to 1 boil-up, showed, in Perkins's viscosimeter, a viscosity of 20 seconds as compared with water at 16 seconds, such a product could still be made available for the making of a good glue by taking 3 parts of this overtreated acid process product and mixing it with two parts of raw cassava, grade M—4, and with 5 parts of glue base produced in accordance with the process set forth in said Letters Patent 1,020,656, in which the treatment has been carried to such a point that the 9 to 1 boil-up shows a viscosity of 34 seconds, in Perkins's viscosimeter. The resulting 10 parts of glue base when thoroughly mixed together and dissolved as above described, produce a glue having a desired consistency and flowing qualities such as would be obtained with either of the glue bases prepared from cassava starch alone, by the processes as described in either of said copending applications. In putting into solution such composite glue bases, it is preferred to use no heat, but instead a slightly increased portion of a solvent of cellulose, as caustic soda, *i. e.*, instead of using 110° Fahrenheit and about 7% by weight of the glue base of caustic, about 8% or 10% 76° caustic similarly dissolved in from 2 to 3 parts of water, is used. This diluted caustic soda solution is added slowly with con-

tinued stirring until the mixture is observed to come across or pass over from a mixture of starch suspended in water and caustic to a homogeneous colloidal solution of starch, water and caustic.

During the earlier stages of the addition of caustic little difference in appearance of the mass has been apparent. Soon, however, it becomes creamy and more pasty and difficult to stir. When about half of the caustic has been added there has been observable a minute mottled effect on the surface of the batch which gradually assumes a translucent porcelain-like appearance. If, at this time, a little of the mixture was squeezed between glass plates, portions of the mixture were observed to be transparent and almost invisible, while other portions presented much the appearance of the original mixture of starch suspended in water. As the addition of caustic proceeded accumulations of clearer matter occurred on the sides of the vessel and stirrers, and finally when the proper amount of caustic had been added the entire mass passed over to a homogeneous colloidal compound of starch, caustic and water. A little excess of caustic may be added to prevent decomposition of the compound by carbonic acid or moisture of the air.

It will be apparent from all these examples that the present process for preparing carbohydrates in order to properly proportion the viscosity, cohesiveness and adhesiveness of the product obtained when that product shall be dissolved in a suitable solvent of cellulose to form a semi-fluid glue, differs from the two processes as more generally carried out by the particular methods described in said Letters Patent in that, as more generally carried out the treatment applied to the raw material whatever it may be, in order to make the glue base, is substantially the same treatment applied to each particle of the raw material, and the glue base when made consists of a number of particles each of which is modified or changed in substantially the same manner, and consequently any portion of the resulting base might be taken to make the glue by dissolving, whereas in the present process several series of different kinds of particles are mixed, each of a different kind, one or more of which by itself would not be capable of producing a satisfactory glue. Or the process of adjustment or proportioning of viscosity, cohesiveness and adhesiveness may be said to consist in this case, not in the precisely limited treatment of every particle of the material, but in the precise or proper proportioning of the amount of differently treated material used to make up the glue base.

It will be apparent that the invention is not limited to the use of any particular grade or quality of raw material, nor to any specific proportions in the admixture of these raw materials. Different carbohydrates may be used, as for instance dextrin used with starch, cellulose used with starch, cellulose used with dextrin, or any of the various degeneration products obtainable from any of the carbohydrates may be used, the proper proportions of which will be readily ascertained from the foregoing by those skilled in the art, so that when the finally mixed product shall be put into solution with a suitable solvent of cellulose and about 3 parts of water or less the resulting product or compound shall be a thick slow flowing semi-fluid mass exhibiting a quick tack and the ability to hair out in long fibers when freshly moistened surfaces are separated, exhibiting when quickly separated, a crackling sound, and capable of flowing through pipes and spreading by machinery and capable of joining two surfaces of wood when properly applied and dried with a layer having a greater cohesive and adhesive strength than the mean lateral strength of the wood.

Having thus fully and clearly described the invention and given a number of specific examples by which the invention may be carried out and its nature understood, what is claimed and desired to be secured by Letters Patent is:

1. The process of making a base for wood glue, which consists in taking a carbohydrate the viscosity of which, when dissolved in about 3 parts of water and caustic soda, is too great to produce a satisfactory glue, and mixing therewith a carbohydrate, the relative viscosity, cohesiveness and adhesiveness of which when so dissolved in the same manner, is unsatisfactory for glue, in proportions such that the relative viscosity, cohesiveness and adhesiveness of the resulting mixture when so dissolved in the same manner, are properly proportioned to produce a semi-fluid glue suitable for gluing up veneers.

2. The process of making a base for wood glue, which consists in taking two or more starchy carbohydrates, one or more of which, when dissolved in about 3 parts of water and caustic soda, has a viscosity greater than that desired in the final glue, and one or more of which, when so dissolved in the same manner, has a viscosity less than that desired in the finished glue, and mixing said carbohydrates in proportions approximately inverse to the relative differences in viscosity said carbohydrates have when so dissolved in the same manner, from the desired resulting viscosity of the mixture when so dissolved in the same manner, to produce a semi-fluid glue suitable for gluing up wood veneers.

3. The process of making a base for glue,

which consists in taking a plurality of starchy carbohydrates, one or more of which, when dissolved in about 3 parts of water and caustic soda, has a viscosity greater than that desired in the resulting glue, and one or more of which carbohydrates, when so dissolved, has a viscosity less than that desired in the finished glue, and a relative viscosity, cohesiveness and adhesiveness which is unsatisfactory for woodwork, and mixing said carbohydrates in proportions to produce a semi-fluid glue capable of being applied by machinery and suitable for gluing up veneers.

4. The process of making wood glue, which consists in taking a plurality of starchy carbohydrates, one or more of which, when dissolved in about 3 parts of water and caustic soda, has a relative viscosity greater than that desired in the final glue, and one or more of which, when so dissolved in the same manner, has a relative viscosity, adhesiveness and cohesiveness unsatisfactory for gluing up veneers, and mixing said carbohydrates in proportions such that, when so dissolved in the same manner, the resulting product will have a relative viscosity, cohesiveness and adhesiveness suitable for gluing up veneers, and then dissolving the mixture in about 3 parts of water or less and caustic, to form a semi-fluid glue capable of being applied by machinery.

5. A wood glue base, consisting of a mechanical mixture of different carbohydrates, one or more of which, dissolved in about 3 parts of water and caustic soda, has a viscosity greater than that desired in the final glue, and one or more of which when so dissolved in the same manner, has a relative viscosity, adhesiveness and cohesiveness unsatisfactory for gluing up wood veneers, the proportions of said carbohydrates being such that the relative viscosity, cohesiveness and adhesiveness of the resulting mixture, when so dissolved in the same manner, is suitable for gluing up veneers.

6. A wood glue base, consisting of a mechanical mixture of different starchy carbohydrates, one or more of which when dissolved in about 3 parts of water and caustic soda, has a viscosity greater than that desired in the final glue, and one or more of which when so dissolved in the same manner, has a relative viscosity, adhesiveness and cohesiveness unsatisfactory for gluing up veneers, and one or more of which, when so dissolved in the same manner, has a relative viscosity, cohesiveness and adhesiveness suitable for gluing up veneers, the proportions of said carbohydrates being such that the relative viscosity, cohesiveness and adhesiveness of the resulting mixture, when so dissolved in the same manner, is suitable for gluing up wood veneers.

7. A wood glue base embracing a mechanical mixture of raw starch and soluble starch in proportions such that, when the mixture is dissolved in about 3 parts of water and caustic soda, the resulting mixture will have a relative viscosity, cohesiveness and adhesiveness such that it is capable of being applied by machinery and suitable for gluing up veneers.

8. A semi-fluid colloidal vegetable glue having substantially the adhesiveness of the best animal glue, and capable of producing a joint between pieces of wood stronger than the mean lateral strength of the wood, and consisting essentially of starch combined by about 3 parts of water or less and caustic alkali with dextrin.

9. A vegetable glue having substantially the adhesiveness of good animal glue and capable of producing a joint between pieces of wood stronger than the mean lateral strength of the wood, and consisting essentially of a colloidal compound of two or more different carbohydrates, one or more of which, dissolved in about 3 parts of water and caustic soda, has a viscosity greater than that desired in the final glue, and one or more of which when so dissolved in the same manner, has a relative viscosity, adhesiveness and cohesiveness unsatisfactory for gluing up veneers, the proportions of said carbohydrates being such that the relative viscosity, cohesiveness and adhesiveness of the resulting mixture, when so dissolved in the same manner, is suitable for gluing up veneers.

10. A vegetable glue capable of producing a joint between pieces of wood, stronger than the mean lateral strength of the wood, and consisting essentially of a colloidal compound of a plurality of different starchy carbohydrates, one or more of which dissolved in about 3 parts of water and caustic soda, has a viscosity greater than that desired in the final glue, and one or more of which when so dissolved in the same manner, has a relative viscosity, adhesiveness and cohesiveness unsatisfactory for gluing up veneers, and one or more of which, when so dissolved in the same manner, has a relative viscosity, cohesiveness and adhesiveness suitable for gluing up veneers, the proportions of said carbohydrates being such that the relative viscosity, cohesiveness and adhesiveness of the resulting mixture, when so dissolved in the same manner, is suitable for gluing up veneers.

11. The process of making wood glue which consists in combining two or more different starchy carbohydrates with about 25% or more of their weight of water and about 4% or more of their weight of caustic alkali to form a colloidal compound, and regulating the relative cohesiveness, adhesiveness and viscosity of the resulting compound by adjustment of the proportions of

the various carbohydrates, to produce a semi-fluid glue having when suitably applied and dried a tensile and adhesive strength superior to the mean lateral strength of the wood and having a viscosity suitable for application by machinery.

12. A vegetable glue consisting essentially of a colloidal compound, with about 3 parts of water or less and caustic soda, of two or more starchy carbohydrates, one or more of which dissolved in about 3 parts of water and caustic soda, has a viscosity greater than that desired in the final glue, and one or more of which when so dissolved in the same manner has a relative viscosity, adhesiveness and cohesiveness unsatisfactory for gluing up veneers, the proportions of said carbohydrates being such that the relative viscosity, cohesiveness and adhesiveness of the resulting mixture, when so dissolved in the same manner, is suitable for gluing up veneers.

13. A wood glue base, consisting of a mechanical mixture of different carbohydrates, one or more of which are derived from the cassava plant, and one or more of which, dissolved in about 3 parts of water and caustic soda, has a viscosity greater than that desired in the final glue, and one or more of which when so dissolved in the same manner, has a relative viscosity, adhesiveness and cohesiveness unsatisfactory for gluing up wood veneers, the proportions of said carbohydrates being such that the relative viscosity, cohesiveness and adhesiveness of the resulting mixture, when so dissolved in the same manner, is suitable for gluing up veneers.

14. A wood glue base, consisting of a mechanical mixture of starchy carbohydrates, one or more of which, dissolved in about 3 parts of water and caustic soda, has a viscosity greater than that desired in the final glue and one or more of which when so dissolved in the same manner has a relative viscosity, adhesiveness and cohesiveness unsatisfactory for gluing up wood veneers, the proportions of said carbohydrates being such that the relative viscosity, cohesiveness and adhesiveness of the resulting mixture, when so dissolved in the same manner, is suitable for gluing up veneers.

In testimony whereof I have signed my name to this specification in the presence of two subscribing witnesses.

GERTRUDE S. PERKINS,
Executrix of the estate of Frank G. Perkins.

Witnesses:
GORHAM CROSBY,
EDWIN SEGER.

UNITED STATES PATENT OFFICE.

FRANK G. PERKINS, DECEASED, LATE OF LANSDALE, PENNSYLVANIA, BY GERTRUDE S. PERKINS, EXECUTRIX, OF SOUTH BEND, INDIANA, ASSIGNOR TO PERKINS GLUE COMPANY, A CORPORATION OF PENNSYLVANIA.

PROCESS FOR MAKING GLUE.

1,078,692. Specification of Letters Patent. Patented Nov. 18, 1913.

No Drawing. Application filed March 16, 1912. Serial No. 684,298.

To all whom it may concern:

Be it known that FRANK G. PERKINS, deceased, late a citizen of the United States, and a resident of Lansdale, borough of Lansdale, State of Pennsylvania, did invent certain new and useful Improvements Relating to a Process for Making Glue, of which the following is a specification.

The invention relates to improvements in processes for making vegetable glue and more particularly improvements over the processes claimed in Reissue Letters Patent No. 13,436 and Letters Patent No. 1,020,656.

According to the processes described in those patents, a suitable carbohydrate base was first treated to decrease its water absorptive properties, or so proportion the relative viscosity, cohesiveness and adhesiveness of the resulting product, when the carbohydrate was dissolved in about three (3) parts of water and a suitable solvent of cellulose, as caustic alkali, that the resulting product was suitable to glue up veneers. After this preliminary treatment, the carbohydrate was then, according to those processes, preferably dried and then dissolved in caustic and water to form glue. Therefore, in those processes, as more particularly described, the process was carried out in two operations, quite distinct from one another, thus necessitating very considerable time, labor and expense. Moreover those processes as generally carried out were such that the first operation was carried out at one factory and then the dried base shipped to the place where the glue was to be used, where the second or last operation was carried out.

One main object of the present invention is to so modify or improve those processes that the whole process may be carried out in one substantially continuous operation in shorter time, and with much less labor and expense, and so that large consumers will be enabled to make up their glue from raw carbohydrate in a simple and efficient manner and without installing any additional special apparatus.

The present invention in one form may be said to consist in suitably modifying the last step or operation of the processes described in said patents by prolonging the same with or without an increase in temperature whereby the caustic soda alone acts as a substitute for the caustic soda and peroxid of soda, or as a substitute for the acid or other suitable starch degenerating agents, to produce in the glue-dissolving kettle itself, a series of reactions by which the viscosity, cohesiveness and adhesiveness of the carbohydrates, when finally dissolved, shall be more or less affected simultaneously with, or in substantially the same operation as, the treatment which puts the carbohydrate into solution.

The success of this treatment depends to a considerable extent on the character of the carbohydrates used. Various starches and flours may be used but in each case the treatment should be slightly modified in order to adjust it to the particular characteristics of the raw material used. Even the same kinds of starch manufactured from plants of a different growth or found in a different locality, or even starches from the same plant separated by slightly different processes of manufacture, are found to differ sufficiently to require modification in the treatment. The starches or flours obtained from corn, wheat, potato, sago palm and the cassava plants have all been tried with success but for most purposes the most convenient and economical starches have proven to be those derived from the cassava plant and sold on the market as cassava flour of the grades M—4, M—5 or "Royal." Examples of the process as carried out with starches known as cassava M—4 and cassava M—5 and Royal, will first be given and then a more general specification will be given, by which anyone skilled in the art may apply the process to other flours and starches and produce usable results, and by slight adjustment of this general treatment it may be readily modified to adapt itself more particularly to the starch in question, and produce increasingly satisfactory results, as will be understood by those skilled in the art.

Example 1: 250 pounds of dry cassava flour, grade M—4, is taken and mixed with

about 750 parts of water. This mixture is made by first adding about 300 of the 750 parts of water and stirring thoroughly until the mixture is complete, after which the balance of the water may be rapidly added. The whole should then be stirred as thoroughly as possible for at least one-half hour. Slightly better results are believed to be obtained by continuing the stirring or at least allowing the batch to stand at rest over night, and then stirring up again, but for commercial purposes one-half hour is all that is regarded as important. If it is desired to have a more fluid glue, it is preferred to have the water heated to about 115 or 120° Fahrenheit when the starch is added, or to have the apparatus arranged in such a manner that heat can be gently applied during the stirring process, and the mass raised to 100 or 110° by the end of the half hour. If a stiff glue for application by specially heavy machinery is desired, this heating may be omitted. To the starch milk as above prepared, and while being strongly stirred and agitated, there is then added with extremely great slowness, 6½ to 7 per cent. of the weight of the starch of 76° caustic soda or an equivalent quantity of caustic potash dissolved in from 2 to 3 times its weight of water. If more water is used the proportion of water in the original mixture should be relatively reduced. If heat is to be omitted and the treatment made cold, a little larger per cent. of caustic is used, approximately 9 to 10 per cent. The rate of the addition of the caustic if continuous, should be made extremely slow, *i. e.*, about one hour for one pint of liquid, or with the batch above described, using 250 pounds of flour and from 50 to 75 pounds of caustic solution, it would require 5 to 18 hours (preferably 18 hours) to add the solution, constantly stirring during this time. If heat is used the liquid may be added somewhat more rapidly, but by the slowness of addition and the degree of heat applied, together with the prolonged and violent stirring, the physical properties and, it is believed, the state of molecular aggregation of the starch in solution, is so affected that when put into solution by the complete addition of the caustic, the viscosity, cohesiveness and adhesiveness of the resulting mixture will be those recognized as desirable for use as a wood glue—that is, such that the resulting glue is capable of being applied by machinery and suitable for gluing up veneers. By increasing the temperature used the amount of caustic required is decreased, and time of operation is shortened.

During the first stages of the operation the caustic is added with such slowness or in such small quantities that tumefying or bursting of the carbohydrate as a whole is prevented, but the starch is altered to an extent sufficient to properly proportion the cohesiveness, adhesiveness and viscosity of the resulting glue, so that it is suitable to glue up veneers; and during the last stages of the operation the addition of caustic causes the whole carbohydrate to pass over or go into solution to form such a glue. During the passing over into solution during the last stages, it is noticed that the creamy batch has at first a faint mottled appearance, produced by the dissolving of some of the starch grains, which mottled appearance gradually increases until practically all of the starch has passed over to form a homogeneous colloidal compound of starch, water and caustic.

Example 2: M—5 cassava flour mixed with 2¾ times its weight of water, to which has been added heat enough to raise it to about 140° Fahrenheit, is slowly treated with a solution of 2 per cent. of its weight of 76° caustic soda in from 2 to 3 parts of water,—the rate of addition of the caustic solution being such as to occupy about 20 minutes, during which time the temperature shall be maintained and preferably raised to 150 or 160° Fahrenheit.

Example 3: The grade of cassava flour sold on the market as "Royal" is suspended in 2¾ times its weight of water by constant stirring and while continuing the stirring, heat is applied, or the original water may have been heated to such a temperature that the temperature of the resulting mixture when made, approximates 100° Fahrenheit. The batch is stirred for ¾ of an hour at substantially this temperature and there is then added to it 7 per cent. of the weight of the starch, of caustic soda in the form of a solution in three parts of water, the temperature and stirring being maintained throughout this time, and the caustic solution added at a rate such that the addition of the solution occupies about 3 hours, during at least the first half of which the temperature is maintained above 100°.

The above examples are given as specific for certain products. The gradual and substantially equable addition of solution of caustic is advantageous for ordinary practical purposes. It seems that the effect of the caustic in the first stages is most satisfactory and rapid when the caustic itself is present in such proportions that the mixture will assume a white creamy consistency, *i. e.*, that some small portion of the starch granules are dissolved. The action of a portion of the starch dissolved in the caustic soda appears to be similar in character to the combined action of caustic soda and peroxid of soda on the remaining starch not dissolved. Since it requires a little more skill to take advantage of this process of treating the starch, a final example illustrating a method more generally applicable

to other suitable starches that have been tried so far, will be given.

Example 4: Any suitable starch or flour mixed up to a milk, with from 2 to about 4 times its weight of water, according to the density of glue desired, and heated to 130° Fahrenheit by such gradual application of heat that the starch itself shall not be tumefied, is then treated with constant stirring by addition of about 4 per cent. of its weight of 76° caustic soda dissolved in three parts of water to one of caustic soda. With some starches all of this 4 per cent. may not be required, and with some others, slightly more, but the addition of the caustic soda solution is continued to that point where the batch while being stirred assumes the white creamy consistency, but does not show much tendency to agglutinate in transparent masses of considerable size. When this point is reached and while maintaining the temperature, stirring is continued for from one-half to ¾ of an hour, after which an additional amount of similar caustic soda solution is added to bring the total amount of caustic soda up to about 7 to 10 per cent. In other words, about 3 to 6 per cent. more of caustic is added to the batch, after which the batch is thoroughly stirred for a short time to put the carbohydrate into solution and to equalize its consistency and composition, and then the batch is preferably allowed to stand for an hour or two before used as a glue.

It will be obvious in all these examples, that the treatment has been such as to permit a portion of the caustic soda used, to act either alone or together with heat, upon the undissolved starch granule, for a period depending on the strength of the caustic and the temperature used. It is believed that a certain portion of the outside integuments of the starch granules, *i. e.*, the portion having the higher molecular weight, is dissolved during this preliminary treatment, and distributed throughout the liquid in such a manner that when the starch granule itself is dissolved by the interior portion being liberated and passing into solution, the viscosity of the two is equalized and possibly some form of molecular combination generated between the two in the viscous colloidal liquid produced in such a manner that the mean viscosity, cohesiveness and adhesiveness of the mixture is properly proportioned to produce glue having a final adhesiveness when properly applied and dried, substantially as great as the best animal glue and suitable for gluing up veneers. Whether the action is exclusively that of the caustic upon the granule, or whether there is some combined action between the various parts of the granule as just indicated, is not certain, but certainly a different and much more profound change is produced by the slow addition or prolonged action of the caustic, or addition of the caustic in small quantities at first (together with temperature) than the slight difference of rate in adding the caustic soda solution would be expected to yield. In other words, it is found that starches which when dissolved in the ordinary manner in caustic soda would show products with such a viscosity that it would be impossible to use them satisfactorily as glue to be applied by machinery, yet when dissolved in this way by the extremely slow addition of caustic together with a suitable temperature, in case it is desired to hasten the action of the caustic, produce semi-fluid glues which can conveniently be applied by machinery and which have all the desired valuable properties of the animal glue for flat gluing, such as gluing up wood veneers. It will be obvious also that different starches require different treatment, but that the same underlying principles control the application, which principles will be readily applied by those skilled in the art, from the examples above given, to other starches of somewhat different character. It is therefore clear that the invention in its broader aspects is not limited to the particular carbohydrates, temperatures or percentages stated, nor to the use of caustic soda alone, as other carbohydrates such as certain grades of celluloses or hemi-celluloses, and other temperatures and percentages, and other caustics such as caustic potash and other solvents of cellulose, such as for instance sodium xanthate, sodium silicate, zinc chlorid and basic lead acetate, will readily suggest themselves to those skilled in the art to meet the peculiar exigencies of each case.

Having fully and clearly described the invention, what is claimed as new and what is desired to be secured by Letters Patent, is:

1. The improved process of making glue, which consists in suspending cassava carbohydrate in water and then adding, with substantially continuous stirring, a solution of caustic alkali with such slowness that tumefying or bursting of the carbohydrate as a whole is avoided during a substantial part of the first stages of the treatment, to proportion the viscosity, cohesiveness and adhesiveness of the resulting glue, so that upon the continued addition of the caustic, and during the last stages thereof, the batch passes over into a semi-fluid glue capable of being applied by machinery, the total amount of water in the glue being about 4 parts or less by weight of dry carbohydrate.

2. The improved process of making vegetable glue which consists in suspending a suitable vegetable carbohydrate in water, and then treating the batch with such an amount of a solvent of cellulose, as caustic alkali, that tumefying or bursting of the carbohy-

drate as a whole is avoided, and such that the viscosity, cohesiveness and adhesiveness of the resulting glue is so proportioned as to make it suitable to glue up veneers, and then adding more solvent of cellulose to the batch until the batch passes over into a semi-fluid glue capable of being applied by machinery, and suitable for gluing up veneers.

3. The improved process of making a wood glue, which consists in suspending a starchy carbohydrate in water, then agitating or stirring the batch and adding caustic alkali in such an amount that tumefying or bursting of the carbohydrate as a whole is avoided, and such that the viscosity, cohesiveness and adhesiveness of the resulting glue is so proportioned as to make it suitable to glue up veneers, and then agitating or stirring the batch and adding more caustic until it passes over into a semi-fluid glue capable of being applied by machinery, and having an adhesiveness substantially as great as good animal glue.

4. The improved process of making a wood glue, which consists in suspending a starchy carbohydrate in water, then agitating or stirring the batch and adding caustic alkali in such an amount that tumefying or bursting of the carbohydrate as a whole is avoided, and such that the viscosity, cohesiveness and adhesiveness of the resulting glue is so proportioned as to make it suitable to glue up veneers, and then agitating or stirring the batch and adding more caustic until it passes over into a semi-fluid glue capable of being applied by machinery, and suitable for gluing up wood veneers, the total amount of water used being about 4 parts or less by weight of dry carbohydrate.

5. The improved process of making vegetable glue, which consists in suspending a suitable vegetable carbohydrate in water, heating the batch to about 100° Fahrenheit or more, and then treating the batch with such a quantity of a solvent of cellulose, as caustic alkali, that tumefying or bursting of the carbohydrate as a whole is avoided, and such that the viscosity, cohesiveness and adhesiveness of the resulting glue is so proportioned as to make it suitable to glue up veneers, and then adding more of the solvent of cellulose to the batch until the batch passes over into a semi-fluid glue capable of being applied by machinery, and suitable to glue up wood veneers.

6. The improved process of making a wood glue, which consists in suspending a starchy carbohydrate in water, then agitating or stirring the batch and adding caustic alkali in such amount that tumefying or bursting of the carbohydrate as a whole is avoided, and such that the viscosity, cohesiveness and adhesiveness of the resulting glue is so proportioned as to make it suitable to glue up veneers, and then agitating or stirring the batch and adding more caustic until it passes over into a semi-fluid glue capable of being applied by machinery and having a final adhesiveness substantially as great as good animal glue, the total amount of water used being about 3 parts or less by weight of dry carbohydrate, and the batch being heated to about 100° Fahrenheit or more.

7. The improved process of making vegetable glue, which consists in suspending a suitable vegetable carbohydrate in water, and stirring the batch for about one-half hour or more, and then treating the batch with such small quantities of a solvent of cellulose, as caustic alkali, that tumefying or bursting of the carbohydrate as a whole is avoided, and such that the viscosity, cohesiveness and adhesiveness of the resulting glue is so proportioned as to make it suitable to glue up veneers, and then adding more solvent of cellulose to the batch until the batch passes over into a semi-fluid glue capable of being applied by machinery, and suitable for gluing up veneers.

8. The improved process of making vegetable glue which consists in suspending cassava carbohydrate in water, and stirring the batch for about one-half hour or more, and then heating to about 100° Fahrenheit, or more, and treating the batch with such small quantities of a solvent of cellulose, as caustic alkali, that tumefying or bursting of the carbohydrate as a whole is avoided, to proportion the viscosity, cohesiveness and adhesiveness of the resulting glue, so that it is suitable to glue up veneers, and then adding more of the solvent of cellulose to the batch until the batch passes over into a semi-fluid glue capable of being applied by machinery, and having an adhesiveness substantially as great as good animal glue, the total amount of water used being about 4 parts or less by weight of dry carbohydrate.

9. The improved process of making vegetable glue, which consists in treating a suitable vegetable carbohydrate with water and with such an amount of a solvent of cellulose that tumefying or bursting of the carbohydrate as a whole is avoided, and such that the viscosity, cohesiveness and adhesiveness of the resulting glue are so proportioned as to make it suitable to glue up veneers, and then further treating the batch with said solvent until the batch passes over into a semi-fluid glue capable of being applied by machinery, and suitable for gluing up veneers.

10. The improved process of making vegetable glue, which consists in treating a suitable vegetable carbohydrate with water and with such an amount of a solvent of cellulose that tumefying or bursting of the carbohydrate as a whole is avoided, and such that the viscosity, cohesiveness and adhesiveness

of the resulting glue are so proportioned as to make it suitable to glue up veneers, and then further treating the batch with said solvent and with additional heating until the batch passes over into a semi-fluid glue capable of being applied by machinery, and suitable for gluing wood.

In testimony whereof I have signed my name to this specification in the presence of two subscribing witnesses.

GERTRUDE S. PERKINS.
Executrix of the estate of Frank G. Perkins.

Witnesses:
GORHAM CROSBY,
EDWIN SEGEL.

UNITED STATES PATENT OFFICE.

WILLIAM M. GROSVENOR, OF RIDGEWOOD, NEW JERSEY, ASSIGNOR TO PERKINS GLUE CO., A CORPORATION OF PENNSYLVANIA.

PROCESS OF MAKING GLUE AND THE LIKE.

1,200,488. Specification of Letters Patent. Patented Oct. 10, 1916.

No Drawing. Application filed November 25, 1912. Serial No. 733,317.

To all whom it may concern:

Be it known that I, WILLIAM M. GROSVENOR, a citizen of the United States, and a resident of Ridgewood, county of Bergen, and State of New Jersey, have invented certain new and useful Improvements in Processes of Making Glue and the like, of which the following is a specification.

My invention relates more particularly to improvements in processes for making vegetable glue, and especially to improvements over the processes described in United States Letters Patent, No. 1,020,656 and Reissue Letters Patent No. 13436. According to the specific examples described in those patents, a suitable carbohydrate base was first treated to decrease its water absorptive properties, or so proportion the relative viscosity, cohesiveness and adhesiveness of the resulting product, when the carbohydrate was dissolved in a small amount of water and alkali, that the resulting product was suitable for gluing up veneers. After this preliminary treatment, the carbohydrate was then, according to those processes, dissolved in alkali and water to form glue. Therefore, according to the specific examples set forth in those patents, a certain degeneration of the starch or carbohydrate, or a certain proportioning of resulting viscosity, cohesiveness and adhesiveness, was obtained before it was put into solution. Such preliminary treatment consumes much time and labor, and it is the main object of this invention to provide a modified process which may be carried out in practically one stage and in a much shorter time, and with less labor and expense. In meeting this object I have discovered that in colloidal solutions of certain carbohydrates such as starch, a marked change may be produced in the properties of the solution by prolonged stirring. With certain colloidal solutions of starch, caustic soda and water, which when first mixed are very viscous, and even gelatinous, I find that with prolonged stirring the solution may be made quite liquid. In fact, such an adhesive solution which would not have the desired viscosity to be applied by machinery for gluing up veneers may be made sufficiently liquid for this purpose by such prolonged stirring. This prolonged stirring I believe produces a marked change in the molecular structure of the solution whereby it may be given the necessary permanent relative viscosity, cohesiveness and adhesiveness properly proportioned to form a glue suitable for gluing up wood and capable of being applied by machinery. This molecular change, I believe, comprises a certain degeneration of the starch, or reduction of its molecular dimensions, in the solution which consists in decreasing the extension of the side chains on the molecules to form a solution with shorter or fewer molecular side chains, which, I believe, accounts for the increase in fluidity.

As an example of my invention for making glue I take 250 lbs. of raw cassava starch or meal of medium quality and suspend the same in 800 lbs. of water. The mixture is then stirred for one-half hour. With continued stirring I then add 25 lbs. of caustic soda dissolved in 75 lbs. of water. This caustic soda solution is added to the batch gradually but quite rapidly taking, say, only one-half hour for putting in the entire amount of caustic. The addition of the caustic causes the starch to pass over into what I believe can be best termed a colloidal solution of starch alkali and water. This solution, however, does not have the desired viscosity, adhesiveness and cohesiveness properly proportioned for a commercial glue. Principally it is too viscous. In order, therefore, to give to the mixture the desired viscosity, cohesiveness and adhesiveness, and increase its fluidity, I continue the stirring for five hours or until the batch has acquired the necessary permanent fluidity and spreadability, so that it is applicable by machinery for gluing wood or veneers. When I say the resulting product acquires the necessary permanent fluidity and viscosity for veneering I mean that the fluidity and viscosity of the glue is sufficiently permanent for the art in question. When made according to the preferred method the glue will retain the necessary permanent fluidity for use for days. In place of this continual stirring the mixture may be allowed to stand without stirring for different periods, especially where convenience of operation in the factory requires it. For instance, the batch may be stirred for five hours in the afternoon and then allowed to stand over night, after which it may be stirred for about five hours before using the next day.

In such case, however, only about three parts of water to one part by weight of dry starch should be used.

The desired endpoint of the alkali treatment is considered as reached when the viscous, thread-drawing product acquires the necessary spreadability. The fluidity and spreadability may be tested by inserting a stick in the batch and then withdrawing the same. When the glue will flow from the stick steadily and evenly without breaking off, the stream becoming thinner and thinner until only a very fine thread remains, and when it can be easily spread on the hand and shows an extremely tenacious adhesiveness, then the glue is considered to have the desired properties. If this point of spreadability has not been reached the stirring or standing, or both, may be continued without further addition of alkali until the desired reaction is completed.

The total amount of water put into the batch is preferably kept down to about three parts or less by weight to one part by weight of starch. If too much water is used the resulting batch does not have sufficient body or adhesiveness to be suitable for a commercial wood glue. However, the amount of water may be varied to some extent but preferably it should be lessened if a glue of exceptional binding power is desired. Also the amount of caustic soda or other equivalent solvent of the starch may be widely varied although preferably only a slight excess should be used over what is necessary to cause the carbohydrate to pass over into a substantially clear colloidal solution. The percentage of caustic may be much decreased if the process is carried out with heat, the amount of alkali required being decreased according as the temperature used is increased. The addition of the caustic in the above example is made so quickly that the starch is put into solution before it has been degenerated toward soluble starch or dextrin to any material extent, but the glue is given the desired spreadability particularly important for machine application by the suitably prolonged action thereof after the starch has gone into solution.

Although I have described my improvements in great detail with respect to one particular embodiment of the invention, nevertheless, I do not desire to be limited to such details except as clearly specified in the appended claims, since many changes, modifications and other adaptations may be made without departing from the spirit and scope of my invention in its broader aspects.

Having fully and clearly described my improvements, what I claim as new and desire to secure by Letters Patent, is:—

1. The improved process of making glue which consists in suspending cassava starch in water and then adding with rapid stirring a solution of caustic alkali, the addition being done so quickly that the starch is put into solution before it has been degenerated to any material extent, and continuing the stirring after the starch has gone into solution until the viscosity of the batch has been decreased to that point where it has the necessary permanent spreadability for gluing up veneers.

2. The improved process of making glue which consists in mixing starch, water and alkali to form a solution of starch which has not the desired relative viscosity, adhesiveness and cohesiveness for gluing veneers or being applied by machinery, and then stirring the batch until the batch does assume the necessary permanent relative fluidity, adhesiveness and cohesiveness suitable for gluing up veneers.

3. The improved process for making glue which consists in mixing starch, caustic and about three parts by weight of water to one part by weight of starch to form a solution of the starch, and then stirring the batch to reduce its viscosity until the batch has necessary permanent fluidity to be applied by machinery for gluing wood.

4. The improved process of making wood glue which consists in making a solution of starch in alkali and water which has not the necessary permanent fluidity, and then stirring the batch to increase the fluidity thereof until it has the necessary permanent fluidity for wood work.

5. The improved process of making wood glue which consists in making a solution of starch in alkali and water which is too viscous, and then stirring the batch for about five hours or more until it becomes sufficiently permanently fluid to be applied by machinery for gluing up veneers.

6. The improved process of making veneer glue, which consists in decreasing the viscosity of a colloidal solution of starch and water, the amount of water present being about three parts or less by weight to one part by weight of starch, by giving the batch a prolonged stirring to increase the fluidity thereof and render the fluidity substantially permanent.

7. The improved process of making glue which consists in suspending starch in water and then adding a solution of caustic, the total amount of water being about three parts or less by weight to one part of starch and the amount of caustic being sufficient to put the starch into colloidal solution, and then stirring the batch until its fluidity has been increased to a point where it has the necessary permanent fluidity for wood work.

8. The improved process of making glue which consists in suspending cassava starch in water and then adding a solution of caustic, the total amount of water being about three parts or less by weight to one part

of starch and the amount of caustic being sufficient to put the starch into colloidal solution, and then stirring the batch for about five hours or more until its fluidity has been increased to a point where it has the necessary permanent fluidity for gluing wood.

9. The improved process of making glue which consists in suspending starch in water and then adding alkali with agitation, the addition being done so quickly that the starch is put into solution before it has been degenerated to a material extent to produce a mass too viscous, and then further stirring the batch to increase its fluidity until it has the necessary permanent fluidity for being applied by machinery for gluing wood.

10. The improved process of making glue which consists in making a solution of a carbohydrate in alkali and water, and then agitating the batch to increase the fluidity thereof until it has the necessary permanent fluidity for application by machinery for gluing wood.

11. The improved process of making glue which consists in suspending a starchy carbohydrate in water and then adding a solution of caustic, the total amount of water being about three parts or less by weight to one part of carbohydrate and the amount of caustic being sufficient to put the carbohydrate into colloidal solution, and then agitating the batch until its fluidity has been increased to a point where it has the necessary permanent fluidity for application by machinery for gluing wood.

In testimony whereof, I have signed my name to this specification, in the presence of two subscribing witnesses.

WILLIAM M. GROSVENOR.

Witnesses:

GORHAM CROSBY,

ADAM SCHMIDT.

W. M. GROSVENOR.

PROCESS OF GLUING WOOD.

APPLICATION FILED JAN. 16, 1918.

1,299,705. Patented Apr. 8, 1919.

Fig. 1.

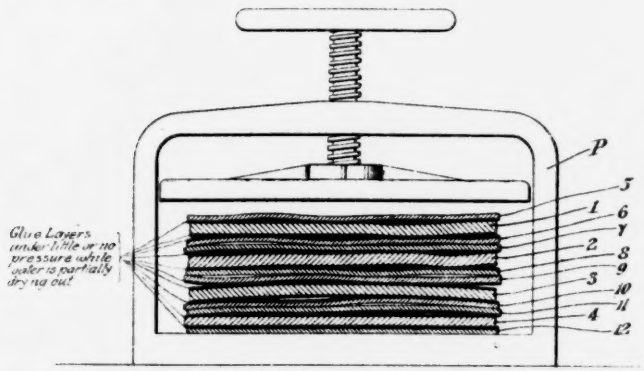

Fig. 2.

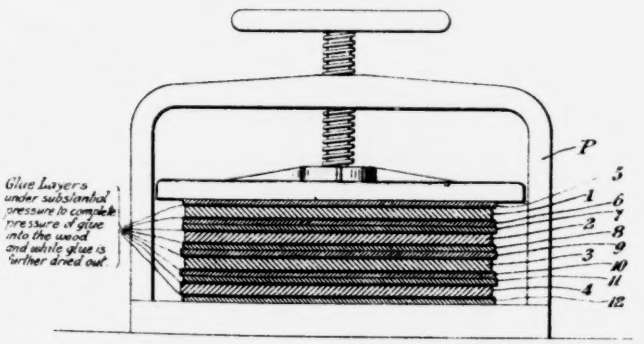

Inventor

William M. Grosvenor.

By his Attorney

Graham Crosby.

588

UNITED STATES PATENT OFFICE.

WILLIAM M. GROSVENOR, OF NEW YORK, N. Y., ASSIGNOR TO PERKINS GLUE COMPANY, A CORPORATION OF PENNSYLVANIA.

PROCESS OF GLUING WOOD.

1,299,705. Specification of Letters Patent. Patented Apr. 8, 1919.

Application filed January 16, 1918. Serial No. 212,045.

To all whom it may concern:

Be it known that I, WILLIAM M. GROSVENOR, a citizen of the United States, and a resident of New York city, in the county of New York and State of New York, have invented certain new and useful Improvements in Processes of Gluing Wood, of which the following is a specification.

My invention relates to improvements in processes for gluing wood and is particularly applicable to the gluing up of wood panels, veneers and joints for furniture and similar work. For many years animal glue was the only glue generally used for this purpose, but this has now been largely supplanted by vegetable glue, made from a starchy carbohydrate base, water and a solvent. In the making of such vegetable glue, cassava starch has been generally used, and it has generally been found necessary to hydrolyze or degenerate the starch a certain extent before dissolving it in the water with the solvent, and in spite of such degeneration it has been found that from 2 to 3 parts of water are used in order to get a glue sufficiently fluid for general application. If more water is added to make the glue more fluid, or it is rendered more fluid by other means, so that it might be commercially applied by hand brush or machine for joint work, then, when the glued surfaces are pressed together in the usual manner, it is found that so much of the glue is forced into the wood, due to its fluidity, that insufficient is left on the surface to make a desirable joint and, furthermore, the large amount of water so wets the wood that a much longer time is required for drying out, a disadvantage quite serious in most commercial practice. If such fluid vegetable glue be applied to wood veneers, and especially thin veneers, much the same difficulties are encountered, even if the glue be just as viscous as regular vegetable glue, but contains an excessive amount of water.

The object of my invention is to provide a process whereby these difficulties, attendant on the use of relatively fluid glues or glues containing a relatively large amount of water may be substantially overcome.

I find that when such dilute glues are applied and then promptly subjected to high pressure, as is done in commercial practice, the glue is forced deep into the pores of the wood, or much of it forced out sidewise, or both, thereby preventing a desirable joint from being obtained. According to my invention, after the glue is applied, I allow it to stand without any pressure, or only slight pressure being applied for a time sufficient to permit a substantial amount of the water to dry out of the glue, before subjecting the glue of the joint to the relatively heavy pressure. By allowing the glue to stand before completing the pressure of the glue into the wood pores, the glue loses some of water to the wood or to the air, or both, and thickens somewhat, after which the relatively heavy pressure no longer causes excessive penetration or material squeezing out at the edges. I find that the water absorbed by the wood before the glue is pressed materially into the wood is more quickly dried out than is the water in the glue pressed into the wood. I find that the depth of penetration of the glue into the wood pores depends upon the fluidity of the minute portions of the glue which have already penetrated, and the pressure applied, and that the less the glue is forced into the wood, the quicker the wood will dry out, and that the less the glue is forced out sidewise, together with the less it is forced into the wood, the more glue is left between the wood surfaces to form the joint, although finally there must be sufficient penetration into the wood for the glue to take a firm hold thereon to form a secure joint. Thus during the first stage there is no material penetration of the glue into the wood and then when the relatively heavy pressure is applied the glue is only forced into the superficial pores of the wood sufficient to secure a good hold thereon, so that ample glue is left between the wood surfaces to form a strong joint.

The examples given below taken in connection with the accompanying sheet of drawings, will enable those skilled in the art to readily understand my invention and to enable them to make use of the same.

In the drawings Figure 1 is an elevation of a press containing a stack of veneers with the glue applied thereto but without any substantial pressure being applied thereto. In the specific example illustrated they are merely subjected to the pressure of their own weight. The veneers are allowed to stand in this condition until a substantial part of the water has dried out of the glue

thereon. This illustrates the first step of the process. In Fig. 2 the second step is illustrated, in which the press is operated to apply pressure to further force the glue into the pores of the wood and the glue allowed to substantially dry out under pressure.

In the drawings core pieces are indicated at 1, 2, 3 and 4 with a layer of glue on each side thereof. Veneers 5 and 6 with a coating of glue applied thereto on the sides adjacent the core 1, are placed adjacent the core 1, as shown in Fig. 1. Veneers 7 and 8, 9 and 10, and 11 and 12 with similar glue coated surfaces are placed against the cores 2, 3 and 4 in the same manner, respectively, and the whole arranged to form a stack in the press, P.

After the necessary amount of water has dried out of the glue, pressure is applied to the stack as indicated in Fig. 2 and the glue forced into the superficial pores of the wood and further drying out is allowed while the layers are still under pressure.

Example 1: 100 pounds of corn starch are suspended in 343 to 368 pounds of water, and during constant agitation thereof 8 pounds of caustic soda dissolved in 32 pounds of water are slowly added, about 20 minutes being taken for the addition. The addition of the caustic soda causes the starch to be dissolved into a homogeneous colloidal glue. The stirring is preferably continued until the batch is used up, as standing tends to cause it to gelatinize. While this glue will flow readily through two inch pipes, the pipes should be cleaned of glue before being allowed to stand idle for any prolonged period, as for a day or more. The glue is preferably applied to both wood surfaces to be joined, but good results can be obtained by application to one surface only, and it gives better results if at least one of the wood members is greater than ¼ inch in thickness. In order that the relatively large amount of water in the glue (3¾ to 4 parts by weight, per part of dry starch base) may not prove disadvantageous, the glued wood surfaces, after being placed in juxtaposition to one another, are allowed to stand for about ½ hour, with the pressure of their own weight merely, or without any substantial pressure being applied, so that a substantial part of the water will dry out of the glue before the glue is materially pressed into the wood, or before completing the pressure of the glue into the wood. Then a relatively heavy pressure of 100 pounds per square inch may be applied to complete the pressure of the glue into the wood and the glue allowed to further dry out and set under such pressure.

In selecting the corn starch base, a starch having a viscosity of from 20 to 26 at 20 to 1 by Perkins viscosimeter, is preferred. The Perkins viscosimeter may be constructed of brass tubing 1.295 inches outside diameter, 0.012 inch thick, and 3 inches long, and having a flat brass bottom 0.080 inch thick soldered into the end having a round center hole 0.070 inch in diameter, the total weight being 39.63 grams, and all edges being made smooth removing practically no weight, the hole being polished until the cup placed quickly at its floating level in water at 60° F. floats upright and fills up to the point of sudden sinking by top overflow in 16 seconds.

In making the viscosity test above described, about 350 grams of starch may be mixed with 20 times its weight of water and boiled for 10 minutes with dry live steam at 100 pounds pressure and tested for viscosity while at about 195° F. by placing the Perkins cup viscosimeter therein and measuring the number of seconds for it to sink by top overflow. When I speak of the viscosity being 20 to 26 at 20 to 1, I mean that it takes from 20 to 26 seconds for the cup viscosimeter to sink when the amount of water in the boil is 20 times the weight of the starch. When considerably more degenerated starches are tested, only 9 parts of water may be used, or 9 to 1.

In the example of glue above described, if slightly more water be used, as for instance, 4¼ parts instead of 3¾ parts, the glue will be rendered more fluid and more easily applied with a brush and used for joint work. In such case, however, it is desirable to allow a somewhat longer time for more water to dry out of the glue on the wood before applying the relatively heavy pressure to the glue joint.

Example 2: Good quality cassava starch is degenerated to a point such that it has a viscosity of about 40 at 9 to 1 when treated by the method above described. The degeneration may be accomplished in any suitable manner, as by the method described in U. S. Patent 1020656. 100 pounds of this degenerated starch is mixed with 700 pounds of water and 4 pounds of caustic soda added in a solution thereof containing 60 pounds of water. The caustic soda solution is added slowly while the temperature of the batch is raised to about 160° F. or somewhat less, and with continued agitation. When the batch has been transformed into glue and become clear, 25 pounds gum tragacanth, powdered to pass through a 60 mesh sieve, is added and stirred in while the temperature of the batch is maintained from 140° F. to 160° F. for 1½ hours. This gives a relatively fluid glue, easily applied by a suitable brush, but owing apparently to the introduction of the gum tragacanth, the glue does not seem to penetrate the wood pores so readily as would be expected.

In applying this glue, and especially to

veneers, it is, however, preferable to allow the surfaces to be glued to remain in contact for about 3 hours without any substantial pressure being exerted on the joint, after which time a pressure of about 100 pounds per square inch or more may be applied until the glue is practically dry and set.

Example 3: 100 pounds of raw cassava starch having a viscosity of about 100 at 20 to 1, when tested as above described, is suspended in 368 pounds of water and 8 pounds of caustic soda, dissolved in 32 pounds of water, is gradually added with continued stirring, and the stirring preferably continued for about ½ hour after the caustic solution has all been added. The resulting glue is less viscous or more fluid than the glue produced when the degenerated starch base of Example 2 is dissolved in 2½ times its weight of water with the 8% of caustic soda. Also the glue is not particularly prone to gelatinize on standing if occasionally stirred, and after being applied to veneers, and the wood surfaces brought into juxtaposition, the veneers are preferably allowed to stand for about 20 minutes with less than 20 pounds per square inch pressure applied thereto, after which a pressure of 100 pounds per square inch or more may be applied. The glue is more specially useful for heavy veneers and block work or core stock.

Example 4: 100 pounds of raw potato starch having a viscosity of 55 at 20 to 1 when tested by the method above described, are suspended in 280 pounds of water, and 4 pounds of caustic soda, dissolved in 20 pounds of water, are gradually added, with constant stirring, during a period of about 1 hour, during which time the temperature of the batch is raised from 130° F. to a temperature from 150° F. to 160° F. The resulting glue is best applied warm and the pipes through which it is distributed kept heated to a little above 140° F. until emptied. After the glue is applied to the wood, it should be allowed to stand 10 or 15 minutes without any substantial pressure being applied to the joint, after which the relatively heavy final pressure may be applied in the usual manner. However, if the wood is hot, the time of standing should be increased to about ½ hour before the heavy pressure is applied.

Example 5: 100 pounds of raw cassava starch having a viscosity of about 80 at 20 to 1 when tested by the above described method, are mixed with 700 pounds of water, and 10 pounds of caustic soda, dissolved in 100 pounds of water, are slowly added with constant stirring until the batch is transformed into a homogeneous solution, and then 30 pounds of gum tragacanth, powdered to pass through a 60 mesh to the inch sieve, are added and thoroughly stirred in for about 2 hours. The resulting glue is thin enough to be applied with a suitable brush, preferably a wire brush. After the glue is applied and the wood faces placed in juxtaposition to one another, the joints are allowed to stand for ½ hour under their own weight, and then a pressure of 100 pounds per square inch is applied.

Example 6: The gum tragacanth may be introduced before the addition of the caustic, but the resulting glue in such case is more fluid than if added afterward, other things being the same. For example, 100 pounds of the degenerated starch base of Example 2 and 25 pounds of gum tragacanth, powdered to 60 mesh, are suspended in 350 pounds of water, and 4 pounds of caustic soda, dissolved in 30 pounds of water, are slowly added while the temperature of the batch is gradually raised to 150° F. to 160° F. with continual rapid agitation. The rapid agitation is best continued until the glue is cold and the glue may be applied cold preferably to both faces to be joined. The glued surfaces should be allowed to stand for about 3 hours without material pressure being applied to the joints, after which 100 pounds per square inch may be applied to the joints until the glue has practically set.

Instead of gum tragacanth, other highly water absorbent material producing viscous solutions when mixed with water, may be used, as for instance viscose, or the xanthate of cellulose or xanthate of starch may be used.

Example 7: 100 pounds of cassava starch of good quality having a viscosity of about 90 at 20 to 1 when tested as above described, is suspended in 468 pounds of water and 8 pounds of caustic soda, dissolved in 32 pounds of water, together with 10 pounds of carbon bisulfid, are slowly added during continued rapid agitation, until the batch comes across into a homogeneous glue solution. The stirring is preferably not unnecessarily prolonged thereafter. The starch is, I believe, put into the form of xanthate of starch. After the glue has been applied to the wood, it should be allowed to stand for about ½ hour without material pressure being applied to the joints, after which 100 pounds per square inch pressure may be applied.

Example 8: A solution of sodium aluminate is first prepared by dissolving freshly precipitated aluminum hydroxid containing about 15% actual $Al(OH)_3$, washed nearly free from salts, in the molecular quantity of caustic soda in solid form (about 98% NaOH) to produce sodium aluminate. The solution should contain 22.5% of sodium aluminate Na_2AlO_3. About 24.6 pounds of this solution containing about 5.5 pounds of Na_2AlO_3 are added to 375 pounds of water and 100 pounds of the degenerated cassava starch base of Example 2 are then stirred in

and the temperature raised to about 160° F. until the suspended starch and water are transformed into a homogeneous adhesive solution. The stirring is then continued until the batch is cold. If desired, the aluminum hydroxid may be added after the starch has been suspended in cold water containing the 3.5% of caustic soda and then the temperature raised to bring about solution, the liquid, upon the raising of the temperature, containing actually, or in effect, Na_2AlO_2. Sometimes it is desirable to add about 10% more of the Na_2AlO_2 than above indicated. After the glue is applied to the wood, it should be allowed to stand for a substantial period without materially pressing the glue into the wood to allow a substantial part of the water to dry out of the glue after which the final pressure may be applied to the joint to complete the pressure of the glue into the wood.

Example 9: Good quality cassava starch is degenerated to a point where its viscosity is about 60 at 9 to 1, when tested by the method above described. The degeneration may be carried out by any suitable method, such as by the degenerating agents specified in U. S. Patent 1020656. 100 pounds of this degenerated starch base are mixed with 368 pounds of water and 3 pounds of caustic soda, dissolved in 32 pounds of water, gradually added during twenty minutes, with continual agitation, and while the batch is kept at about 145° F. The resulting glue may be used hot or cold, but after application to the wood, the surfaces to be glued are placed adjacent one another and slight pressure applied, but insufficient to cause the glue to be materially pressed into the wood pores. After about ½ hour, the pressure is increased to complete the pressure of the glue into the wood pores and the glue is permitted to further dry out and set under this increased pressure.

Example 10: Good quality raw cassava starch having a viscosity of 90 to 100 at 20 to 1 when tested as above described, is mixed with twice its weight of water, and while being agitated ¾% (based on dry weight of the starch) of caustic potash in 10% solution in water is added. There is also added about the same time, from ¼% to 1% of sodium peroxid in 5% solution in water. The mixture is agitated for about 12 hours or more, until the starch has been degenerated to a point where its viscosity is from 24 to 26 at 9 to 1 when tested as above described. The percentages of reagents added may be varied somewhat to bring about the desired amount of degeneration. The starch glue base is then further treated with ¼% sodium peroxid and ½ to ¾% caustic potash, in solution as before, the addition being made slowly and with continual stirring to prevent the local bursting of the suspended starch particles, and the stirring continued for several hours until the viscosity of the starch is about —26— at 9 to 1 when tested as above described. Or the starch may be removed from the alkaline liquor and again suspended in 2 parts of water and ¼% of sodium peroxid and ¾% of caustic potash and the starch given a second treatment substantially like the first. In either case, the final viscosity of the starch is reduced to about —17— at 9 to 1.

The starch is finally removed from the alkaline liquor and dried and 100 pounds thereof suspended in 150 pounds of water and 16 pounds of caustic potash, dissolved in 48 pounds of water, added slowly with constant stirring, until the mixture is dissolved into glue.

Instead of degenerating the starch as above described, it may be degenerated by any other reagents or method or a starch of the proper viscosity selected, and then dissolved with the caustic potash as above described. If heat up to 150° F. is used in the dissolving step, the percentage of caustic potash used may be considerably reduced.

The resulting glue is very permanent, and in spite of the small quantity of water therein, is also very fluid and capable of ready application by a suitable brush for joint work. However, after being applied to the wood, it should be allowed to stand 15 or 20 minutes before very high pressure is applied.

From the above, it will be seen that by my invention, especially in its broader aspects, many glues containing a relatively large amount of water, or being very fluid, or both, are made commercially applicable and the disadvantages hereinbefore mentioned are substantially overcome. I have found that a gradual and at first low increase of pressure is in all cases equally good, if properly regulated, as will be apparent from the above examples, to anyone skilled in the art, after a few trials, and, in some cases, this method has the advantage of bringing all parts of the glued surfaces earlier into contact without exerting excessive pressure upon the mass of the glue. Hence, I desire to cover all modifications and forms coming within the language of the appended claims.

What I claim as new and desire to secure by Letters Patent, is:

1. In the improved process of gluing wood, the steps which consist in applying to wood a water containing glue made from a starchy carbohydrate base and allowing the glue to remain on the wood for a substantial time without material penetration of the glue into the wood and before completing the pressure of the glue into the superficial wood pores to permit a substantial part of the water in the glue on the wood to dry out of the glue before completing the pressure of the glue into

the superficial pores of the wood and then pressing the glue farther into the pores of the wood.

2. In the improved process of gluing wood, the steps which consist in applying to the wood a glue containing a starchy carbohydrate base and about four parts or more by weight of water and allowing a substantial part of the water in the glue on the wood to dry out without material penetration of the glue into the wood and before pressing the glue materially into the superficial pores of the wood, and then applying pressure to the glue joint to force the glue farther into the superficial pores of the wood and allowing the glue to further dry out under pressure.

3. In the improved process of gluing wood, the steps which consist in applying to the wood a glue containing a starchy carbohydrate base and water and allowing a substantial part of the water in the glue on the wood to dry out without material penetration of the glue into the wood and before pressing the glue materially into the pores of the wood and then applying pressure to the glue joint to force the glue farther into the pores of the wood and allowing the glue to further dry out under pressure.

4. In the improved process of gluing together layers of wood, the steps which consist in applying to one or both wood surfaces to be joined a glue containing a starchy carbohydrate base and water, then placing the wood surfaces to be joined in juxtaposition to one another and under a pressure of about 10 pounds per square inch or less for a period sufficient to permit a substantial part of the water to dry out of the glue and without material penetration of the glue into the wood and then increasing the pressure to about 100 pounds per square inch or more and allowing the glue to further dry out under such increased pressure.

5. In the improved process of gluing together layers of wood, the steps which consist in applying to one or both wood surfaces to be joined a glue containing a starchy carbohydrate base and water, then placing the wood surfaces to be joined in juxtaposition to one another and allowing a substantial part of the water in the glue on the wood to dry out of the glue without material penetration of the glue into the wood and before completing the pressure of the glue into the wood pores and then applying pressure to the glue joint to force the glue farther into the pores of the wood and allowing the glue to further dry out under pressure.

6. In the improved process of gluing wood, the steps which consist in applying to the wood a water containing glue and allowing a substantial part of the water in the glue on the wood to dry out of the glue without material penetration of the glue into the wood and before completing the pressure of the glue into the wood pores and then applying pressure to the glue joint to force the glue farther into the pores of the wood and allowing the glue to further dry out under pressure.

Signed at New York city, in the county of New York and State of New York this 15th day of January A. D. 1918.

WILLIAM M. GROSVENOR.

UNITED STATES PATENT OFFICE.

JULIUS B. B. STRYKER, OF LANSDALE, PENNSYLVANIA, ASSIGNOR TO PERKINS GLUE COMPANY, A CORPORATION OF PENNSYLVANIA.

ADHESIVE AND PROCESS FOR MAKING THE SAME.

1,299,809. Specification of Letters Patent. Patented Apr. 8, 1919.

No Drawing. Application filed July 18, 1917. Serial No. 175,410.

To all whom it may concern:

Be it known that I, JULIUS B. B. STRYKER, a citizen of the United States, and a resident of Landsdale, in the county of Montgomery and State of Pennsylvania, have invented certain new and useful Improvements in Adhesives and Processes for Making the Same, of which the following is a specification.

My invention relates to improvements in adhesives and processes of making the same, and more particularly to the making of vegetable adhesives capable of flowing through pipes and being spreadable by glue applying machinery and yet sufficiently cheap in cost so that they may be used for work where high-priced adhesives would be prohibitive. It is well known that a vegetable glue suitable for high class veneering purposes can be made from cassava starch by degenerating the starch by means of suitable chemicals to a proper point, and then dissolving the starch with about three parts of water or less, and a sufficient amount of caustic alkali to produce a glue having substantially the qualities of animal glue for furniture veneering. In making such a glue, however, the cost has been increased because of the use of relatively high grade starches and the expensive preliminary treatment or degenerating process through which, for various reasons, it is preferred to put the starch or most of it. For the securing together of wood layers in other classes of work, such as the joining of the layers of wood in box shocks, barrel heads, etc., no such high class joint is required. Also, owing to the cheap grade of this work, expensive glues are prohibitive. I find, however, that a vegetable glue can be made suitable for this work by using mainly, if not wholly, raw cassava starch with an increased amount of water and a suitable amount of caustic alkali, and the resulting adhesive will be spreadable by glue applying machinery in a practical way, and sufficiently fluid to flow through pipes, as is required in practical operation, and yet by the use mainly of raw starch and generally using a cheaper grade of starch and by the increase in the amount of water, the cost of the final adhesive is so low as to render it practicable for this cheaper class of work, provided a starch or starches of proper viscosity are selected and the amount of water used with them properly chosen, so that the body of the resulting glue is adapted for the purpose as described. While cassava starch gives on the whole the best results, yet other root starches may be used for the main portion of the starchy material.

In determining the viscosity of the raw and treated starches, I use what is known as the Perkins viscosimeter. Such Perkins viscosimeter consists of a small cup perforated with a small hole in its bottom and the viscosity is ascertained by placing this cup in the material and measuring the number of seconds it takes the cup to fill up through the bottom hole and sink by top overflow. Such a viscosimeter may be constructed of brass tubing 1.295 inches outside diameter, 0.012 inch thick, and 3 inches long, and having a flat brass bottom 0.080 inch thick soldered into the end having a round center hole 0.070 inch in diameter, the total weight being 39.63 grams, and all edges being made smooth removing practically no weight, the hole being polished until the cup placed quickly at its floating level in water at 60° F. floats upright and fills up to the point of sudden sinking by top overflow in 16 seconds. To measure the viscosity of starches with this viscosimeter, the dry starch, if raw, is mixed with 20 parts of water to one of starch and boiled for ten minutes with dry live steam at 100 pounds pressure, and tested for viscosity while hot, in the manner above described. When the viscosity of degenerated starches is being tested, the test is changed, using only 9 parts of water to 1 of starch. In measuring this viscosity, 350 grams of starch are mixed with 3150 cc. of cold water and 450 grams of steam condensed therein, and the same tested at 190° F.

Throughout this specification and the claims where I speak of the viscosity of starch at 20 to 1, I mean that the number of seconds it takes for the viscosimeter to sink in the manner above described in a hot mixture of the starch with 20 parts of water

boiled with dry live steam at 100 pounds pressure for 10 minutes, and similarly when I speak of viscosity at 9 to 1, I mean the number of seconds it takes for the viscosimeter to sink in a mixture of the starch and 9 parts of water to 1 part of starch which has been boiled with dry live steam at 100 pounds pressure for 10 minutes. Given the viscosity of a starch on the 20 to 1 scale it is very difficult to say what should be the corresponding starch on the 9 to 1 scale because those starches which are conveniently tested on the 20 to 1 scale produce such viscous solutions on the 9 to 1 scale that satisfactory measurements cannot be taken, and, vice versa those starches which are conveniently tested on the 9 to 1 scale produce such fluent mixtures on the 20 to 1 scale that satisfactory results are not given. Moreover the relative viscosities vary with the kind and condition of the starch employed, and the time elapsing after boiling up and before testing makes considerable differences when the more viscous starches are tested on the 9 to 1 scale. The following, however, will give a general idea of the relation of the two scales. A degenerated cassava starch having a viscosity of 22–23 at 20 to 1 showed a viscosity of 49–55 at 9 to 1. A relatively raw cassava starch having a viscosity of 36–37 at 20 to 1 showed a viscosity of 110–115 at 9 to 1. A raw cassava starch having a viscosity of 44–47 at 20 to 1 showed a viscosity of about 745 at 9 to 1. A degenerated cassava starch having a viscosity of about 68 at 9 to 1 showed a viscosity of about 24 at 20 to 1. Another cassava starch having a viscosity of 34–36 at 20 to 1 showed a viscosity of 180–270 at 9 to 1. A medium or low grade raw cassava starch showing a viscosity of 20 at 20 to 1 showed a viscosity of 47–55 at 9 to 1. A raw cornstarch having a viscosity of 25 at 20 to 1 was so heavy at 9 to 1 that no reading was possible and the same was also true of a certain potato starch having a viscosity of about 75 at 20 to 1, while a certain cassava starch having a viscosity about 75 at 20 to 1 showed a viscosity of about 127 at 9 to 1.

In order that those skilled in the art may more easily carry out the invention, I will give several examples of the process.

Example 1: 84 parts of raw cassava flour, having a viscosity at 20 to 1 of about 2[illegible] are mixed with 16 parts of treated cassava flour, the treated flour having a viscosity at 9 to 1 of about 40, and this mixture of starches is mixed with about 4 times its weight of water and then a 33⅓% solution of caustic soda is slowly added during agitation until the percentage of caustic soda added, based on the dry weight of the starches, amounts to about 8%. The agitation is continued until the mixture comes across from a milk suspension of starch in water to a homogeneous colloidal solut[illegible] of starch alkali and water capable flowing through pipes 2 inches in dia[illegible] ter and capable of being spread by g[illegible] spreading rolls or machinery. While percentage of caustic alkali used may varied, preferably about 12% of caustic kali or less should be used. Even less t[illegible] 8% may be used, but when the smaller p[illegible] centages of caustic, such as from 2 to 4% used, it is desirable to increase the temp[illegible] ture of the mixture. It is found that w[illegible] increase of temperature, the percentage caustic required to bring across the mass i[illegible] a fluid homogeneous adhesive is less. T[illegible] temperature, however, should not materi[illegible] exceed the bursting point of the sta[illegible] which is in the neighborhood of 165° F. making up relatively large batches, such batches of several hundred pounds, from to 25 minutes should be taken to add caustic soda, and preferably it should no[illegible] over 5 hours.

Example 2: 55 parts of raw cassava fl[illegible] having a viscosity at 20 to 1 of 90, are mi[illegible] with 45 parts of treated cassava havin[illegible] viscosity at 9 to 1 of 70, and this mixt[illegible] dissolved with about 4½ parts of water[illegible] caustic alkali, in the manner above descri[illegible]

Example 3: Raw cassava having a v[illegible] cosity at 20 to 1 of about 21 is mixed w[illegible] four times its weight of water and[illegible] starch dissolved in the water with alkali[illegible] the manner above described.

Example 4: 90 parts cassava flour, hav[illegible] a viscosity at 20 to 1 of about 115, is mi[illegible] with 10 parts of degenerated cassava fl[illegible] having a viscosity at 9 to 1 of about 85, [illegible] these starches dissolved in about six ti[illegible] their weight of water with alkali, in [illegible] manner above described.

Example 5: 60 parts cassava flour hav[illegible] a viscosity at 20 to 1 of about 21, are mi[illegible] with 40 parts of treated cassava flour hav[illegible] a viscosity at 9 to 1 of about 60, and the[illegible] sulting mixture dissolved with caustic s[illegible] in 3½ parts of water, in the manner ab[illegible] described.

Example 6: 80 parts of cassava flour h[illegible] ing a viscosity at 20 to 1 of about 45, [illegible] mixed with 20 parts of cornstarch havin[illegible] viscosity at 9 to 1 of about 20, and th[illegible] starches are dissolved in about four ti[illegible] their weight of water with caustic alkali[illegible] the manner above described.

Example 7: 70 parts of raw cassava fl[illegible] having a viscosity at 20 to 1 of about 35 [illegible] mixed with 30 parts of degenerated sta[illegible] having a viscosity at 9 to 1 of about 40, [illegible] these starches are dissolved in 5 times t[illegible] weight of water with caustic alkali, in [illegible] manner above described.

If higher than normal temperatures [illegible] used when bringing across the mixtures i[illegible] adhesive, the amount of water may so[illegible]

times be lessened somewhat, or starches of relatively higher viscosities may be used, or both.

It will be seen that in the above examples the starch used is either mostly or wholly raw starch having a viscosity of less than 150 at 20 to 1 and over 18 at 9 to 1, hence the cost of degenerating most if not all of the starch is eliminated. Furthermore, raw starches of relatively low viscosities are preferred, as those having a viscosity at 20 to 1 of about 60 or less, and over 18 at 9 to 1, and in general these are cheaper than those of the higher viscosities. The amount of water which may be used with various raw starches and mixtures is easily calculated. As will be seen from the above examples, with raw starches having a 20 to 1 viscosity of from 20 to 100 I use from about 4 to about 6 parts of water respectively, and with that portion comprising more degenerated starches having a 9 to 1 viscosity of from 40 to 100 I use from about 2 to about 4 parts of water respectively. By thus calculating the amount of water for each portion of starch in the batch according to its viscosity and adding the amounts together, the total amount of water for the whole batch or mixture of starches is obtained. While this forms a good working rule it will be understood that it does not have to be adhered to with mathematical accuracy and slight variations may be made without materially changing the result. The amount of caustic alkali which may be used may be varied considerably and depends largely on the temperature used. When the glue is mixed cold about 7% or 8% of caustic soda based on the weight of starch base may be used, but as much as 10% to 14% may be used if desired. It usually takes 7% to 8% however, to produce a thorough solution of the starch in a cold mixture. If the temperature of the batch be raised to about 140° F. it is found that the solution of the starch may be effected with about 3% of caustic soda. The cost per pound of finished adhesive is also decreased by using a greater amount of water than 3 parts. By combining all these various features, I find that a practical commercial adhesive can be obtained for joining wood layers in work where a high class joint is not required, and where the layers of wood being joined are relatively thick as compared with the thin veneers of regular furniture veneering. While in general cassava starch is preferred, yet other starches and particularly potato may be used on occasions where the cost of the same will warrant.

What I claim as new and desire to secure by Letters Patent is:

1. The process of making an adhesive which consists in taking a starch base containing substantially raw cassava starch and having a viscosity at 20 to 1 of about 60 or less and over 18 at 9 to 1, and mixing it with from 3½ to 6 times its weight of water and dissolving the starch in the water with caustic alkali to form a homogeneous colloidal adhesive of starch alkali and water, the amount of water being proportioned relatively to the viscosity of the starch base to produce an adhesive which will be spreadable by glue applying rolls and will flow through pipes two inches in diameter.

2. The process of making an adhesive which consists in mixing root starch having a viscosity of less than 150 at 20 to 1 and over 18 at 9 to 1, with a degenerated starch having a viscosity of about 80 or less at 9 to 1, and more than 18 at 9 to 1 and water, the amount of such raw starch being greater than the amount of degenerated starch and the amount of water being from 3 to 6 times the weight of the starches, and dissolving the starches in the water with caustic alkali to form a homogeneous colloidal adhesive of starch alkali and water, the amount of water being proportioned relatively to the viscosity of the starches to produce an adhesive which will be spreadable by glue applying machinery and will flow through pipes two inches in diameter.

3. The process of making an adhesive which consists in taking a starch base containing substantially raw root starch and having a viscosity at 20 to 1 of about 60 or less and over 18 at 9 to 1, and mixing it with from 3 to 6 times its weight of water and dissolving the starch in the water by adding caustic alkali to form a homogeneous colloidal adhesive of starch alkali and water, the addition of the caustic alkali taking less than 5 hours, and the amount of water being proportioned relatively to the viscosity of the starch base, to produce an adhesive which will be spreadable by glue applying rolls and will flow through pipes two inches in diameter.

4. The process of making an adhesive which consists in mixing raw cassava starch having a viscosity of about 60 or less at 20 to 1 and over 18 at 9 to 1, with a starch of less viscosity, and water, the amount of raw starch being greater than the amount of the other starch and the amount of water being from 3 to 6 times the weight of the starches, and dissolving the starches in the water with caustic alkali to form a homogeneous colloidal adhesive of starch alkali and water, the amount of water being proportioned relatively to the viscosity of the starches to produce an adhesive which will be spreadable by glue applying machinery and will flow through pipes two inches in diameter.

5. The process of making an adhesive which consists in mixing about 85% of raw cassava starch having a viscosity of about 60 or less at 20 to 1 and over 18 at 9 to 1,

with about 15% degenerated cassava starch having a viscosity of about 80 or less at 9 to 1 and more than 18 at 9 to 1, with water, the amount of water being about 4 times the weight of the starches, and dissolving the starches in the water with less than 12% of caustic alkali based on the dry weight of the starches, to form a homogeneous colloidal adhesive of starch alkali and water which will flow through pipes two inches in diameter and be spreadable by glue spreading machinery.

6. The process of making an adhesive which consists in taking a starch base containing substantially raw cassava starch and having a viscosity at 20 to 1 of about 60 or less and over 18 at 9 to 1, and mixing it with from 3½ to 6 times its weight of water and dissolving the starch in the water with caustic alkali and heat not materially above the bursting temperature of the starch to form a homogeneous collodial adhesive of starch alkali and water, the amount of water being proportioned relatively to the viscosity of the starch base to produce an adhesive which will be spreadable by glue applying rolls and will flow through pipes two inches in diameter.

7. The process of making an adhesive which consists in mixing raw starch having a viscosity of less than 150 at 20 to 1 and over 18 at 9 to 1, with a degenerated starch having a viscosity of about 80 or less at 9 to 1 and more than 18 at 9 to 1, and water, the amount of such raw starch being greater than the amount of degenerated starch and the amount of water being from 3 to 6 times the weight of the starches, and dissolving the starches in the water with caustic alkali and heat below the bursting temperature of the starch to form a homogeneous collodial adhesive of starch alkali and water, the amount of water being proportioned relatively to the viscosity of the starches to produce an adhesive which will be spreadable by glue applying machinery and will flow through pipes two inches in diameter.

8. The process of making an adhesive which consists in mixing raw cassava starch having a viscosity of about 60 or less at 20 to 1 and over 18 at 9 to 1, with a starch of less viscosity, and water, the amount of raw starch being greater than the amount of the other starch and the amount of water being from 3 to 6 times the weight of the starches and dissolving the starches in the water with caustic alkali and heat below the bursting temperature of the starch to form a homogeneous colloidal adhesive of starch alkali and water, the amount of water being proportioned relatively to the viscosity of the starches to produce an adhesive which will be spreadable by glue applying machinery and will flow through pipes two inches in diameter.

9. The process of making an adhesive which consists in mixing about 85% of raw cassava starch having a viscosity of about 60 or less at 20 to 1 and over 18 at 9 to 1, with about 15% degenerated cassava starch having a viscosity of about 80 or less at 9 to 1 and more than 18 at 9 to 1, with water, the amount of water being about 4 times the weight of the starches, and dissolving the starches in the water with less than 12% of caustic alkali based on the dry weight of the starches and heat below the bursting temperature of the starches, to form a homogeneous colloidal adhesive of starch alkali and water which will flow through pipes two inches in diameter and be spreadable by glue spreading machinery.

10. The improved vegetable adhesive containing substantially raw cassava starch and having a viscosity at 20 to 1 of about 60 or less and over 18 at 9 to 1, dissolved in from 3½ to 6 times its weight of water with caustic alkali, the adhesive being homogeneous, colloidal and spreadable by glue applying rolls and capable of flowing through pipes two inches in diameter.

11. The improved vegetable adhesive comprising a mixture of starch having a viscosity of less than 150 at 20 to 1 and over 18 at 9 to 1, and a degenerated starch having a viscosity of about 80 or less at 9 to 1 and more than 18 at 9 to 1, dissolved in from 3 to 6 times its weight of water with caustic alkali, the adhesive being homogeneous, colloidal and spreadable by glue applying rolls and capable of flowing through pipes two inches in diameter.

12. The improved vegetable adhesive comprising a mixture of cassava starch having a viscosity of about 60 or less at 20 to 1 and over 18 at 9 to 1 and a starch having less viscosity than the first mentioned starch dissolved in from 3 to 6 times its weight of water with alkali, the adhesive being homogeneous, colloidal and spreadable by glue applying rolls and capable of flowing through pipes two inches in diameter.

13. The improved vegetable adhesive which comprises a mixture of about 85% of raw cassava starch having a viscosity of about 60 or less at 20 to 1 and over 18 at 9 to 1, and about 15% of degenerated starch having a viscosity of about 80 at 9 to 1 and more than 18 at 9 to 1, dissolved with about 4 times its weight of water and less than 12% of caustic alkali, the adhesive being homogeneous, colloidal and spreadable by glue applying rolls and capable of flowing through pipes two inches in diameter.

14. The improved vegetable adhesive comprising a mixture of a substantially raw starch having a viscosity of less than 150 at 20 to 1 and over 18 at 9 to 1, and a degenerated starch having a viscosity of about 80 or less at 9 to 1 and more than 18 at 9 to 1

the amount of raw starch being greater than the amount of degenerated starch, dissolved in from 3 to 6 times its weight of water with caustic alkali, the adhesive being homogeneous, colloidal and spreadable by glue applying rolls and capable of flowing through pipes two inches in diameter.

Signed at Lansdale in the county of Montgomery and State of Pennsylvania, this 14th day of June, A. D. 1917.

JULIUS B. B. STRYKER.

Witnesses:
G. H. LOVE,
I. E. MOORE.

Office Supreme Court, U. S.
FILED
JUN 8 1927
CHARLES ELMORE CROPLEY
CLERK

No. 285

IN THE

Supreme Court of the United States

OCTOBER TERM, 1926.

HOLLAND FURNITURE COMPANY,
Petitioner,

vs.

PERKINS GLUE COMPANY,
Respondent.

PETITION FOR WRIT OF CERTIORARI TO THE UNITED STATES CIRCUIT COURT OF APPEALS FOR THE SIXTH CIRCUIT.

WILLIAM H. DAVIS,
JAMES A. WATSON,
Counsel.

June, 1927.

Gallo & Ackerman, Inc., 6 Church St. & 107 Liberty St., Phones Rector 7257-8.

PETITION FOR A WRIT OF CERTIORARI

IN THE

Supreme Court of the United States

OCTOBER TERM, 1926.

HOLLAND FURNITURE COMPANY,
Petitioner,

vs.

PERKINS GLUE COMPANY,
Respondent.

PETITION FOR WRIT OF CERTIORARI TO THE UNITED STATES CIRCUIT COURT OF APPEALS FOR THE SIXTH CIRCUIT.

To the Honorable the Chief Justice and Associate Justices of the Supreme Court of the United States:

Your petitioner, Holland Furniture Company, respectfully prays for a Writ of Certiorari to review the decision of the Circuit Court of Appeals for the Sixth Circuit in the above-entitled case.

Grounds for Petition.

A conflict, on identical issues and practically identical records, exists between the Court of Appeals for the Sixth Circuit and the Courts of Appeals for the Second and Seventh Circuits as to the construction of Perkins Reissue Patent No. 13,436.

This is explicitly stated in the opinion of the Court of Appeals in the instant case (R., 625):

> "With the greatest deference to the opinion of the Second and Seventh Circuits, we find ourselves unable to concur with them."

The furniture industry of the country is in a state of uncertainty because of this conflict. The patent in suit claims a furniture glue of which millions of pounds are sold each year for veneering (279 Fed., 459). Since the first case in 1915 over fifteen suits have been brought and all of them against furniture manufacturers. Since the decision in the instant case, two suits have been brought in the Third Circuit and two in the Seventh Circuit and one in the Second Circuit against furniture manufacturers. The Perkins Glue Company openly threatens to bring more.

Unless the conflict of opinion is determined the litigation will be indefinitely prolonged.

History of Litigation.

This is reviewed more at length in the opinion in the instant case (R., 610).

Four times has the patent been before a Circuit Court of Appeals—twice in the Seventh Circuit, once in the Second Circuit, and the instant case in the Sixth Circuit.

Of the fifteen or more suits started only the following have been reported:

The first case, Perkins Glue Company vs. Solva Waterproof Glue Company, was decided by the District Court in 1915 (223 Fed., 792), on appeal by the Court of Appeals for the Seventh Circuit in 1918 (251 Fed., 64). Suits were then brought against the Holland Furniture Company (the instant case) and the West Michigan Furniture Company and Hood in the Sixth Circuit (1920;

279 Fed., 454); the Wisconsin Chair Company and Gould Manufacturing Company in the Seventh Circuit (1922; 280 Fed., 728; on appeal 1923; 292 Fed., 596); and the Standard Furniture Company (1922; 279 Fed., 458; on appeal 1923; 287 Fed., 109), and Crandall Panel Co., Inc. (1923; 294 Fed., 135) in the Second Circuit.

Petitions by plaintiff (respondent here) for writs of certiorari were denied by this Court in the Standard Furniture Company case (262 U. S., 752) and in the Wisconsin Chair Company and Gould Manufacturing Company cases (263 U. S., 718). Those cases presented no conflict—the Second and Seventh Circuits are in agreement. In those cases the petitioner (now respondent) stressed the importance of the questions to the furniture veneer industry.

The Nature of the Cases.

The patent in suit contained five classes of claim based on a glue and a method for making it.

In the first case, the Solva case, the Court of Appeals for the Seventh Circuit held certain claims valid and others invalid. After a decree was entered the plaintiff filed in the Patent Office a disclaimer of certain aspects which it had previously claimed. Since then (1919) the contest has centered around the meaning of the Solva opinion and the meaning of the disclaimer.

Subsequent to the Solva case, the Circuit Court of Appeals for the Seventh Circuit affirmed in the Gould case its previous opinion in the Solva case and also held plaintiff bound by its disclaimer.

The Circuit Court of Appeals for the Second Circuit did likewise.

The Circuit Court of Appeals for the Sixth Circuit in the instant case now differs not only with the Second Circuit but with both opinions in the Seventh Circuit. In its opinion it said:

> "With the greatest deference to the opinions of the Second and Seventh Circuits, we find ourselves unable to concur with them. Even if we could agree that their interpretation of the intent of the Court in the original Solva opinion was right, we would still think that we ought not to reach the same result as they did because in that event we would feel constrained not to follow the Solva decision."

The records in the Gould case and the instant case are practically identical. The same manufacturer supplied the glue to both defendants and conducted the defense of both cases. The issues were the same. It was on the opinion in the Gould case that Sessions, D. J., reversed his previous interlocutory decree in the instant case and entered a final decree for defendant.

Conclusion.

On this state of facts we pray that the Court issue its Writ of Certiorari to the Circuit Court of Appeals for the Sixth Circuit to bring the record of the proceedings in this suit before this Court for its consideration and that petitioner be granted such other and further relief as this Court may deem appropriate.

Respectfully,

HOLLAND FURNITURE COMPANY,
By WILLIAM H. DAVIS,
JAMES A. WATSON,
Counsel.

Dated, New York City, June 6, 1927.

I hereby certify that I am of counsel for the petitioner herein, Holland Furniture Company; that I have prepared the foregoing petition in accordance with the request of said petitioner; that I firmly believe that the allegations contained in said petition are true; and that said petition is not made for purposes of delay, but is, in my opinion, well founded in law and in fact and should be granted.

WILLIAM H. DAVIS,
Counsel for Petitioner.

Dated, New York City, June 6, 1927.

Office Supreme Court, U. S.
FILED
FEB 25 1928
CHARLES ELMORE CROPLEY
CLERK

IN THE

Supreme Court of the United States

OCTOBER TERM, 1927.

No. 285.

HOLLAND FURNITURE COMPANY,

Petitioner,

vs.

PERKINS GLUE COMPANY.

BRIEF FOR PETITIONER.

CHARLES E. HUGHES,
WILLIAM H. DAVIS,
JAMES A. WATSON,
R. MORTON ADAMS,
of Counsel.

February 20, 1928.

GALLO & ACKERMAN, Inc., 142 Liberty Street, 'Phones—Rector 7257-8.

SYNOPTICAL INDEX.

	PAGE
Jurisdiction of the Court	1
Brief Statement of the Case	2
Summary Statement of Facts	4
The Issue	7
Argument	8
(1) The Art of Making Adhesives (Glues, Mucilages and Pastes) by Dissolving Starch in Solutions of Caustic Alkali	8
1. Glues Made by Dissolving Ordinary Untreated Starch in Solutions of Caustic Alkali (Gerard, Dornemann and Marsden)	8
2. Weaker Adhesives Made from Starch That Has Been Treated (degenerated) to Reduce Its Water-Absorptive Properties, and is Then Dissolved in Caustic Solution	12
(2) Perkins' Work	14
(3) The Disclosure of Plaintiff's Reissue Patent No. 13,436 of July 2, 1912	16
The First Step of the Patent	19
The Surrender and Reissue of the Original Patent	22

PAGE

The Second Step of the Patent 23
The Reference to Untreated Cassava Glue-Base in the Patent 24

(4) Defendant's Practice 26

The Prior Litigation and the Representations Advanced by Plaintiff Therein 27

Solva Case 28
The Final Decree in the Solva Case 35
Plaintiff Acquiesced 41

The Disclaimer 41
Further Enforcement of Plaintiff's Patent Rights... 48
The Hood-Wright and West Michigan Cases 48
The Case at Bar in the District Court 50
The Standard Case in the 2nd Circuit 53
The Gould-Wisconsin Chair Cases in the 7th Circuit 54
The Opinion of the Court of Appeals in The Case at Bar 56
Conclusion 78

INDEX OF CASES.

PAGES

American, etc., Co. vs. Mesta, etc., Co., 18 Fed. (2d), 538 21
Atlantic, etc., Co. vs. Hulings, 21 Fed., 519 47
Bene vs. Jeantet, 129 U. S., 683 21
Bracewell vs. Passaic Print Works, 107 Fed., 467 47
Cochrane vs. Badische, etc., Fabrik, 111 U. S., 293 21
Dunbar vs. Meyers, 94 U. S., 187 47
Eagleton Mfg. Co. vs. West, etc., Mfg. Co., 111 U. S., 490 25
Giant Powder Co. vs. California Powder Works, 98 U. S., 126 58
Hailes vs. Albany Stove Co., 123 U. S., 582 44
Matheson vs. Campbell, 78 Fed., 910 21
Michigan, etc., Co. vs. Consolidated, etc., Co., 67 Fed., 121 25
Minerals Separation, Ltd., vs. Butte & Superior, etc., Co., 250 U. S., 336 ..... 21, 27
O'Reilly vs. Morse, 15 How., 62, 112 21
Packing Co. Cases, 105 U. S., 566 58
Perkins Glue Co. vs. Gould Mfg. Co. and Wisconsin Chair Co., 280 Fed., 728; 292 Fed., 596; 263 U. S., 718 ..... 4, 54
Perkins Glue Co. vs. Hood-Wright and West Michigan Furniture Co., 279 Fed., 454 48
Perkins Glue Co. vs. Solva Waterproof Glue Co., 223 Fed., 792; 251 Fed., 64 ..... 3, 13, 24, 28, et seq.
Perkins Glue Co. vs. Standard Furniture Co., 279 Fed., 458; 287 Fed., 109 ..... 3, 4, 53
Railway Co. vs. Sayles, 97 U. S., 554 25
Steward vs. American Lava Co., 215 U. S., 161 25
The Incandescent Lamp Patent, 159 U. S., 465 21
Tyler vs. The City of Boston, 7 Wall., 327 21
Western Electric Co. vs. Ansonia, 114 U. S., 447 58

PRIOR CASES INVOLVING THE PERKINS PATENT.

Solva Litigation:

Decision of the District Court, 223 Fed., 792 (1915).
Decision of the Court of Appeals, 251 Fed., 64 (C. C. A., 7, 1918).

The Hood-Wright and West Michigan cases, 279 Fed., 454 (1920).

Holland Furniture Co., District Court, 279 Fed., 457 (1921), on appeal, 18 Fed. (2nd), 387.

Standard Furniture Co. case, 279 Fed., 458 (Feb., 1922); 287 Fed., 109 (C. C. A., 2, Jan., 1923), certiorari denied, 262 U. S., 752.

Gould Mfg. and Wisconsin Chair cases, 280 Fed., 728 (May, 1922); 292 Fed., 596 (C. C. A., 7, June, 1923), certiorari denied, 263 U. S., 718.

Crandall Panel Co., 294 Fed., 135 (March, 1923).

IN THE

Supreme Court of the United States

OCTOBER TERM—1927.

No. 285.

HOLLAND FURNITURE COMPANY,

Petitioner,

vs.

PERKINS GLUE COMPANY,

Respondent.

BRIEF FOR PETITIONER.

Jurisdiction of the Court.

This case comes from the Circuit Court of Appeals of the Sixth Circuit to this Court on a writ of certiorari granted October 17, 1927, on petition of defendant below because of conflict on a question of infringement of reissued patent No. 13,436* between the Court of Appeals of the Sixth Circuit (R., 645), which held the patent infringed, and the Court of Appeals of the Seventh Circuit (292 Fed., 596, June 7, 1923) and the Court of Appeals of the Second Circuit (287 Fed., 109, Jan. 2, 1923),

*The original patent No. 1,020,655 (R., 1188) was issued on March 19, 1912, on application filed November 2, 1908. The application for reissue was filed May 17, 1912.

both of which held the patent not infringed, by the same product. The decree was entered in the court below on March 18, 1927 (R., 645). Opinion, 18 Fed. (2nd), 387.

BRIEF STATEMENT OF THE CASE.

Plaintiff's* patent is for a starch glue and a method of making it (R., 247). Only the product claims for the glue (claims 28, 30 and 31)** are charged to be infringed.

Defendant says that it does not use the patented glue and stands on the following propositions:

1. In the highly developed art of making glue by dissolving starch in a solution of caustic alkali, the thing patented is a particular improvement, characterized by the asserted novelty that for the glue-base a starch is chosen which has a water-absorptive property within a defined range—below the high water-absorption of ordinary untreated (raw) starch, so that to render amply fluid the finished glue comparatively little water

---

*Your petitioner was defendant in the District Court and appellee in the Court of Appeals of the Sixth Circuit. Respondent was plaintiff in the District Court and appellant in the Court of Appeals. The parties will be referred to as plaintiff and defendant in this brief.

**These three claims read as follows:

"28. A glue comprising cassava carbohydrate rendered semi-fluid by digestion and having substantially the properties of animal glue.

30. A wood and fiber glue formed of a starchy carbohydrate or its equivalent by union therewith of about 3 parts or less by weight of water and alkali metal hydroxid.

31. A wood and fiber glue containing amylaceous material as a base dissolved without acid in about three parts of water or less, and being viscous, semi-fluid and unjellified."

will have to be added; and yet above that of soluble starch or dextrine so that the "tack," adhesiveness and cohesiveness of the glue suffers no measurable detriment.

2. Defendant has chosen for its glue-base an ordinary untreated starch having high water-absorptive properties above the defined range; and makes a correspondingly heavier glue, not the glue of the patent.

3. The apparently broad product claims sued on must be restricted to glue made from a starch having reduced water-absorptiveness within the range measured by the tests of the patent, and must exclude defendant's glue made from starch of higher water-absorptiveness (1) because the thing patented was glue made from starch lying within that range; (2) because prior patents to Gerard, to Dornemann, and to Marsden disclose starch glue made, like defendant's, from the more highly water-absorptive untreated starches; (3) because glue made from such high water-absorptive untreated starches was publicly used at Poplar Bluff, Missouri, for some three years before application for the Perkins' patent; (4) because the claims here in issue were sustained by the Court of Appeals of the Seventh Circuit in the *Solva case* in the year 1918 only by reading into them, on plaintiff's own representations, the specified limited range of water-absorptiveness to save them from anticipation by the prior patents and the Poplar Bluff prior use; and (5) because at the end of the *Solva* litigation plaintiff disclaimed from the patent all glue made from starch by dissolving it in an alkaline solution containing not more than three parts of water, except only glues so made from starches of which the water-absorptive properties had been reduced to within the specified range.

Defendant's position was sustained by the Court of Appeals of the Second Circuit in the *Standard Furni-*

ture Co. case (287 Fed., 109, January 2, 1923) and by the Court of Appeals of the Seventh Circuit in the *Wisconsin Chair case* (292 Fed., 596, June 7, 1923) and was denied by the Court of Appeals of the Sixth Circuit on April 2, 1927 (R., 645), in the case at bar.

Summary Statement of Facts.

(1) In the industrial manufacture during the last fifty years of starch glues and mucilages by dissolving the starch (glue-base) in a solution of caustic alkali, all grades of starch, from the highest grade (most water-absorptive) untreated (raw) starch to the wholly converted (completely degenerated) soluble starches and dextrines, have been used. For high strength glues, the high water-absorptive cassava (tapioca) and potato starches, and for lower grade products, the less water-absorptive corn and wheat starches have been chosen. The water-absorptiveness of starch has been reduced and regulated by chemical treatment, commonly referred to as "conversion" and in this record frequently referred to as "degeneration." Conversion or degeneration also occurs in nature by over-ripening of the vegetable substances from which the starch is extracted, or as a result of treatment during the extraction, or by fermentation after extraction. Conversion (degeneration), by decreasing the water-absorptiveness of the starch (glue-base), increases the fluidity of the finished glue made with a given amount of water. Conversion of the glue-base to the soluble stage largely decreases the adhesiveness of the finished glue or mucilage and is to be avoided if a strong glue is wanted; it is desirable only in mucilages of the common envelope or postage stamp variety, easily soluble in water. When starch glue is used for sizing, the manifold industrial applications of sizing have demanded starch glues of all degrees of fluidity, regulated by the

simple expedient of adjusting the amount of water to the particular starch (glue-base) employed—thinning the glue by the addition of water, or thickening it by the addition of more of the starch. The strength of the caustic alkali solution has also been left to the judgment of the glue maker. Too much alkali may stain or injure the material to which the glue is applied; the dissolving of the glue in the alkaline solution may be done in the cold, or the effect of a lesser amount of caustic may be increased by heat applied during the dissolving operation.

(2) Perkins, the patentee of plaintiff's reissued patent (granted on an application filed November 2, 1908) was a maker of starch adhesives, and had from 1905 been selling to Brooklyn Cooperage Co., of Poplar Bluff, Mo., for making glue to glue together the flat wooden pieces of barrel heads, both "heavy body" (highly water-absorptive) and "light body" (degenerated low water-absorptive) starches, and he had found that the "heavy body" untreated starches, when dissolved in a caustic alkali solution containing the small quantity of water commonly used with animal glues in woodworking (not to exceed three parts by weight of water to one of dry glue), produced a jellylike and tough glue, too thick for easy application by machinery. For the rough work of barrel heads, the glue made from the starch supplied by Perkins was used continuously at Poplar Bluff from 1905 on; but the "heavy body" glue tended to break the mixing machines, did not spread easily in the roll spreaders,* and required an amount of water that in-

*The general type of mixing machines used may be understood from the Perkins patent No. 1,109,144 (R., 311) and the general type of roll spreaders may be understood from the Perkins patent No. 1,238,810 (R., 317). These patents show machines developed to handle the Perkins glue, which, notwithstanding the increased fluidity resulting from Perkins' patented choice of starting material, was still substantially heavier than animal glue.

creased the difficulty and time of drying (R., 681). At some time during the two years prior to November 2, 1908 (as plaintiff contends and as may be admitted for the purpose of this case), Perkins succeeded in working out a starch glue that satisfied his requirements for the more refined practice of furniture veneering, and that glue is the subject-matter of his patent.

(3) The gist of Perkins' invention, and the thing patented, was the choice of a starch glue-base degenerated to within a specified range, such as would produce, when dissolved in a caustic alkali solution containing the amount of water commonly used with animal glue in wood veneering (not to exceed three parts by weight of water to one part of dry glue), a resulting glue of ample fluidity for easy application and yet without substantially impaired strength—"tack," adhesiveness and cohesiveness—as compared with the heavier glue made from untreated high water-absorptive starch.

In the patent a known process (acid treatment) of chemical degeneration was described, and the patent states just how far to carry the process and just where to stop it, to produce a glue-base having its water-absorptive properties reduced far enough to give the desired fluidity and yet not far enough to seriously impair its strength. The particular chemical *process* of degeneration was neither novel nor important; only the *degree* of degeneration was essentially involved in the patentee's purpose. It was stated that other known processes of chemical degeneration might be used and, by amendment during the prosecution of the application, that even certain grades of untreated cassava and other starches might be found that would answer the purpose. To guide the user in that wide field of choice the patentee pointed out

how by a scientifically accurate test to determine whether a particular starch of reduced water-absorptiveness (whether reduced by artificial treatment or by natural processes) lay within that particular range of water-absorptiveness that would serve as a base for his glue. That test (R., 249-50; Pat., p. 3, line 121, to p. 4, line 33) was to dissolve the starch in nine parts of water at 100 pounds steam pressure and measure its viscosity while hot. If the measured viscosity did not exceed that of water (when measured with a particular described measuring instrument—the "Perkins viscosimeter"), the starch had been reduced too far—to soluble starch—and was not a suitable glue-base because the resulting glue would be too weak. If the so measured viscosity exceeded three times that of water, the water-absorptiveness of the starch had not been reduced far enough and the resulting glue would be too thick, jellylike and tough. Starch lying within the chosen range is further described, with reference to its high limit of water-absorptiveness, by saying that the water-absorptiveness should be reduced to a point where the base, if mixed with from two to three parts of water and heated to 170° F., would result in a syrupy condition instead of a thick jellylike mass (R., 250, Pat., p. 4, line 74 to line 81).

(4) It is admitted that defendant here does not use a starch having water-absorptive properties within the range measured by the tests of the patent. It uses an ordinary commercial untreated high water-absorptive cassava starch, with continuously operated and more powerful mixing machines that handle the glue notwithstanding its heavy rubbery toughness (R., 51, 59-60).

The Issue.

The issue, therefore, is whether a woodworking glue, made by dissolving ordinary starch having high water-absorptive properties (above the range measured by the

stated tests of the patent) in an alkaline solution with three parts or less by weight of water to one part of dry starch, is within the monopoly of the patent.

ARGUMENT.

The question is a quantitative one. What degree of water-absorptiveness in the starch base characterizes the patentee's invention? Where are the metes and bounds of the patented monopoly drawn? Answers to these questions are to be looked for within the four corners of the reissued patent. The specification of the patent, addressed to men skilled in the art, uses terms of art and makes references to known practices such that a summary review of the prior art will give light to illuminate the disclosure.

(1) The Art of Making Adhesives (Glues, Mucilages and Pastes) by Dissolving Starch in Solutions of Caustic Alkali.

1. *Glues made by dissolving ordinary untreated starch in solutions of caustic alkali* (*Gerard, Dornemann and Marsden.*)

Dissolving untreated starch in a solution of caustic alkali to make strong glue was known and practiced as early as 1874. On June 30th of that year H. Gerard patented in Belgium (patent No. 34,869—R., 383) that process and the product of it, which product he named "apparatine." He said:

> "Any starches, feculas, meals, pulps of tubers and roots, may be transformed into apparatine by placing them in the presence of an alkali or alkaline salt. It is, however, more convenient, in the manufacture on a large scale, to use potato starch exclusively, and to treat it with caustic lye of potash or soda. The

materials named may be mixed in any proportion, but in order to obtain an industrial and commercial product it is necessary not to depart too much from the following proportions which experience has caused me to recognize as the best. The operation may take place at high or low temperature, under pressure or in a vacuum, the result is always the same.

Composition of apparatine by parts and by hundredths:

	Parts	Hundredths
Water	100	76.00
Potato fecula	20	16.00
25-degree potash or soda lye	10	8.00
Total	130	100.00

The fecula is first poured into the water, which is constantly stirred to keep it in suspension. The lye is then added while the stirring continues. After a few moments the mass, which was milky, suddenly becomes clear and sets to a very thick jelly, which must be agitated with energy. This operation only takes a few minutes, depending on the quantity worked upon. Its termination is recognized by there not remaining the least cloud in the mass. Experience taught me that the quality of the product improves as the energy of the stirring increases. I therefore expect to work the stirring by means of strong mechanical apparatus driven by steam. This apparatus does not present anything special and is not worth describing.*

*This description of the transformation of a milk of starch into a transparent mass in the presence of a solution of caustic alkali, when agitated with energy, is the process referred to in the record as "coming across." It is described in substantially the same language in the Perkins reissued patent (R., 248-249, Pat., p. 2, line 121, to p. 3, line 36).

Apparatine thus manufactured is a colorless, transparent, odorless substance of slightly alkaline taste, very viscous and ropy, and of a considerable adhesive power only to be compared to that of joiner's glue (*colle forte*). Exposed to air, it will only dry without decomposing or spoiling and without ever giving off any odor. Kept boiling for a long time, even until completely dried, it greatly thickens and it swells, but acts in the same way. Dried in thin plates, it shows the pliability and toughness of horn, without its fragility, for a sheet may be folded and refolded several times, without breaking it.

* * * * * * * *

To sum up, I therefore claim as my property: (1) The introduction into the industries of a product of science alone which has thus far remained without application. (2) The industrial manufacture of this new product. (3) Its application to the sizing of fabrics.

Incidentally, apparatine may advantageously replace gums, glues and gelatines in all their uses. It may also be successfully used as a thickening agent in tissue printing, and it further succeeds remarkably well in preventing the formation of scale in boilers. In a word, its applications are manifold, but the chief and most important of them is that as a sizing for fabrics."

This material—apparatine—is again described in Encyclopedie Roret (R., 273, and Miner, R., 194, 195) and again in the "Chemical Technical Pocket Manual of Recipes for the Entire Wood Industry," edited by William Schmidt, Berlin, 1882 (R., 390-392, and Walker, R., ~~356-358~~ 379-3). The author says that his manual is made up of prescriptions selected from technological journals by

'practically testing them and compiling the best in a unified book for the purposes of the wood industry" (R., 391).

On December 11, 1893, there was patented to R. J. Dornemann (French patent No. 232,781, R., 387-389), "A new industrial process for manufacturing glues from starches and their applications." For the glue-base, Dornemann took "the fecula of potatoes, of manioc (cassava), or another," and mixed it "with the quantity of water needed to turn it into a kind of milk without lumps in it." To the liquid mixture thus obtained he added with power stirring "an alkali (preferably caustic) potassium or sodium in the proportion of 20 to 30 kg. for every 100 kg. of fecula used." He said, "By using caustic potash or soda, an alkaline glue is obtained which can be put to all uses where the alkaline state is not harmful" (R., 389). If a non-alkaline glue was desired the alkali might be subjected to a supplementary neutralization by adding acid (R., 389). For certain applications, as, for example, when the glue was to be used for sizing (Grosvenor, R., 69, 375), he might further add certain inert substances giving more body to the glue. He said:

> "In sum, I claim as my invention and my exclusive property the new industrial process which I have here described for the manufacture of starch glues—with the special working (mixing) devices I have indicated; the supplementary operations provided for obtaining alkaline, neutral or acid reaction—or for increasing the consistence (body) of the manufactured product and lastly the numerous applications of the glues thus prepared, which may be used under the same conditions as well known adhesives, glues or sizes, producing much more energetic and durable effects."

The making of glue according to this patent by modern machinery is described by defendant's expert Walker (R., 380-382).

The U. S. patent to Marsden, No. 376,445, of 1888 (R., 254), disclosed the making of a similar product from raw starch. It differentiates from the Gerard patent only in the fact that Marsden, to avoid shipping water, mixes the alkali and the starch together and ships it as a dry flour; to be dissolved in water by the user to make "a paste which may be thinned by the addition of water or thickened by the addition of more of the alkali and flour" (R., 254, lines 39-41).

2. *Weaker adhesives made from starch that has been treated (degenerated) to reduce its water-absorptive properties, and is then dissolved in caustic solution.*

Where weaker starch adhesives are wanted, it has been the practice for many years to subject the starch base to a chemical process of conversion (degeneration) to reduce the water-absorptive properties toward or to the state of soluble starch or dextrine. It will be sufficient here to refer to the patents to Gerson & Sachse and to Higgins.

In 1897 Charles M. Higgins, the well-known Brooklyn manufacturer of library pastes and mucilages, patented certain improvements in the manufacture of starch pastes (U. S. patent No. 579,827, R., 256), wherein he subjected the starch to a preliminary chemical treatment to convert or degenerate it. The patent displays (R., 259, line 131 to p. 260, line 28) a thorough-going understanding of the progressive decrease of the water-absorptiveness of the starch as the chemical treatment proceeds, and a realization of the detrimental effect upon the strength of the resultant adhesive if degeneration is carried to the soluble stage. Higgins, however, for his particular purpose, carried the conversion of the starch further than

is contemplated in the Perkins reissued patent (Miner, R., 190).

On January 13, 1906, Gerson & Sachse patented in Germany (Patent No. 167,275, R., 275) a process for the preparation of a dry base for vegetable mucilage or glue by degenerating the starch with oxidizing agents in the presence of an alkali. This process corresponds to the alkali process of degeneration used commercially by plaintiff (see post, p. 28). It was carried to the same point of degeneration as in the Perkins reissued patent "between natural starch and the so-called soluble starch" (Miner, R., 181).*

In the case at bar (R., 651), the Court of Appeals said:

> "In former litigation it has been held that Gerson and Sachse, by their German patent, had disclosed substantially Perkins' first (degenerative) step and his resulting glue base. Perkins acquiesced in this result and disclaimed wholly those claims which covered the first step process or the glue base product."

In the many cases in which the Perkins reissued patent has been litigated, reference has been made to many other patents and publications relating to the making of glues, mucilages and pastes from starch previously converted to various degrees; but the foregoing are the most important ones and give an adequate picture of the general state of the art.

---

*It was because of this patent that the "first step" or base process and product claims of the Perkins reissued patent were held to be invalid by the Court of Appeals of the Seventh Circuit in the Solva case in January, 1918 (251 Fed., 66).

(2) Perkins' Work.

The facts of Mr. Perkins' work are set forth at great length in the record (R., 667-1039). The evidence consists of contemporaneous correspondence, reports and transactions and the testimony of witnesses. The most illuminating testimony is that of one of the plaintiff's witnesses, Mr. Stryker, who is vice-president of the Perkins Glue Company. His testimony is contained in the record at pages 737-780.

Perkins began his work in the development of vegetable glue for veneering in 1905 at Poplar Bluff, Missouri. The plant at Poplar Bluff manufactured barrel heads by securing together (i. e., veneering) several layers of wood. Perkins developed a starch glue for this purpose which was successfully and extensively employed in commercial production for about three years before his patent application was filed (See letters, R., 915-987). The conditions in manufacturing these barrel heads were not exacting and it was not necessary to have a glue that could parallel animal glue in strength and ease of application (R., 740).

But Perkins was trying to make a glue that the furniture manufacturers would substitute for animal glue in veneering (R., 740). The furniture trade used for veneering, animal glue with three parts of water. To be as good as animal glue the vegetable glue would also have to be used with three parts of water (R., 775; R., 110).

Perkins' difficulty was with the starch constituent (R., 741). Mr. Stryker made this perfectly clear as follows (R., 769):

> "* * * I should answer your question by saying that a glue suitable for furniture veneers or veneers of that kind could never in the world be obtained from such a base. If this were possible I think Mr. Perkins would have discovered the key to the whole situation before he did, because he worked hard

enough to do it, and it was a question of getting a starch material modified in such a way, and not carried too far, but carried on to the point where that starch material would afterwards be mixed up with two and one-eighth to two and a quarter or two and one-half, possibly, parts of water and still it would retain its natural adhesion of the raw material to the extent that it would bind the wood together and make a joint which is suitable, and which is as good as the hide or animal glue joints which had been made previous to that time,"

and again (R., 775):

"Q. In your cross examination you referred to obtaining suitable consistency and the key to the situation. What do you understand to be the practical problem that Mr. Perkins had worked out in 1907?

A. I understand it to be the discovery of proper means to, in the first place, modify a starch base to a certain defined and recognized point, this modification not being carried too far but at the same time far enough; and in the requirements of the glue using industry the amount of water that could be used was restricted to certain limits, these limits being in most cases around two to two and a half parts of water. To get the proper glue base for this the natural strength or adhesiveness of the raw material had to be retained to the largest extent possible, and this Mr. Perkins succeeded in doing and his product was capable of use under practical factory conditions in that it could be mixed in required quantities and would flow readily and as required from mixing kettles to the spreader."

Perkins had found that ordinary raw starch would not give such a glue. It was too thick. And that an

over-degenerated starch would not give such a glue. It would be too weak (R., 741, 764).

So he set himself to determining what starch characteristic was necessary to give the result he desired, namely, a glue made with three parts of water that would be as good as animal glue in veneering.

After much experimentation he found that if the water-absorptiveness of the starch was within a certain range, it would give the desired result. And this starch was the vital constituent of the new glue.

So Perkins determined that one constituent of his new glue should be starch having a certain viscosity; the other constituent was water, and was specified by the furniture industry to be not over three parts. For facilitating the dissolving of the starch in water he used alkali, which was well known for this purpose regardless of the kind of starch or amount of water.

(3) The Disclosure of Plaintiff's Reissue Patent No. 13,436 of July 2, 1912.

The invention is said to relate to improvements in glue and the method of making it from "carbohydrates containing amylo-cellulose or its equivalent." This means starch.

"Starch pastes" made by "tumefying" (swelled up by cooking) ordinary starch and water, with or without the addition of ammonia, are said to lack the necessary " 'tack', viscosity, cohesiveness and tenacity to spread and adhere properly when applied as wood glues," and such pastes on cooling are said to "become extremely thick and jellylike" and so require too much water for wood working, and it is said that such pastes do not set hard enough and are not dense and elastic enough when dry (R., 247, lines 14-43).

The objects of the patented invention are then said to be to provide a glue and a method of making the same from carbohydrates which (1) "will not have the disadvantages just pointed out, but which will be exceptionally tenacious and powerful but still amply fluid for easy application" (R., 247, lines 45-49); and which (2) "will have the great practical advantage that it may be practically used for the same purposes as the best animal glue and possess certain great advantages of permanency to weather and temperature variations far superior to those of animal glue" (R., 247, lines 52-58).

A further important object is said to be "to produce an adhesive or glue base which may be stored or sold in a dry state and which may then be prepared for use by mixing up with or without the use of heat" (R., 247, lines 62-65).

This statement of objects displays dissatisfaction with ordinary starch as a glue-base. It proposes to produce from starch a new glue-base from which a glue can be made which is tenacious and powerful but still amply fluid for easy application so that it may be practically used for the same purposes as the best animal glue.

The impediments that stood in the way of these purposes are hinted at in the opening reference to the insufficiencies of "starch pastes," and are explicitly stated later in the specification as follows:

> "As previously stated, when ordinary starch is heated with water it absorbs enormous quantities of water, and if only two or three parts of water are used becomes of a stiff jellylike form which must be very much diluted before it will be practically workable. I find, however, that using my improved glue base and method of mixing the same, this water absorbing power can be greatly reduced and can be regulated, although the mixing is done with the same

> proportions of alkali and carbohydrates or else the same temperature, which have hitherto produced unworkable jellies or weakly adhesive pastes or mucilages" (R., 249, lines 60-69).

The statement here is in effect that neither ordinary untreated starch, as used in the processes of the Gerard and Dornemann patents and by the Brooklyn Cooperage Company at Poplar Bluff, nor the over-degenerated starches, such as used by Higgins, would answer the patentee's purpose. When mixed with only two or three parts of water and alkali the ordinary starch would produce what the patentee regarded as unworkable jellies, while the over-degenerated starches would produce weakly adhesive pastes or mucilages.

The self-evident expedient of diluting the "unworkable jellies" to the desired fluidity by the addition of water was excluded by the patentee's particular purpose. He wanted a starch glue that would have the same water content as animal glue when used for wood veneering. Thus he says:

> "Practically all the water must be later removed that goes into the glue solution as applied to the joints, hence an increase of water in the glue solution involves changes in drying methods, or in drying time, or in risks of injury to the material due to warping by the extra water, all of very serious consequence" (R., 250, lines 85-92).
>
> "Thus it is of the greatest importance and value to produce a concentrated glue solution ready for application which parallels the animal glue solutions now employed industrially, in respect to water contents and physical properties in application, and is equal or superior as to strength and permanency" (R., 250, lines 101-108).

The general practice with animal glue in wood veneering was to use about 2½ parts of water, the limits being from about 1 part of water to as high as 3½ parts of water (Grosvenor, R., 110). The animal glue was dissolved in the water by heat and when so dissolved had the fluidity of a good maple syrup or a heavy pea soup.

The First Step of the Patent.

The idea of means by which the patentee achieved his purpose—avoiding the too great viscosity of glue made from ordinary untreated starch, on the one hand, and the too weakly adhesive qualities of glues or mucilages made from over-degenerated starch, on the other hand—is stated as follows:

> "To do this I first take a carbohydrate of the proper kind and treat it with a reagent to decrease its water absorptive properties in the sense that to render fluid the finished glue, comparatively little water will have to be added and the final glue will not thereby become seriously diluted" (R., 247, lines 68-74).
>
> "The preliminary treatment, however, substantially reduces the absorption of water by the starch and prevents it from becoming jellylike and tough when afterward treated either with the water as above indicated or with the alkali, or both" (R., 249, lines 84-89).
>
> "Experiments indicate that after the carbohydrate base has been treated in accordance with the first step of my process, the proportion of amylo-cellulose in the carbohydrate granule has been increased. I believe this increase in the percentage or proportion of the amylo-cellulose in the carbohydrate allows of the same to be changed into a good glue

with very much less water than would otherwise be required" (R., 249, lines 112-121).

He proposes to use as a reagent any starch converting agent capable of converting starch into soluble starch and dextrin, taking care so to control the reaction that the starch will not be wholly converted into the soluble form (R., 247, lines 75-88).

The use of acids and oxidizing agents to convert ordinary starch into soluble starch and dextrin was well known. It was not the reagent used, but the degree of degeneration effected by it, that was involved in the patentee's purpose. The essential characteristic of this first step lay not in the *manner* but in the *degree* of conversion or degeneration. He says:

"* * * it is not my object to convert the starch wholly but only to effect its physical properties when put into solution or dissolved to form glue. The effect of this treatment is also that it decreases the viscosity of the glue produced with a given amount of water without detriment to its 'tack,' quick adhesive properties and cohesion" (R., 247, lines 84-92).

"However, great care must be taken not to have the heat sufficient or the acid in such quantity as to put the starch or carbohydrate in solution. If the action of the acid and heat is carried too far the starch will be changed into dextrin and will go into solution, and as such it would be lost to my process, as I utilize only the suspended material. Even this would cease to have the desired properties if the action were carried too far" (R., 248, lines 41-51).

The principle of the invention—the fundamental idea of means—is here made plain enough. Glue made by dissolving ordinary starch in an alkaline solution with three parts of water (the quantity to which the wood

working industry was accustomed) is too thick; and glue so made from over-degenerated starch is too weak. Between these two extremes there is a range of degeneration of starch at which, with that quantity of water there will be produced a glue of ample fluidity, without serious detriment to "tack", adhesiveness and cohesiveness. The essential thing was a particular degree of degeneration—not too much, not too little.

Such a quantitative idea of means lying at the foundation of an alleged invention requires under Sec. 4888, R. S., U. S. Code Tit. 35, Sec. 33, an explicit disclosure of the upper and lower limits of the range in order that the public may know how to practice the invention and may understand the metes and bounds of the patentee's monopoly.* This requirement of the law was recognized by the draftsman of the specification and he attempted to comply with it. After the issuance of the patent that attempt was found to be defective and the patent was reissued to cure the defect.

The patentee said in the specification of the patent as originally issued (R., 1188; patent, p. 3, lines 121 to p. 4, line 9):

> "One way which has been found quite satisfactory for determining when the action of the acid or its equivalent, and the agitation, have been carried far enough in the first step, is as follows:
>
> When the carbohydrate glue base which has been dried has been boiled for ten minutes with dry live steam at 100 lbs. pressure with 9 parts of water and

*O'Reilly vs. Morse, 15 How., 62, 112; Cochrane vs. Badische, etc., Fabrik, 111 U. S., 293; Bene vs. Jeantet, 129 U. S., 683; The Incandescent Lamp Patent, 159 U. S., 465; Minerals Separation, Ltd., vs. Butte & Superior, etc., Co., 250 U. S., 336; Tyler vs. The City of Boston, 7 Wall., 327; and see in the lower courts: Matheson vs. Campbell, 78 Fed., 910, 917, 918 (C. C. A., 2) and American, etc., Co. vs. Mesta, etc., Co., 18 Fed. (2d), 538, 539 (C. C. A., 3).

tested for viscosity while hot, it showed a viscosity between that of cold water and three times that of cold water."

The Surrender and Reissue of the Original Patent.

After the issuance of the original patent, it was found that different viscosity measuring instruments gave different readings with the same substances or liquids, and, therefore, to accurately describe the test and give full information in reference to it, it became necessary to include in the specification a description of the particular form of viscosimeter to be employed. Without that the test was insufficient to identify the glue-base suitable to make the glue of the patent; and the original patent was, because of that deficient disclosure, found by plaintiff to be "inoperative or invalid by reason of a defective or insufficient specification" (Bill of Complaint, R., 4) and the patent was surrendered and reissued. In the reissue the omission was supplied by inserting the particular description of the "Perkins viscosimeter" and of the method of making the test, found in the reissue patent in lines 9-33 of page 4 (R., 250), beginning with the words, "In measuring this viscosity" and ending with the words "about 6½ seconds slower."

The specification of the reissued patent as thus corrected is an adequate disclosure within the requirements of Section 4888. It accurately marks the metes and bounds of the patentee's essential idea of means—the particular degree to which the water-absorptive properties of the starch must be reduced to serve as the glue-base of the patented glue.

This so-called 9:1 boil-up test, as thus amplified by amendment in the reissued patent, is an accurate scientific test, available in all cases and needing no further elucidation.

Starch lying within this range is, however, again described, with particular reference to the upper limit of permissible water-absorptiveness rather than with reference to the lower limit, on page 4, lines 74-81 of the patent (R., 250) as follows:

> "Also in actual practice I have found that a good glue is produced by treating the base with the chemicals to reduce the water absorbing power to a point where the base if mixed with two to three parts of water and subjected to heat of 170° F. would result in a syrupy condition instead of a thick jelly-like mass" (R., 250, lines 74-81).

It is admitted here that the untreated cassava starch used by defendant as a glue-base has a water-absorptiveness higher than the upper limit of the range measured by these tests of the patent. That alone, aside from all questions of prior art or disclaimer, is a complete defense under the authority of the cases cited in the footnote, page 21, *ante*. The rule of law is settled beyond dispute and the fact, although denied at the outset of the case at bar, is no longer denied (*post*, p. 26).

The Second Step of the Patent.

Having made clear the importance, to the final purpose of his invention, of procuring at the outset a glue-base, the water absorptive properties of which have been reduced to within the specified range, the patentee said (R., 248, lines 86-100):

> "The above forms the first part of my improved process and the various steps therein may all be carried out at the factory.
>
> In commercial use I preferably ship the dry material, obtained as above, to the consumer who car-

ries out the second part of the process at the place where the glue is to be used, but if desired the first and second parts of my improved process may be carried out together.

In carrying out the remaining steps in the preparation of my improved glue, the dried base, obtained as above, is mixed with about three parts or less by weight (of dried base) of water according to the strength of the joint and economy desired. The dried base does not materially go into solution in the water unless heat is applied, but a liquid suspension is thereby formed which is agitated and treated with a solvent of cellulose, as, for example, an aqueous solution of caustic soda or potash alkaline to phenolphthalein, using if cold from six to ten per cent. of the weight of the dry base, of caustic soda or its equivalent of caustic potash."

As the Court of Appeals said, in the *Solva case* (251 Fed., 72), "There was nothing new in the second step."

The Reference to Untreated Cassava Glue-Base in the Patent.

During the prosecution of the application, after the inventor died, his administratrix filed an amendment, without any supporting oath, inserting into the specification by amendment C of April 7, 1911 (R., 1095-1125), the words:

> "Thus, by proper adjustment of conditions of mixing I am able to produce this glue even with certain grades of untreated cassava carbohydrate and with other starches and conversion products (starchy carbohydrates)" (R., 1102).

This insertion is now made the basis for plaintiff's contention that the patent covers starch made from untreated cassava, even though that untreated cassava has high water-absorptive properties outside of the range measured by the tests of the patent.

If the "certain grades" referred to in this amendment to the specification, made after the inventor died and without supporting oath, included ordinary untreated cassava starch having water-absorptive properties which do not lie within the range measured by the tests of the patent, the amendment was a complete departure from the original disclosure; and, indeed, completely contradictory of the rest of the specification. It negatived everything the patentee had said about the necessity for, and the requisite degree of, preliminary degeneration of the starch.

So interpreted, the amendment would have been a radical change from, and an enlargement of, the disclosure of the patent and, being unsupported by an oath, would have been invalid.*

A more reasonable interpretation is that the patentee's administratrix, by this amendment, meant to say that there might be found in nature certain grades of cassava starch in which, by natural processes, the water-absorptive properties had been reduced to a point within the range of the patent disclosure, and that if so found, such grades of untreated cassava starch might be used for the purpose of his invention.

That is the interpretation put upon the language by plaintiff's attorneys, and expert, in the *Solva case*,** to

---

*Railway Co. vs. Sayles, 97 U. S., 554, 564; Eagleton Mfg. Co. vs. West, etc., Mfg. Co., 111 U. S., 490; Steward vs. American Lava Co., 215 U. S., 161, 170; Michigan, etc., Co. vs. Consolidated, etc., Co., 67 Fed., 121.

** See fuller discussion of this matter, post, pages 73-78.

save the patent from invalidity because of this introduction of new matter without supporting oath. The Court of Appeals, accepting the interpretation plaintiff's counsel put on this sentence, said (251 Fed., 66):

> "While the added matters may in a sense be new, we do not regard them of so important a character as to constitute that class of new matter which would be invalid for want of an oath under the circumstances. They are related to the original purposes and objects set out in the original specification and claims, though some of them approach the border line."

(4) Defendant's Practice.

Defendant's glue base is a high grade cassava starch flour—G. T. A. brand or the equivalent G. T. G. brand (R., 48), just as it comes on the market, of high water-absorptiveness above the range measured by the tests of the patent. To make the glue (R., 25) 100 pounds of starch is mixed with 216½ pounds of water to make a milk of starch. The milk of starch is put into a stirring kettle provided with mechanical agitators and a steam-heating jacket. To the milk of starch is added 12½ pounds of caustic soda solution made by dissolving 4 pounds of caustic soda and 8½ pounds of water. In other words, defendant uses 2¼ parts of water to 1 part of starch, and substantially a 4 per cent. caustic solution.

Plaintiff's expert admitted at the trial of the case at bar that defendant's starch base did not have its water-absorptive properties reduced to within the range of the 9:1 boil-up test, but contended that it did lie within the 170° test, in the sense that the base, if mixed with two to three parts of water and subjected to heat of 170° F., would result in a syrupy condition instead of a thick jelly-like

mass (R., 35-36). But it was shown by the evidence that defendant's base, so treated, produced a thick, jelly-like mass, so that defendant's base was excluded from the patent even by this less precise test. That was the finding of the Master to whom the question was referred (R., 604), and it is no longer disputed.*

THE PRIOR LITIGATION AND THE REPRESENTATIONS ADVANCED BY PLAINTIFF THEREIN.

The force of the early litigation on this Perkins reissued patent can be properly estimated only when it is understood that when plaintiff first litigated its patent (in the *Solva case*)—where it was immediately confronted by the whole prior art and by the prior use at Poplar Bluff and had to measure the substance and scope of the patent against that prior art—it took the same position, with respect to the scope of the patent and with respect to the essential necessity of selecting a starch having water-absorptive properties reduced to within the range measured by the tests of the patent, that defendant takes now.

It may be admitted that the fact that plaintiff took that position then does not necessarily restrict it to that position now. The representations made to the Courts then are perhaps not of the nature of estoppels (although it is different with respect to the disclaimer hereinafter discussed). But as this Court said in *Minerals Separation* vs. *Butte & Superior* (250 U. S., 345), it is always difficult to recover the realities of a situation

*The Court of Appeals said, in the case at bar (R., 650):

> "It seems to be true that the 'raw starch' which defendant uses as the base of the process by which it makes its glue is not within the limits of inherent viscosity indicated by either of these operations."

long past and much litigated, such as this, and under such circumstances evidence derived from papers which were written, and from testimony given, before the particular now important aspect of the controversy arose, is especially impressive.

Solva Case.

In the year 1915 the first suit on the reissued patent No. 13,436, brought by Perkins Glue Company against Solva Waterproof Glue Co. and Thomas B. Kane and others, was tried before Judge Sanborn (223 Fed., 792), on claims 11, 13, 16, 19, 20, 24, 28, 30, 31, 32, 37 and 38 of the reissued patent, and claims 1, 2, 3, 6, 7 and 9 of a companion patent to Perkins (No. 1,020,656), called the "alkali patent" because it covered a process of degenerating the starch in the first step by the use of alkali and an oxidizing agent instead of acid as in the particular process of degeneration of the reissued patent 13,436.

Defendants used the alkali degenerating process of the Perkins second patent. Their base was degenerated to the extent of, and responded to the tests of, the reissued patent. The validity of the patent was attacked, and plaintiff distinguished from the Gerard and Dornemann patents and from the prior use of starch glue at Poplar Bluff by insisting upon the essential importance of the first step—producing or selecting a starch base having the specified reduced water-absorptive properties. So limited, the patent was sustained, all broader claims being held invalid.

Judge Sanborn, without any specific reference to the subject-matter of the several claims of the reissued patent, held both patents valid and infringed. On appeal (251 Fed., 64), his decision was reversed in part and affirmed in part. The Court of Appeals said (p. 66):

> "The gist of appellee's contention as stated by counsel is that Perkins discovered that there is a point of degeneration of starch at which, when degenerated to that degree, the starch is treated to not to exceed three parts of water and a solvent there is produced veneering glue as good as or better than animal glue, and that appellants have appropriated that discovery and the application of it."

and (p. 73):

> "All these, considered in connection with the presumption arising from the grant of the patent, lead us to hold, though with some hesitation, that the claims covering the finished glue product as well as the process claims for that article are valid and should be sustained."

It is clear that the claims for the "resultant product" were sustained (with hesitation and only because of the equities in favor of plaintiff) by reading into them from the specification and upon plaintiff's representation, the gist of the invention that distinguished Perkins' disclosure from the prior art—the choice of a starch having reduced water absorptive properties within the range measured by the tests of the patent.

It is plaintiff who is no longer satisfied with the *Solva* decision and goes by a roundabout way to overcome it. Among the defendants in the *Solva case* was Mr. Thomas B. Kane, who is the real defendant here. He was enjoined in that case and the injunction is still in effect. The Kane Mfg. Company, of which Mr. Kane is the principal owner and moving spirit, supplies to defendant here, Holland Furniture Company, the untreated cassava starch from which defendant makes the glue complained of; just as the Solva Glue Company furnished the degenerated starch to furniture makers in the *Solva*

case. Yet plaintiff has never attempted to enforce against Mr. Kane or the Kane Mfg. Company the injunction issued in the *Solva case.* The reason is that Mr. Kane and the Kane Mfg. Company have done what, in the *Solva case,* plaintiff said they had a right to do and what in that case the Court held was old in the art and outside the scope of the Perkins patent.

Although in the *Solva case,* District Judge Sanborn decreed validity of some claims that the Court of Appeals subsequently held invalid, yet the thing actually decided by Judge Sanborn was the same as the thing actually decided by the Court of Appeals.

Both Courts accepted plaintiff's contention that the gist of Perkins' invention lay in the discovery that there is a point (or range) of degeneration of starch such that when starch lying within that range is dissolved in three parts of water and an alkaline solution there will be produced a veneering glue as good as or better than animal glue.

In both courts the Gerard and Dornemann patents disclosing the making of glue from high viscosity untreated starch were laid aside on plaintiff's representation that such starch was not good for veneering and was outside the range of the patent.

Judge Sanborn held that the Gerson & Sachse patent disclosed the same chemical process of degeneration used by Perkins and the same degree of degeneration, so that he found the Perkins glue-base and the chemical process of making it to be old; but he found Perkins had exercised invention in applying the old base to a new purpose when he dissolved it in an alkaline solution with three parts of water to make a glue for wood veneering.

That finding leads logically to the conclusion that claims for glue made by dissolving a starch degenerated to that degree in three parts of water to make veneering glue are valid, and it did lead the Court of Appeals to that conclusion. But Judge Sanborn, apparently without recog-

nizing the logical inconsistency of so doing, held valid not only the claims for making a veneering glue by dissolving such a starch in an alkaline solution with such a quantity of water, but also the claims for the old glue base and the claims for the second step as such.

It was that inconsistency in Judge Sanborn's decree that was corrected by the Court of Appeals, which finally accepted, as Judge Sanborn had accepted, plaintiff's contention that Perkins was entitled to a patent for making a wood veneering glue by dissolving in an alkaline solution with three parts of water a starch having the reduced water absorptiveness particularly specified in the patent.

As to the state of the art, Judge Sanborn adopted the summary statement of defendant's counsel (235 Fed., 795), and in this he was followed by the Court of Appeals (251 Fed., 267). This summary statement does not, nor do the opinions, include any reference to the patents of Gerard, Dornemann or Marsden disclosing the manufacture of starch glue by dissolving untreated starch in caustic solutions. That is not because those patents were not brought to the attention of the Court, but because it was represented to the Court that being based on the use of an undegenerated starch, they were outside the scope of the patent and not anticipations.

That was so fully true—the making of glue from ordinary untreated starch as in the prior patents of Gerard and Dornemann was then so completely excluded by the plaintiff from the Perkins patent—that to illustrate the superiority of glue made from starch having low water-absorptive properties within the range of the first step of the patent, as contrasted with glues made with untreated starch of higher water absorptiveness, plaintiff's counsel brought into Court some ordinary untreated cassava starch and dissolved it with less than three parts of water. The heavy rubbery glue so produced from the untreated starch was pointed to as the product of the prior art and was differentiated from

the Perkins glue and the defendant's Solva glue, both of which were made from starch having reduced water-absorptive properties within the range measured by the tests of the patent. And in their brief in the Court of Appeals, counsel said (pp. 57-58; emphasis ours):

> "The Perkins second step was illustrated by tests in Court below by dissolving Perkins base and defendants' base in accordance therewith (pp. 152-158). To show *the effect of the first step,* the same second step was applied to some raw cassava, which had not been degenerated. The result was radically different, a rubbery, jellified product was produced, which it would have been impossible to run through pipes or to spread or to use for wood veneering (pp. 156-158, fols. 701-704). It was so tough and elastic that it tended to pull together and to regather into lumps when spread. It did not have the tack of the Perkins and Solva glues. It cohered more than it adhered; the two qualities (cohesion and adhesion) were not properly proportioned (p. 158, fol. 704). The inventor referred to this when he said (Re Pat. 13,436, p. 3, lines 84-89):
>
> > 'The preliminary treatment, however, substantially reduces the absorption of water by the starch and prevents it from becoming jelly-like and tough when afterward treated either with the water as above indicated or with the alkali.' "

It was thus, by insisting upon the essential principle and mode of operation explained in the patent—the necessity for reduction of the water-absorptive properties of the starch to within the range measured by the 9 to 1 boil up test and the 170° test of the patent, as a first step—that plaintiff differentiated the subject-matter of

its patent, in the *Solva* litigation, from the prior art high viscosity starch glue patents.

It was by the same differentiation that plaintiff saved its patent from invalidity by reason of the prior public use of starch glue at Poplar Bluff.

It pointed out that the glue base used at Poplar Bluff was not within the critical range of reduced water absorptiveness specified in the Perkins patent—that it was either too degenerated *or not degenerated far enough.*

In their brief before the Court of Appeals, at page 84, counsel said:

> "Throughout their brief, appellants [defendants there] assume that a starch degenerated to any point short of the soluble starch or dextrine stages falls within the range of degeneration specified by Perkins. *Such, however, is not the case. In this wide field Perkins found a certain point or range* such that if you degenerate the starch *to that point* and *then* treat it with a co-ordinated second step you will get the desired result." (Italics and explanatory phrase ours.)

Plaintiff there had to measure the glue of the Perkins patent against glue made at Poplar Bluff from identified shipments of starch, including shipments of raw cassava starch, and it differentiated the patented invention from these prior uses of raw cassava starch by in each case measuring the viscosity of the raw cassava starch by the 9 to 1 boil-up test of the patent, and pointing out in each case that so measured, the water-absorptiveness of the raw starch used at Poplar Bluff was higher than the upper limit of the range of the patent. Among the raw cassava starches there used and so measured was a shipment of G. T. A. brand of cassava starch, the very brand now used by defendant here (R., 756, 761).

Of these starch bases used at Poplar Bluff, plaintiff's counsel said (Brief, p. 117):

> "These starch bases, the products of the process above described, may be divided into two classes: (1) *those which comprised substantially raw starch, which had not been put through any converting process or first step,* these were perhaps what Mr. Perkins shipped as H or heavy body glue, because when mixed with 4 part of water (the amount used at Poplar Bluff) the mixture was too heavy and rubbery to use; and (2) those starch bases which were very much degenerated, which had been put through a very drastic converting action—these were perhaps what Mr. Perkins shipped as L or light body glue (possibly some H. M.), because, when mixed with 4 parts of water, the mixture was too thin and did not have sufficient body to use even on sugar barrel heads.
>
> Every one of these degenerating processes is different, and it requires only a brief consideration of them to see that each is different from the first step treatment outlined in the patents in suit. Not only do they differ from the first step treatment of the patents in suit, in kind and amounts of chemicals, temperature, length of treatment, etc., but in none of them is the conversion carried to just that point described by Perkins, where, when dissolved with about 3 parts or less of water and caustic, a glue having the essential qualities of animal glue for wood joints is produced,—*which point Perkins says is where the viscosity (by the test described in the Perkins patent) is about twice that of water.*" (Italics ours.)

The Poplar Bluff prior use was on plaintiff's own representations held not to be an anticipation of the Perkins patent, for the same reason that the Gerard and Dornemann patents were not anticipations of the Perkins patent. That is for the reason that the Perkins patent was limited to a particular degree of degeneration of the starch base, and excluded glue made from high water-absorptive starch by the application of the process of the second step; like defendant's glue here.

It was by accepting plaintiff's contentions in these regards that the Court was able to sustain those process claims of the patent which cover the combination of the two steps in related succession and those product claims which cover the final product of the two-step process.

And it was not by any indefinite quality of the final glue "as good as animal glue," that plaintiff there measured the range of water absorptiveness of the starch glue-base of the patent. They measured it then by the 9 to 1 boil-up test of the patent by which defendant insists it should be measured now.

The Final Decree in the Solva Case.

Plaintiff's patent then contained 38 claims divided into five groups: (1) claims on the process of making the glue base 1, 3, 4, 5, 6, 7 and 8; (2) claims on the glue base resulting from this preliminary treatment of the starch—24, 25, 26 and 27; (3) claims on the second or dissolving step—9, 10, 11, 12, 13, 14, 16 and 38; (4) claims on the whole process—the combination of the first and second steps—2, 15, 17, 18, 19, 20, 21, 22 and 23; (5) claims on the final glue product—28-37 inclusive.

The claims listed by Judge Sanborn at the outset of his opinion as those relied upon, included four (11, 13, 16 and 38) of the second step process claims; two (19

and 20) of the whole-two-step-process claims; one (24) of the claims on the glue base; and five (28, 30, 31, 32 and 37) of the claims on the final glue product. The first-step claims of the reissued patent were not sued upon, doubtless because defendant was directly infringing upon the "alkali" first step process claims of patent No. 1,020,656. In the decree Judge Sanborn held valid and infringed the second-step process claims 13, 16 and 38, the two-step process claim 19, the glue-base claim 24, and the final glue-product claim 28 (R., 355).

On appeal the Court of Appeals accepted, as Judge Sanborn did, the accuracy of defendant's view of the prior art (251 Fed., 67-68), and in the light of this state of the art and the disclosure of the patent held (1) that the Perkins first step was old; (2) that the glue-base product of the first step was old; (3) that the second step was old; and (4) "with some hesitation, that the claims covering the finished glue product, as well as the process claims for that article are valid and should be sustained."

And at the conclusion of the opinion the Court said (p. 74):

> "The decree of the District Court sustaining the claims for a glue base process and product and for the so-called second step as such is reversed, and that part of it which upholds the claims of the patents for the final process and the resultant product respectively is affirmed, with direction to the District Court to proceed further in accordance herewith."

The opinion did not refer to the claims of the patent by number. The only claims specifically mentioned in the opinion were two claims from the second Perkins patent,—the so-called alkali process of practising the first step.

It remained to prepare a decree. It had to be determined what claims of the reissued patent were invalid and what claims were valid.

The defendant seized upon the fact that the only claims quoted were claims 7 and 9 of the second patent, and being moved to action by a circular published by the plaintiff company, which, as defendant thought, misrepresented the decision of the Court, filed a petition for rehearing saying that (R., 347):

> "* * * it is our understanding that the final process to which reference is here made is the complete refined process as finally adopted and described in claims 7 and 9 quoted in the opinion. * * *"

The defendant there was seeking to limit the patent to the particular *process* of degeneration—using sodium peroxide and caustic soda in the first step—defined in the second Perkins patent. That extreme limitation was certainly not supported by the opinion of the Court, which had found in effect that what Perkins discovered was that there exists a point (range) of degeneration of starch at which when dissolved in three parts of water and alkali there will be produced a glue having the properties and physical characteristics of animal glue.

Plaintiff's counsel filed a reply to the petition for rehearing and it may be assumed that they contended for the broadest interpretation of the patent to which they could conceivably be entitled. They must have weighed the matter with great care in the long litigation and they must have been convinced that the time had come when they should assert their rights fully and to the extreme limit of what they were entitled to.

In defining the Perkins invention and interpreting the finding of this Court at that critical juncture they said (R., 351):

"The opinion makes it clear that Perkins discovered that a starch *previously suitably degenerated* could be *subsequently* dissolved with a solvent of starch and three parts or less of water and *make the glue the patents describe,* and that that constituted a proper basis for process and *product* claims, the process requiring both the previous degeneration and subsequent dissolving operation *and the product being the resulting* 'starch glue as good as animal glue and suitable for veneering.' " (Italics ours.)

The only final product claim brought to the attention of the Court by the petition for rehearing was claim 28 which defined the final product as "a glue comprising cassava carbohydrate rendered semi-fluid by digestion and having substantially the properties of animal glue." Of this final product claim the plaintiff said (R., 352):

"But claim 28 is one of the claims of the first and broader acid patent, reissue No. 13,436, and, of course, covers glue *made from starch degenerated* by the acid process as well as by the alkali process." (Italics ours.)

And in conclusion they said (R., 353):

"The opinion points out in the middle of page 6 that the glue base of the patents may be obtained in a variety of ways. Such a base and the process of making it, after being given a broad construction by the Court, is found to be old, and the Court also says the second step is not new or patentable, 'as such'; but *the combination of the two operations in related succession to produce the good-as-animal glue suitable for veneering the Court finds to be new and patentable* as a process, and the *resulting* finished

glue the Court finds to be new and patentable as a product.

As the opinion plainly indicates, *the final glue product* may be made by *suitably* treating a *suitable* base, whether *previously degenerated* by the alkali treatment or by the acid treatment, or obtained by intermixture or simply found in the market—*provided only that that base is in the proper state or condition of degeneration* when treated to make this *final glue product.*

The Court evidently felt that the 'second step alone' or the 'second step as such' might produce other products than the 'starch glue as good as animal glue and suitable for veneering' covered by claim 28 and others (*as if, for example, applied to the under-degenerated starch, such as raw starch,** or to an overdegenerated starch, such as dextrine) and therefore held that the claims for the 'second step as such' were invalid. But the Court makes it clear that the patent covers *the product of the second step when the second step is applied to a base previously suitably converted by an earlier operation to the proper slight degree of degeneration* to produce in the end the starch glue as good as animal glue and suitable for veneering." (Italics ours.)

This was, in our opinion, a fair interpretation of the opinion of the Court and no words could be better chosen than were the words of plaintiff's counsel at that critical time, to express the fact that the product claims did not cover the application of the second step to ordinary untreated starch having water-absorptiveness above the range measured by the tests of the patent.

---

*The thing charged to be an infringement in the cases at bar is, of course, the product produced by applying "the second step alone" to "under-degenerated * * * raw starch."

The Court denied the motion for a rehearing and the parties went before Judge Sanborn in the District Court with conflicting contentions as to the proper form of the final decree.

Judge Sanborn said, after discussing the opinion of the Court of Appeals:

> "From these quotations it seems probable that the Appellate Court intended to sustain only those claims of the patent which include only the two steps, and only when their use results in the Perkins glue *together with those additional claims which count on such glue as a product of the two steps,* and no others." (Italics ours.)

When the conclusion arrived at by Judge Sanborn was applied to the claims in the patent, plaintiff and defendant did not agree.

Plaintiff as we have seen, contended that the Court of Appeals had held that the " 'starch glue as good as animal glue and suitable for veneering' covered by claim 28 and others" excluded a glue produced by applying the second step to "under degenerated starch, such as raw starch"; and the three product claims here in suit were held to be valid with that interpretation, expressed by Judge Sanborn in the words:

> "The Appellate Court intended to sustain only those [product] claims of the patent * * * which count on such glue as a product of the two steps."

Among the claims that Judge Sanborn felt to be invalidated by the decision of the Court of Appeals were the so-called "second step" claims (Nos. 9, 10, 11, 12, 13, 14 and 38). Plaintiff urged that these claims also should be held valid by limiting them to the application of the second or dissolving step to starch previously degener-

ated to the extent described in the patent. But Judge Sanborn thought that this could not be done in view of the fact that the second step as such had been found to be old and the Court of Appeals had said that "The decree of the District Court sustaining the claims * * * for the so-called second step as such is reversed" (R., 360) and he held these claims invalid.

Plaintiff Acquiesced.

Plaintiff immediately accepted that decision. The monopoly left to plaintiff was of great value and plaintiff proceeded to consolidate and enforce it.

The decision of Judge Sanborn was in fact in close accord with what plaintiff had asked for. It excluded from the patent the application of the second-step to raw starch on the one hand and to dextrine on the other, and properly limited the patent to a glue made by dissolving in an alkaline solution, with not more than three parts of water, a starch having reduced water-absorptiveness within the range measured by the tests of the patent.

Plaintiff's own presentation to the Court of Appeals and to Judge Sanborn precluded any broader interpretation of the product claims than Judge Sanborn gave to them.

The Disclaimer.

Thereupon plaintiff entered a disclaimer eliminating from the patent all of the first step claims and the glue-base claims, but preserving in part the "second step" claims by expressly limiting them to the making of glue by applying the second or dissolving step to starch already degenerated to the extent described in the patent.

This disclaimer executed as of January 30, 1919, by the plaintiff company, assignee of the patentee, included the following language:

"That by the record and decisions in the United States District Court for the Northern District of Illinois, Eastern Division, and in the United States Circuit Court of Appeals for the Seventh Circuit, in the case in which your petitioner was plaintiff and appellee and Solva Waterproof Glue Company and others were defendants and appellants, your petitioner is advised that the said Reissued Letters Patent No. 13,436, in so far as concerns claims 1, 3, 4, 6, 7, 8, 9, 10, 11, 12, 13, 14, 16, 24, 25, 26, 27 and 38 thereof, *covers and includes more than the said inventor had a right to claim as new.*

"That the subject matter not herein and hereby disclaimed is definitely distinguishable from the part or parts disclaimed herein, and is truly and justly the invention of the said Frank G. Perkins, and is a material and substantial part of the thing patented.

"Your petitioner, therefore, for the purpose of complying with the requirements of the law in such case made and provided, and of disclaiming those parts of the thing patented which your petitioner does not choose to claim or hold by virtue of said Reissued Letters Patent No. 13,436, hereby enters its disclaimer of claims 1, 3, 4, 6, 7, 8, 16, 24, 25, 26 and 27 thereof (to wit: the claims for the glue base *per se* and for the process of making the glue base *per se*) *and further your petitioner hereby disclaims from claims* 9, 10, 11, 12, 13, 14 and 38, *of said Reissued Letters Patent No.* 13,436 *any process of making glue, excepting where the starch or starchy product or carbohydrate subjected to the process, is degenerated to the extent described in the said Reissued Letters Patent No.* 13,436, whereby the process results in the good as animal glue described in said Reissued Letters Patent No. 13,436."

(We have emphasized the portion of the disclaimer in which the plaintiff disclaimed the thing the defendant here uses.)

Of this disclaimer plaintiff says in paragraph 7 in the bills of complaint in the case at bar (R., 5).

"7. That thereupon, having reason to believe that through inadvertence, accident or mistake certain claims of said Letters Patent were *too broad, including that of which the applicant for said Letters Patent was not the first inventor,* plaintiff duly entered in the United States Patent Office, on or about the 6th day of February, 1919, its disclaimer of claims 1, 3, 4, 6, 7, 8, 16, 24, 25, 26 and 27 of said Letters Patent (to wit: the claims for the glue base *per se* and for the process of making the glue base *per se*); and also disclaimed from claims 9, 10, 11, 12, 13, 14 and 38 of said Letters Patent, *any process of making glue, excepting where the starch or starchy product or carbohydrate subjected to the process, is degenerated to the extent described in said Letters Patent,* whereby the process results in the good as animal glue described in said Letters Patent, a duly certified copy of which disclaimer is now ready to be produced in Court." (Italics ours.)

This disclaimer was filed under the provisions of Sections 4917 and 4922 of the Revised Statutes (U. S. Code, Tit. 35, Sec. 65 and Sec. 71) which provide that where a patentee has claimed "more than that of which he was the original or first inventor or discoverer" he may, if he wants to (Sec. 4917), and must, if he desires to "maintain a suit at law or in equity for the infringement of any part thereof which was *bona fide* his own" disclaim such parts of the thing patented as

he shall not choose to claim or to hold by virtue of the patent, provided that what remains "is a material or substantial part of the thing patented" (Sec. 4917), and "definitely distinguishable from the parts claimed without right" (Sec. 4922).

Both sections of the statute have reference to a case in which a patentee, through inadvertence, accident or mistake, and without any fraudulent intent, has claimed more than he was entitled to, and where the part which is *bona fide* his own is clearly distinguishable from the part claimed without right. They apply only when such a clear distinction exists.*

The patent, in these so-called "second step" claims, had been held to claim more than the patentee was entitled to. To maintain a suit at law or in equity for infringement of that part of the invention which was *bona fide* its own plaintiff was required to make, in good faith and without intent to defraud or mislead the public, its disclaimer; and to show that what remained within the monopoly of the patent after the disclaimer was definitely distinguishable from what had been claimed without right.

The thing disclaimed was definite enough. The disclaimed "second-step" claims are printed in the margin.**

---

*Hailes vs. Albany Stove Co., 123 U. S., 582, 588.

**9. The process of making glue which consists in treating starch below the bursting temperature of the starch, with a digesting agent such as caustic and water until the material assumes a viscous semi-fluid consistency adapted to be applied by machinery.

10. The process of making glue which consists in dissolving cassava carbohydrate in caustic alkali until a glue is formed as distinguished from mucilage, sizes and pastes.

11. The process of making a glue, which consists in treating a starchy carbohydrate with caustic alkali, and water, to dis-

(Footnote continued on next page.)

Each of them covers the making of glue having qualities suiting it for use as a good veneering glue by dissolving starch in a solution of caustic alkali, and particularly with "about three parts or less by weight of water" (Claims 11, 12, 13, 14 and 38).

In some of the claims (11, 14 and 38), the proportion of alkali used is emphasized. In claim 9 treatment is to be conducted "below the bursting temperature of the starch," and in claim 13 a "suitable" starch is to be chosen "a material portion of which is substantially

---

solve the carbohydrate, the total amount of water used being about 3 parts or less by weight of the carbohydrate, the amount of caustic alkali used, calculated as NaOH being about 10% or less by weight of the carbohydrate so that a wood glue is formed, as distinguished from mucilages, sizes and paste.

12. The process of making a glue, which consists in mixing starch with water and caustic alkali to dissolve the carbodrate, the amount of water used being about 3 parts or less by weight of dry carbohydrate so that a wood glue is formed, as distinguished from mucilages, sizes and paste.

13. The process of making a wood glue which consists in treating a suitable starchy product a material portion of which is substantially insoluble in water with a solvent of cellulose and about 3 parts or less by weight of water, to produce a glue having adhesive powers substantially as great as those of good animal glue.

14. In the making of glue, treating a suitable starchy product with about three parts or less by weight of water and adding a solution of caustic soda or other equivalent alkali using about 10% or less by weight of the caustic soda or its equivalent of other alkali to dissolve the product.

38. The process of making a wood glue which consists in suspending a glue base containing amylaceous matter insoluble in water in about three parts or less by weight of water and treating the base with an alkali properly proportioned substantially as described to produce a glue having a lasting viscosity to flow through pipes and the adhesiveness of animal glue.

insoluble in water," and in claim 38 the glue-base is to be a starch "containing amylaceous matter insoluble in water." But these distinctions did not save the claims from invalidity.

The use of three parts or less by weight of water would not produce the Perkins glue with all starches, but only with starches having water-absorptiveness within the specified range. Above that range the resulting glue would not be the Perkins glue because it would be too thick, jellylike and tough, and below that range it would be too thin and weak.

The dissolving of starch in alkaline solutions to make glues in the prior art was commonly conducted below the bursting temperature of the starch.

Specifying that a material portion of the starch is substantially insoluble in water distinguished only from the soluble starches. It excluded starches below the lower limit, but did not exclude starches above the upper limit.

So these claims were not limited to the selection of a starch within the Perkins range, and, therefore, did not define the Perkins invention. Plaintiff had urged that the Court should read into these claims from the specification—because of the adjective phrases they contain such as "to produce a glue having adhesive power substantially as great as those of good animal glue" (claim 13); or "to produce a glue having a lasting viscosity to flow through pipes and the adhesiveness of animal glue" (claim 38)—a limitation to the making of glue from starch having water-absorptive properties reduced to within the range described in the patent. But the Court declined to do that and so plaintiff proceeded to do it by disclaimer with limitations.

It disclaimed the making of glue from starch by dissolving it in an alkaline solution with three parts or less by weight of water except only when the starch, chosen as the glue-base, is "degenerated to the extent described in said Reissued Letters Patent No. 13,436."

Plaintiff is, of course, bound by the disclaimer and cannot now reclaim anything it then disclaimed.*

But it is now admitted that defendant's procedure here does not fall within that exception. Defendant here makes its glue not from a starch degenerated to the extent described in the patent, but from a starch having high water-absorptiveness above the range described in the patent.

For its starting material, defendant has chosen the ordinary commercial untreated cassava starch having water-absorptive properties higher than the upper limit of the range measured by the tests of the Perkins patent, and therefrom it has made a very heavy, viscous and ropy glue by continued and violent agitation in power mixing machines, and it has succeeded in using that heavy glue in wood-veneering despite the fact that it has not the ample fluidity of the Perkins glue.

In doing this it has not followed Perkins. It has accepted the thing that Perkins rejected after his experience at Poplar Bluff; excluded by the language of his patent specification; differentiated from in the *Solva* litigation to save his claims from anticipation by the prior art, and by the Poplar Bluff use; and disclaimed at the end of the *Solva* litigation so that he might proceed to enforce claims covering his real invention.

---

*Dunbar vs. Meyers, 94 U. S., 187, 193; Atlantic, etc., Co. vs. Hulings, 21 Fed., 519, 520; Bracewell vs. Passaic Print Works, 107 Fed., 469.

Further Enforcements of Plaintiff's Patent Rights.

The Hood-Wright and West Michigan Cases.

Having thus consolidated its position and with a patent that still covered all that Perkins or the plaintiff had up to that time asserted that Perkins was the inventor of—glue made by (1) selecting as the glue-base a starch having water-absorptive properties within the defined range and (2) dissolving that starch in an alkaline solution with three parts of water,—plaintiff brought suit against *Hood-Wright* and the *West Michigan Furniture Co.* of Grand Rapids. These cases were decided in favor of the plaintiff in September, 1920, by Judge Sessions (279 Fed., 454).

The claims there involved were the second-step claims 13 and 38, and the product claims 28, 30 and 31.

The infringement there complained of is defined in Judge Sessions' opinion in the following words (p. 455):

> "The glue base manufactured and sold by the National and International Process Companies and used by defendants is not prepared in accordance with the method or first step of the process of the patent but is produced by mixing commercial starches of different grades and kinds, *the raw, under degenerated and over degenerated starches being so proportioned that the mixture has the same average degeneration and the same water-absorptive properties as the processed glue base of the patent.*" (Emphasis ours.)

The effect of the decision was that these claims are not limited to that particular chemical process of degeneration by acid treatment described in the reissued patent. The "second-step" claims 13 and 38 are infringed by choosing as a glue-base a starch having the same water-absorptive properties as the glue-base of the pat-

ent, and dissolving that starch in an alkaline solution with three parts or less by weight of water; and the product claims 28, 30 and 31 are infringed by a glue so made.

That was the interpretation put upon the claims by the plaintiff in the *Hood-Wright* and *West Michigan* cases, and if plaintiff is held here to the position it took there, the decision in the District Court in the case at bar will be affirmed and the decision of the Court of Appeals will be reversed.

Judge Sessions based his decision upon the Court of Appeals' decision in the *Solva case*. Of the statement in the patent specification that certain grades of untreated cassava starch might be used as the glue-base of the patent, Judge Sessions said (p. 456):

> "In his specification, the patentee points out, or at least suggests, that his glue base may be produced without using his preferred process. It must follow that the claims for the inventor's final process, applied to or in combination with *the glue base of the patent*, in whatever *manner* such base may have been produced, are valid. That the Court of Appeals intended so to hold seems reasonably probable."* (Italics ours.)

---

*In the Hood-Wright and West Michigan cases, as in the Solva case, plaintiff and its expert, Dr. Grosvenor, interpreted this statement, that certain grades of untreated cassava starch might be used, as meaning that starches of the reduced water-absorptiveness essential to the Perkins patented glue might occur in nature, and that when the chemist was once instructed what that essential range of water-absorptiveness was and how to measure it, he could then select from such low water-absorptive starches on the market a starch suitable for use as the Perkins glue base. And Dr. Grosvenor's testimony to that effect as given in the West Michigan case is stipulated into the record here (See R., 121, 124 and 125-126).

Of the "second step" claims 13 and 38, he said (p. 456):

> "These claims are not strictly for the second step of the process alone and as such, but are for the final process, applied to or in combination with the glue base of the patent. Such a construction avoids inconsistency and satisfies the mandate of the court in both letter and spirit."

Of the disclaimer, he said (pp. 456-457):

> "Of course, the plaintiff is bound by its disclaimer, but the limitation thereby imposed does not extend beyond the plain meaning of the language employed and the purpose sought to be accomplished. The sole object of the disclaimer was to narrow the claims with respect to the starchy product or glue base to be subjected to the final process of the patent. Under the disclaimer the starch or starchy product to be processed must be degenerated to the extent described in the patent before being subjected to the final process of the patent. So limited, the claims are valid and infringed."**

The Case at Bar in the District Court.

The next case to come before the Court, and the first one in which the glue-base involved was the high water-absorptive untreated starch sold by the Kane Manufacturing Company, is the case at bar, which was tried before Judge Sessions in 1921 and decided by him on July 8th of that year (279 Fed., 457).

The claims originally declared on were the "second-step" claims 13 and 38 and the glue product claims 28, 30 and 31.

**That conclusion also is in strict accordance with the stand taken by plaintiff's counsel and expert in the West Michigan case and carried into the case at bar by the testimony of Dr. Grosvenor, stipulated from the West Michigan case (See R., 119-120 and 130).

In addition to the untreated Kane base which finally became and now is the sole subject of controversy in the case at bar, there was also involved at the trial of the case the use by defendant of some mixed starch of low water-absorptiveness furnished by the Solva Waterproof Glue Co. and by the International Process Co. of the same character as that adjudicated in the *Hood-Wright* and *West Michigan* cases. The making of glue from that Solva glue-base and International Process glue-base was within the scope of both the second step claims and the glue product claims since those starches had low water-absorptiveness within the range measured by the tests of the Perkins patent. In the final decree (R., 637) it was so adjudicated. Defendant did not appeal from that adjudication and the consideration of those glue-bases dropped out of the case.

At the trial, plaintiff's expert admitted that the Kane base did not respond to the 9 to 1 boil-up test, but took the position that it was within the range of the Perkins patent as measured by the 170° test (R., 35) and this evidence as to the degree of degeneration of the Kane base was then accepted by Judge Sessions, who said (279 Fed., 457):

> "In the present case, a part of the glue base used by defendants has been produced in the same way and by the same manufacturer [as in the *Hood-Wright and West Michigan* cases]; but another part has been produced by another manufacturer, by selecting a single grade and quality of commercial cassava starch and merely sifting out the impurities therein contained. *Manifestly the resultant glue base is the same, whether consisting of a mixture of starches of different degrees of degeneration or of a single starch of the same degree of degeneration as the mixture.*" (Emphasis ours.)

To this holding Judge Sessions added that plaintiff's expert had testified (p. 458):

> "that the starch * * * has been degenerated as required in the process claims of the patent. Testimony based upon an analysis of a single sample is not entirely satisfactory, and ought not to be accepted as conclusive. If defendants' glue base consists of a starch which has been degenerated as described in the patent, the process claims declared upon are infringed. On the other hand, if the starch base has not been so degenerated, the process claims are not infringed. Further proof upon this question may be taken by either party upon the accounting."

Having found (erroneously as it turned out) that the Kane base had the same degree of degeneration as the mixture of starches in the *Hood-Wright* and *West Michigan* cases, Judge Sessions' uncertainty as to whether or not the starch "has been degenerated as required in the process claims of the patent" and "has been degenerated as described in the patent" can be understood only as contemplating a *process* of degeneration as distinguished from a *degree* of degeneration, or so it seems to us. At any rate, Judge Sessions did not hold that either the "second-step" claims or the product claims were infringed by a glue made from starch which *did not* have the degree of degeneration specified in the patent. At most, he accepted the contention of plaintiff's expert that the 9 to 1 boil-up test did not apply, but the 170° test did.

In accordance with his instructions testimony was taken on the accounting as to the degree of degeneration of the Kane base, and the Master found that it was not degenerated to the degree measured either by the 9 to 1 boil-up test or by the 170° test (R., 604) and, thereupon, and after the decisions of the Court of Appeals of the Second Circuit in the *Standard Furniture case*

and the Court of Appeals of the Seventh Circuit in the *Gould Mfg. Co. and Wisconsin Chair cases,* Judge Sessions entered a final decree holding that neither the "second step" claims nor the product claims were infringed by the Kane base (R., 637).

The Standard Case in the Second Circuit.

The next case to be tried was the *Standard Furniture case,* before Judge Cooper in the Northern District of New York in 1922. The base there involved was Viscamite, an untreated cassava starch supplied by the Bloede Company of Baltimore.

The claims relied on were the second-step claims 13 and 38 and the product claims 28, 30 and 31.

There again there was conflict of evidence as to the degree of degeneration of the base. The Court recognized that the Perkins discovery depended upon a particular range of degeneration of the glue-base (279 Fed., 459); that the Court of Appeals in the *Solva case* had held claims 13 and 38 invalid because they did not exclude what was old in the art (p. 460); that the disclaimer excluded from the patent any process of making glue excepting where the starch or starchy carbohydrate subjected to the process is degenerated to the extent described in the patent (p. 460); that Judge Sessions, in the *Hood-Wright* and *West Michigan* cases had held claims 13 and 38 "as limited by the disclaimer" to be valid and infringed (p. 460); and Judge Cooper adopted that view (p. 460).

On the question of infringement Judge Cooper said that the Court of Appeals in the *Solva case* had held the patent infringed by a glue made from starch "degenerated to a stage equivalent to that produced by Perkins first step" (p. 462). The evidence as to the degree of degeneration of defendant's base was discussed at some length (p. 463). It did not seem to Judge Cooper

sufficient to show that defendant's base was not degenerated to the extent specified in the patent, and he said (p. 464):

> "It is manifest that, where the raw starch is procured on the market, already sufficiently degenerated, so as not to require the chemical treatment of the first step of the Perkins patent, or where commercial starches of different grades and kinds may be mixed mechanically to produce the required degree of degeneration, the defendants cannot with impunity use such base, together with the other step of the Perkins process, and obtain the Perkins glue. This was in substance the holding in the Illinois and Michigan cases."

Defendant here has no occasion to question the correctness of the foregoing statement by Judge Cooper, but he finally went on to hold that:

> "Where the Perkins glue, as described in the product claims (28, 30, 31), or its equivalent, is in fact obtained as described in those claims, those claims are infringed, regardless of the degree of degeneration of the base. The question of degree of degeneration or viscosity of the base is material only to the process claims (13 and 38) affected by the disclaimer. The Perkins patent has been infringed by the defendant corporation."

It was this holding that was reversed by the Court of Appeals of the Second Circuit in January, 1923 (287 Fed., 109).

The Gould-Wisconsin Chair Cases in the Seventh Circuit.

In point of time, the next case to come before the Courts was the *Gould Manufacturing and Wisconsin Chair cases,* tried before Judge Geiger in May, 1922. There the infringement complained of was the use of

the same Kane base that is involved here. For the first time it was there definitely proved, and plaintiff was forced to admit, that the untreated cassava starch sold by the Kane Manufacturing Co. as a glue-base does not in fact respond to any tests of the Perkins patent in suit, and is not in fact a starch having water-absorptive properties within the range measured by those tests. The issues were greatly simplified and clarified by this elimination of all controversy and pretense as to whether or not the Kane base does respond to the tests of the patent, and Judge Geiger held that under those circumstances there was no infringement of the product claims 28, 30 and 31 which were the only claims there in issue, as they are now the only claims in issue in the case at bar.

Judge Geiger's opinion is a condensed and lucid statement of the whole essence of the controversy, and it seems to us that the conclusion there arrived at is unassailable.

It was affirmed by the Court of Appeals of the Seventh Circuit in June, 1923 (292 Fed., 596). The Court said (p. 597):

> "Following the final decree of Judge Sanborn, appellant filed in the Patent Office a disclaimer of all the claims for the glue base and all the claims for the process of making the glue base; and appellant further disclaimed 'from claims 9, 10, 11, 12, 13, 14 and 38,' which cover the second process, 'any process of making glue excepting where the starch or starchy product or carbohydrate subjected to the process is degenerated,' by use of the first process, 'to the extent described in the said patent.' In our judgment this disclaimer is a conclusive bar to appellant's attempt to monopolize a product, which does not depend at all for its existence upon the use of appellant's valid process claims.

In addition to the foregoing reasons, we may say that our view of the prior art leads us to the conclusion that the only patentably novel thing that could be attributed to Perkins' labors was the combination of two processes which severally were old, and that no product claims could validly be given a broader sweep of monopoly than inheres in the combined processes."

The Opinion of the Court of Appeals in the Case at Bar (R., 645).

The opinion of the Court of Appeals opens with a discussion of the commercial success of the Perkins glue.* It is true that Perkins introduced starch glue into the veneer industry in this country. By selecting as a glue base a starch having its water absorptiveness reduced to within the range defined in his patent—far enough to get ample fluidity for easy application and not so far as to substantially impair the strength of the glue—he produced a vegetable glue that paralleled the animal glue solutions then employed in the veneering industry in respect to water content and physical properties in application, and equalled them in strength and permanency. It was for this achievement that his patent was granted. By an intensive campaign of salesmanship he overcame the reluctance of veneer makers to depart from animal glue to which they were accus-

*We cannot understand the Court's statement (R., 646), "It was known (though very likely not to Perkins) that this inherent degree of water-absorptiveness could be lessened by artificial treatment, called degeneration," because it is clear that Perkins, like everyone else, in the art, knew that and had practiced it for years in connection with the glue bases he supplied to the Brooklyn Cooperage Company at Poplar Bluff.

tomed (R., 750, 751, 797) and when the war raised the price of animal glue to a prohibitive figure for veneering (R., 405, 412), the Perkins vegetable glue was widely adopted in the veneering industry. It has never found any substantial application in wood joint work (R., 142, 144, 225). It was because of the commercial success of his glue in veneering that the patent was sustained in the *Solva case,* in spite of the fact that the art already knew how to make from starch glue-bases of all degrees of water-absorptiveness, including the very degree chosen by Perkins.

The Court of Appeals in the case at bar defined Perkins' invention as follows (R., 646):

> "Perkins lessened the capacity of the starch molecules for water absorption, but was careful not to carry the treatment far enough to change the water into dextrine or to dissolve it, which, with the subsequent treatment, would have produced paste, mucilage, or sizing."*

Following this the Court adds (R., 646-647):

> "Because the starch water-absorbing capacity had become relatively small, a small amount of water would make a fluid mixture, so that it could be properly applied, and yet the necessary tenacity would remain."

These statements are a fair enough definition of what Perkins did.

But the Court, saying that the "second step" treatment was also broadly well known, added that by it, "the pri-

---

*It is a mistake to use the word "sizing" as an antonym for the words "paste" and "mucilage." Starch glues of all strengths were used for sizing. That word does not define a thing; it defines the use of a thing.

mary starch and water mixture was converted into a new compound, which had customarily been one of those weaker adhesives, and which, by Perkins' treatment, became glue."

That is true only when the over-degenerated starches are used, not when the under-degenerated starches are used with violent agitation, as in the Gerard and Dornemann patents.

The Court then (R., 647) selects claim 30 as typical and bases its subsequent discussion on that claim. Then (R., 648) the Court says:

> "The defense primarily urged is that the specified process or processes must be so far implied in the claim that defendant does not infringe."

This is a complete misunderstanding of defendant's position there and here.

Defendant here does not contend, as was contended by the defendants in the *Solva* and *Hood-Wright* and *West Michigan cases,* that the specified *process* of degeneration of the Perkins patent must be implied in the product claims. Defendant here recognizes the general rule, referred to by the Court of Appeals, that normally a new process and a new product are separate and independent things and that it is an exceptional case when process and product are necessarily inherent and inseparable "like the two sides of a sheet of paper."

But the product claims and the disclaimed "second step" claims of the Perkins patent are of that exceptional character,* if, indeed, it can be properly said that

---

*Giant Powder Co. vs. California Powder Works, 98 U. S., 126; Packing Co. cases, 105 U. S., 566; Western Electric Co. vs. Ansonia, 114 U. S., 447.

the disclaimed "second step" claims were process claims at all.

The invention, even as defined by the Court of Appeals, lay in the selection of a particular kind of starch as the starting material—glue-base—and the treatment of that with a particular amount of water to make a veneer glue.

The defect in the "second step" claims as they stood in the original patent was that, although they defined the particular quantity of water they did not limit the selection to the particular kind of starch, chosen as the glue-base. They were broad enough to cover the making of glue by the application of the "second step" to any starch. For that reason, they were anticipated by the prior patents and by the prior use at Poplar Bluff, and failed to define the very thing that plaintiff insisted was the gist of the invention. To make them define the gist of the invention plaintiff disclaimed from them the application of the "second step" to any starch except when the water-absorptiveness of starch had been reduced to within the stated range.

Before the disclaimer, and as a result of plaintiff's own presentation of the invention in the *Solva case*, the product claims had been sustained only by limiting them to the glue product which results when such a selected starch is dissolved in an alkaline solution with three parts or less of water.

Between *the making of glue* by selecting such a starch for the glue-base and then dissolving it in an alkaline solution with 3 parts of water, and *a glue made* by dissolving such a selected glue-base in an alkaline solution with 3 parts of water there is no difference; no more difference than between the two sides of a sheet of paper or between a shadow and the body that produces it (98 U. S., 137). That is very well illustrated by referring

to plaintiff's interrogatories in this case (R., 17) where the only language in which plaintiff could ask defendant whether it had infringed the patent was such as this (Interrogatory 3):

> "3. Has the defendant company in the year 1919 or the year 1920 made vegetable glue by dissolving vegetable glue material (not purchased or obtained from plaintiff, Perkins Glue Company) with three parts or less of water and less than 10% of caustic soda to produce a vegetable glue and used it for glueing together veneered stock for furniture panels?"

It is confusing and misleading to refer to the procedure of the "second step" claims as a process. To do so implies that there was inherent in these claims some *particular process* of degeneration or some particular *process of mixing,* or both. The fact is that in these claims, as they originally stood, there was only implied a choice of a *quantity of water,* and in these claims, as amended by the disclaimer, there was implied a choice of a grade or *quality* of starch and a choice of a *quantity* of water.

The result of the disclaimer was to exclude from the patent starch made with the chosen *quantity* of water unless there was also used in making it the chosen *quality* of starch.

Defendant makes glue with that chosen quantity of water, to be sure, but not with that chosen quality of starch, and it is, therefore, operating within the disclaimed field. It is without sensible meaning, we think, to say that in so doing defendant, nevertheless, infringes the product claims and so cannot use the glue so made without paying tribute to plaintiff.

The fact that in general a product and the process of making it are separate and independent things has nothing to do, we think, with the present discussion.

There is no reason to take any exception to the remark of the Court of Appeals (R., 648) that in the product claim 30, there is "a suggestion of reference to method, but only a suggestion; the substantial reference is to the constituents which make up the finished product, and is without dependence on the method by which they are combined."

It is because defendant does not use the constituent glue-base that characterized the broadest aspect of Perkins' invention that it does not infringe.

It is in the next paragraph of the opinion of the Court of Appeals (beginning "We understand defendant to contend * * *" R., 649) that the vital error lies. Defendant does contend that to save claim 30 from anticipation, and to infringe that claim, we must start with a glue-base having water-absorptiveness within the range specified by Perkins.*

The Court of Appeals went on to say:

> "* * * Not to save from anticipation, but to make operative and intelligible, there is an implied limitation to that base which, when combined as stated, will give the result stated. In other words, out of the variety of starch carbohydrates we must select one suitable for this combination. In this there is no forbidden vagueness, for the specification teaches that starch is suitable when its water-absorbing capacity is not too high nor too low, but is in what we may call for convenience the medium range. It cannot be said that Perkins put any absolute limits

*If that character of starch is what the Court meant "by the product of the first step," we agree with the Court's statement of defendant's contention in the first sentence of that paragraph (R., 649). But if the Court meant by the words "the product of the first step," the product produced by the particular process of degeneration of the first step, we do not then contend that claim 30 is so limited.

on this range. He was not obliged to do so, and he carefully refrained. He warned that the degeneration must not be carried to the point of disintegration, or of starch solution (line 45, p. 2); but he states no maximum or minimum limit, purposing rather that this water-absorbing power can be 'regulated' (line 68, p. 3). So far from supposing that he must use his first step and carry it to a definite point was that he said he could start the second step, though not as well, with 'certain grades of untreated cassava' (line 81, p. 3)[1]. He then gives a method of testing his proposed base to find whether it is sufficiently degenerated to suit him, the 9 to 1 boiling test (line 125, p. 3); but he introduces this by saying (line 121) 'one way which has been found satisfactory for determining, etc., is.' As to the other test which he suggests, the 170 degree test, he says (line 74, p. 4): 'Also in actual practice I have found that a good glue is produced by treating the base with the chemicals to reduce the water-absorbing power to a point where, etc.' It seems to be true that the 'raw starch' which defendant uses as the base of the process by which it makes its glue is not within the limits of inherent viscosity indicated by either of these operations, although it clearly is within that medium range which is essential to the result. We think this not important in considering the construction of the patent on its face. To confine the base to these two suggested examples (they are examples, not tests) would be to rewrite the specification.

---

[1]This was perhaps merely prophetic, because the record indicates that he had not found any raw starch which would perform properly for his second step; but he was at least guarding as well as he could against the possibility that there might be, or might later come into the market, some usable raw starch."

What does the Court mean by saying that the measures of sufficiency of the degeneration as stated in the patent "are examples, not tests"? They are the only measure of the degrees of degeneration in the patent, and without some such measure, the patent would be invalid for insufficiency of disclosure, since the invention admittedly depends upon some particular degree of degeneration.

As soon as these measures of the patent are rejected, the whole thing is again at large and no one can say what degree of degeneration is within the patent or how the product of the patent is to be differentiated from the product of the prior art or from the thing disclaimed when the plaintiff said that it disclaimed the making of glue with three parts of water from any starch except only starch degenerated to the degree described in the patent.

The Court of Appeals accepts as a sufficient yardstick the expression "as good as animal glue for veneering." To Perkins, glue made from the high water-absorptive untreated starches was not as good as animal glue for veneering because it did not have the necessary fluidity, and by that measure it would still be excluded from his patent. In fact, so defined, defendants' glue is not as good as animal glue because it requires expensive and continuously operated powerful mixing machines that animal glue does not require.

As the Court of Appeals of the Second Circuit said in the *Standard case* (287 Fed., 112):

> "Plaintiff has defined its product as 'a new vegetable glue, as good as animal glue for veneering.' We think that this definition is not advanced by embodying in it a laudatory phrase descriptive of intended result."

As we have seen (*ante*, pp. 33 to 35), no such yardstick was applied by plaintiff in the *Solva case*, where it had to differentiate the subject-matter of its patent from the earlier patents of Gerard, Dornemann and Marsden and

from the public use at Poplar Bluff. There the yardstick applied was the 9:1 boil up test of the patent.

In the next paragraph of its opinion in the present case the Court says (R., 650):

> "Coming to the next point in the discussion,—defendant says that it is buying an ordinary raw starch on the market, as it rightly may, and dissolving it into glue by an old process, as it rightly may, and thereby gets the product it is using in its veneering work. This is to say that claim 30 (construed as we do) is invalid for lack of invention."

It is not defendant's position here that because the glue-base it dissolves into glue by the old second-step is an ordinary raw starch bought on the market, the patent is, therefore, not infringed. Nor is it defendant's position that claim 30 would for that reason alone be invalid for lack of invention.

Defendant's position is that the ordinary raw starch defendant uses is the same ordinary raw starch that Perkins rejected. It is a starch of high water-absorptiveness above the range of the Perkins patent and corresponding to the starch that Gerard and Dornemann and Marsden dissolved with caustic to make their glues and that the Brooklyn Cooperage Co. used at Polar Bluff to make its barrel-head glue prior to the Perkins invention; and it is a starch within the range that plaintiff explicitly disclaimed.

The Court of Appeals goes on to say (R., 650):

> "No one knows just why it is that no brand of cassava starch which Perkins could buy about 1908 could be used until after artificial degeneration, while defendant finds that some present regularly marketed raw starch makes a satisfactory base for the second step. It may be that changed methods of cultivation or manufacture have brought the viscosity down to the medium range; it may be that

peculiarities of defendant's dissolving operation take the place of Perkins' preliminary treatment."

The Court's uncertainty at this point deserves closer examination. There is some testimony in the record to the effect that modern cassava starches are less water-absorptive than the marketed cassava starches at the date of the Perkins invention, but none that such starches have the reduced water-absorptiveness of the range of the Perkins patent and none that the particular G. T. A. brand of cassava starch that defendant uses has had any such progressive natural degeneration; and the men who have been engaged in buying starch for the Kane Mfg. Co. and others who have been engaged in buying starch generally have not observed any such degeneration (R., 62). They certainly would have observed it if it had occurred since the price of starch on the market is measured by its water-absorptiveness, the higher the water-absorptiveness the higher the price (R., 405, 410).

The evidence to this supposed progressive natural degeneration is wholly that of plaintiff's expert, Dr. Grosvenor, and is not of so definite a character as to form the proper basis of the judgment of any Court. This whole matter is the best possible illustration of the wisdom of the rule asserted by this Court in the *Minerals Separation* case (250 U. S., 336, 350), where the Court said that to depart from the stated rule of the patent "would subordinate the clear description contained in it * * * to an implied and vague description and classification which would leave the whole subject again at large."

Dr. Grosvenor, discarding the tests of the patent, testified generally that certain marketed cassava starches have undergone progressive degeneration in some unexplained way, during the years subsequent to the Perkins invention; so that what Perkins meant by raw cassava starch when the patent was written is something different from what raw cassava starch now means.

The fact is, however, that the raw starch defendant now uses—G. T. A. brand—is the very raw starch Per-

kins attempted to use at Poplar Bluff and described (*ante*, p. 47) as:

> "Lot 80. This was raw G. T. A. cassava and not suitable for veneer glue."

Upon Perkins' rejection of this particular raw cassava, plaintiff rested its assertion that the Poplar Bluff prior use was not an anticipation of the patent.

Dr. Grosvenor makes the following statement, with regard to G. T. A. raw cassava (R., 71):

> "Q. What can you say of the trend of viscosity changes in the G. T. A. brand such as the defendant uses as testified this morning?
>
> A. G. T. A. is one that I have not been particularly familiar with. I have met a few samples but wherever I have seen the results of its use, the viscosity was medium. I don't know its history."

Still further, it is not pretended by Dr. Grosvenor that any of the commonly sold raw cassava starches on the market, much less the particular grade that defendant uses, has water-absorptive properties that fall within the range measured by the tests of the Perkins patent*

---

*See R., 70, where the average tests on a 20:1 boil up gave a viscosity never less than 46. Translated into the terms of the 9:1 test, this would be about 750 (R., 632, line 33). The upper limit of the Perkins range on the 9:1 test is 48. As to G.T.A. brand cassava, Dr. Grosvenor said indefinitely (R., 71) that he had met samples "somewhere near 30 and possibly 35" on the 20:1 test. This would be something like 180-270 at 9:1 (R., 632, line 38). Of the specific G.T.A. starch used as defendant's base here, Grosvenor gave the viscosity as 57 on the 20:1 boil up (R., 76, 78) which is too high to be measured at all in the 9:1 boil up. He said he had not sufficient data to compare the Perkins base with these ordinary raw starches (R., 77), but Mr. Grossman compared them by his standard viscosity determination and found that where water on that determination had a viscosity of 28 seconds, the Perkins base had a viscosity of 80 seconds, less than three times that of water, and defendant's base, 145 seconds, about six times that of water. (R 79)

Furthermore, as late as 1915, plaintiff was using ordinary commercial raw cassava starch dissolved in 3 parts of water and caustic to prove to Judge Sanborn that raw cassava starch would not make the Perkins glue (*ante*, p. 31).

It is no wonder that the Court of Appeals was uncertain as to the effect that changed methods of cultivation or manufacture might have had upon the viscosity of marketed cassava starches and that it could not decide whether defendant's production of starch glue that can be used in veneering, is dependent on that or upon peculiarities of defendant's dissolving operation that take the place of Perkins' preliminary treatment.

The fact is, as we have seen, that by more energetic and powerful and long continued stirring, in accordance with the Gerard and Dornemann patents, defendant is able to handle a heavy, tough and ropy glue that does not have the fluidity of the Perkins glue and to that extent that peculiarity of defendant's dissolving operation takes the place of Perkins' preliminary treatment. It does not produce the glue of the Perkins patent but it makes it possible to use in veneering the glue that Perkins rejected.

This again only illustrates the impossibility of measuring the degree of water-absorptiveness of Perkins' starting material, or of any starting material alleged to be the equivalent of Perkins' starting material, by reference to the finished product. If there is interposed between the starting material and the finished product a process step that does or may affect the quality or utility of the resulting material, it cannot be that either the quality or the utility of the resulting material measures the quality of the starting material.

The Court of Appeals then referred more specifically to the dicta of the Court of Appeals of the Second Circuit in the *Standard case* to the effect that if nature had evolved a substitute for Perkins' starting material it would be a controlling thing, and added:

> "The utmost effect of defendant's claim would be to make the situation the same as if the present base used by defendant, the Kane base, had been freely for sale in 1910 as it is today; and this is practically the situation created by the now conceded fact that Perkins' base product of his first step was old at the time of Perkins' work."

This assertion involves the assumption, contrary to the fact, that the Kane base defendant now buys is the Perkins base. Perkins said in his amended specification that there existed at the time certain grades of cassava starch that would answer his purpose, and perhaps such grades of cassava starch did exist at that time. If so they were characterized by a water-absorptiveness within the range measured by the tests of the Perkins patent. But the Kane base is not now and never has been a starch having that low water-absorptiveness.

Further discussing the question of sufficiency of invention in the subject matter of the Perkins patent, the Court pointed out that in former litigation it had been held that Gerson & Sachse had disclosed substantially Perkins first degenerating step and his resulting degenerated glue base, and said (R., 651):

> "Hence the question must be: 'Was there invention in taking this known starch base, which had the essential degree of viscosity, and making a real glue out of it, as Perkins for the first time did?' We see no sufficient reason for a negative answer."

Defendant here is not seeking a negative answer to that question. It was answered in the affirmative in the *Solva case,* and this defendant has not sought to attack that decision. But the "resulting glue-base" of the Perkins first degenerative step and of the Gerson & Sachse

patent was a starch having water-absorptive properties within the limited range measured by the tests of the Perkins patent, and defendant does not use such a starch.

In the next paragraph of the opinion the Court says (R., 652):

> "It is said that those who had used a high viscosity starch base with a small amount of water *had the right* to use any known quality of starch, and that those (like Gerson & Sachse) who had used starch of a medium range in viscosity, with large quantities of water, *had the right* to use any amount of water, more or less." (Emphasis by the Court.)

and rejects such an argument as ground for holding the Perkins patent invalid for lack of invention. Defendant here does not say anything of that kind. To say so would be to deny the correctness of the decision in the *Solva case*, and defendant agrees that for the purposes of the present case it may be assumed that it was invention to select, as Perkins did, a starch of particular water-absorptiveness and combine it with a particular quantity of water to make the glue of his patent. But that invention has not been used by this defendant.

With respect to the prior use at Poplar Bluff, the Court of Appeals said (R., 653):

> "The alleged public use by Perkins for more than two years was carefully considered in the Solva case (infra), and was held ineffective because it was composed of a series of efforts which did not pass out of the experimental stage into fully developed invention until less than two years before November, 1908. We see no occasion to reach any other result on that subject."

That was the holding of Judge Sanborn in the Solva case, but the Court of Appeals in that case said of the Poplar Bluff use (251 Fed., 70):

> "From the record it is fairly shown that in making certain changes in the glue and machinery, the result was satisfactory in that plant, and, indeed, it seems, as above stated, that the same glue is still in practically exclusive use there. It was used in such quantities and so generally that, whatever its use was, it was not an experimental use."

and saved the Perkins patent from invalidity by accepting plaintiff's differentiation of the Poplar Bluff glue made from untreated high water-absorptive starches from the glue of the Perkins patent made from starches of more reduced water-absorptiveness.

Coming to the discussion of the former litigation and of the disclaimer resulting therefrom, the Court says it "presents to our mind the most serious obstacle to plaintiff's case" (R., 645); and then the Court starts that discussion with an initial mistake as to what was charged to be an infringement and what was adjudicated with respect to infringement in the *Solva case.*

The Court said of the base charged to be an infringement in the *Solva case* (R., 655):

> "It appears that—to accept the defendants' argument—'the major portion' of defendants' output was raw cassava starch, just as is now the case (the present Kane base is used by the present defendant)."

We do not know what "defendants' argument" the Court here refers to. It is not true in any sense that "the major portion" of defendants' glue-base in the *Solva case* was untreated starch, and it is not true that any of it was raw cassava starch in the sense that it was, like the Kane base here involved, a starch having water-

absorptiveness higher than the range measured by the tests of the Perkins patent.

The fact is that the raw cassava starch involved in the *Solva case* was a particular and peculiar starch of low water-absorptiveness responding to the tests of the Perkins patent. That is explicitly set forth in the brief filed by plaintiff's counsel in the Court of Appeals in the *Solva case* as follows:

> "It appears that the defendant Solva Company had shipped some *particular and peculiar* cassava dry glue base to their customers, which they did not treat or process at all (Qs361-364, p. 645), and which did not need any processing as it did the same work as the regular Solva goods and behaved just like the processed goods when tested (Qs365-370, p. 646). Defendants tested it out first in the same way they did the processed goods (Qs373, 374, p. 646) and it tested the same (XQ467, p. 658). *It is clearly a brand of cassava, which in the milling or handling of it, has already become sufficiently degenerated.* It was evidently the same or the equivalent of the processed Solva, as they got no complaint from it (Q372, p. 646, XQ470, p. 659). This idea all originated with Perkins (Qs437-443, p. 655), and as hereinbefore pointed out, was fully contemplated by the reissue Patent 13,436 in suit." (Emphasis ours.)

The statement in the above quotation that this idea of the possibility of using a brand of starch which in the milling or handling of it has already become sufficiently degenerated "was fully contemplated by the reissued patent No. 13,436 in suit" exposes another error made by the Court of Appeals in the case at bar and vitally affecting its conclusion as to the scope of the Perkins patent and the effect of the disclaimer.

As we have seen, in discussing the Perkins patent (R., 649-650), the Court said:

> "So far from supposing that he must use his first step and carry it to a definite point was he that he said he could start the second step, though not as well, 'with certain grades of untreated cassava.' "

And with reference to the disclaimer, the Court said (R., 658):

> "The fair intent of this disclaimer as to the second step claims was, we should think, to limit them to a process where the material with which the process step begins is the less than high viscosity indicated by the teachings of the patent to be necessary to produce the result at which the second process step was aimed."
>
> • • • • • • •
>
> "The reference was not to the base which had degenerated in the manner specified in the patent,[3] but to one degenerated (or degenerate) to the extent so specified, and this must be interpretated in connection with the statement remaining in the specification, that the second step could be practiced, and the ultimate product obtained by commencing the second step with raw untreated cassava starch."

[3]As was by error said in one of the later decisions.

Thus the Court of Appeals, on the basis of the expression "certain grades of untreated cassava" inserted in the specification by amendment without oath after the patentee died, found that the scope of the patent extended beyond the range of degeneration fixed by the tests of the patent; that the Court of Appeals of the Seventh Circuit had so held in the *Solva case*, and that the

disclaimer was not intended to, and did not limit the patent to claims made from starch having water absorptive properties lying within that range.

We have seen (ante, p. 24) that unless this remark, added without supplemental oath, is to be interpreted in accord with the rest of the specification, it was a vital change therein and destroys the patent, since there is no oath to show that the inventor was or believed himself to be the inventor thereof.

We shall now proceed to show that this remark, so inserted in the specification after the inventor's death, was not understood by plaintiff (who inserted it), at that time or at the time the disclaimer was made, to extend beyond the limits of degeneration marked out by the tests of the patent. On the contrary, it was then understood to mean, and plaintiff asserted that it meant, that there might be found in nature certain grades of untreated cassava that had already been degenerated by special or peculiar method of manufacture or otherwise, to within that specified range.

The words "as hereinbefore pointed out" (ante, p. 71) in the foregoing quotation from plaintiff's brief in the *Solva case*, refer to the following statement found on pages 49-50:

> "It makes no difference how the starch is degenerated, provided it is degenerated to the right point. If the miller, in extracting the starch from the roots or other source and purifying it, employs chemical reagents which at the same time degenerate the starch, it may happen that some brands of starch found on the market need little or even no first step degeneration. If a starch be found in commerce already modified so that its viscosity *is two or three times that of water by the Perkins test*, then it may not be necessary to further modify it (p. 127, fol. 648; p. 495, fol. 1335). That such is the occasional

facts appears from the testimony. Now and then a brand of cassava is found that may be employed untreated (p. 134, fol. 660). It appears from the testimony of defendants' foreman that the defendants have to some extent used such a brand which did not need any processing or first step treatment, but it did practically the same work as the regular Solva glue of the defendants and behaved just like the processed goods when tested out in the same way as the processed goods are tested and defendants got no complaint from it (Qs361-374, pp. 645-656, XQ467, p. 658, XQ470, p. 659). Dr. Carmichael says that while this brand used by defendants would not be so good, yet it comes sufficiently near to the Perkins and defendants' regular product to be spreadable and make good strong wood joints (p. 158, fol. 705). This idea originated with Perkins (Qs437, 443, p. 655) and indeed is specifically mentioned in Reissue Patent in suit (p. 3, lines 78-83), where the inventor says:

> 'Thus, by proper adjustment of conditions of mixing, I am able to produce this glue even with certain grades of untreated cassava carbohydrates and with other starches and conversion products starchy carbohydrates),' "

and on page 85, as follows:

> "Defendants-appellants say that the original specification did not contain the statement that in some cases starch might be used for the second step of the process, just as found on the market. It goes without saying that if starch is found on the market which is already degenerated to the precisely desired point, then no further degenerating treatment

need be given it. By special or peculiar methods of manufacture some such starches are occasionally found on the market. But the original specification clearly contemplated such a possibility. For example, claim 15 of the original specification was for 'the treating of a starch with a solvent of cellulose to give it adhesive properties.' Here the purpose plainly was to cover a starch that might be found in the market already sufficiently degenerated. This, therefore, was not new matter."

It was upon the basis of that interpretation of this addition to the specification by amendment that the Court of Appeals in the *Solva case* said (251 Fed., 66):

"While the added matters may in a sense be new, we do not regard them of so important a character as to constitute that class of new matter, which would be invalid for want of an oath under the circumstances. They are related to the original purposes and objects set out in the original specification and claims, though some of them approach the border line."

It was in this sense that the words were interpreted by plaintiff's expert Dr. Grosvenor, who has testified as expert in these cases from the beginning, and who filed an affidavit directed to other questions than this new matter at the same time that the amendment was filed (R., 1102, 1119 and 1122-1125).

Dr. Grosvenor testified in the *West Michigan case* on October 28, 1919, as follows (stipulated into this case, R., 121):

"The patent points out, page 3, lines 80 to 83, that certain grades of untreated cassava carbohydrates

and other starches may be used without any preliminary treatment thereof. It would be perfectly obvious to a starch chemist, after Perkins pointed out that starch of low water absorptiveness is desired, that many raw starches more or less in the natural condition, can be used, but he points it out specifically. He found the difficulty, however, of specifically illustrating the proper choice of raw grades, and in order to make that a little more clear permit me to touch for just a moment upon the chemical constitution of starch."

Then Dr. Grosvenor interjected two pages of discussion on the chemical nature of starch, and (R., 123) concluded by saying:

"So that Perkins faced a great difficulty in telling which starch to select.

• • • • • • •

Perkins, in order to explain just the condition of the starch he desired to use gives us a specific sample (example) the taking of relatively high viscosity starches, or starches of high water absorptive power and degenerating them to the right point by a chemical treatment. He prefers to start with raw starches."

• • • • • • •

"At the same time as indicated, he clearly points out that once the character of base is known by carrying out that process he may take raw starches as he finds them in the light of that knowledge. The condition of the starch having been ascertained, the

> starch chemist would be able to select by comparing therewith various starches as found on the market, which would be suitable" (R., 124).

* * * * * * *

> "To aid in recognition of suitable starches degenerated to a suitable low water absorptiveness to make his glue, Perkins points out several tests" (R., p. 125),

which Dr. Grosvenor enumerates at length (R., 125-127) and says (R., 126):

> "There are many statements in the patent which not only indicate how far the starch should be degenerated if a preliminary treatment is necessary, but these tests indicate what kind of starches require no such preliminary degenerating treatment (because they are already in a condition where their water-absorptiveness has been reduced to the necessary degree, and they may have been formed in that condition) and may, therefore, be selected for use without preliminary treatment. Obviously the selection of the starch already suitable reduced in water-absorptiveness is equivalent to the preparatory treatment."

And (R., 130):

> "However, Perkins, realized it was not necessary to use any preliminary first step degeneration treatment becaues some starches come on the market with their water absorptive properties sufficiently reduced. He points this out on page 3, lines 78 to 83:

> " 'Thus by proper adjustment of conditions of mixing I am able to produce this glue even with certain grades of untreated cassava carbohydrates and with other starches and conversion products.'

And (R., 119-120).

> " 'The essence of the process technically consists in first selecting or producing, either by intermixture or chemical treatment, fermentation or otherwise, a starch of suitably low water-absorptive properties, and then dissolving it with about three parts of water or less and caustic soda to produce the homogeneous, viscous and fluid glue having substantially the properties of animal glue for veneering.' "

CONCLUSION.

We submit, therefore, that the decision of the Circuit Court of Appeals for the Sixth Circuit should be reversed and the case remanded with instructions to dismiss the bill of complaint as to the Kane base on the ground of non-infringement.

Respectfully submitted,

CHARLES E. HUGHES,
WILLIAM H. DAVIS,
JAMES A. WATSON,
R. MORTON ADAMS.

Office Supreme Court, U. S.
FILED
MAR 13 1928
CHARLES ELMORE CROPLEY
CLERK

IN THE

Supreme Court of the United States

OCTOBER TERM, 1927.

No. 285.

HOLLAND FURNITURE COMPANY,
Petitioner,

vs.

PERKINS GLUE COMPANY.

REPLY BRIEF FOR PETITIONER

and

APPENDIX OF OPINIONS.

CHARLES E. HUGHES,
WILLIAM H. DAVIS,
JAMES A. WATSON,
R. MORTON ADAMS,
of Counsel.

March 10, 1928.

GALLO & ACKERMAN, Inc., 142 Liberty Street, 'Phones—Rector 7257-8.

SYNOPTICAL INDEX.

PAGES

General Statement 1-2

(1) Confusion as to process and product is introduced by plaintiff's irrelevant discussion of preferred two-step process 3

(2) Defendant's position envisages the product independent of the process 3

(3) Deleting confusion as to process and product from plaintiff's brief, two statements emerge: 3-4

(a) "That Perkins attained his vegetable glue by using a starch not too far degenerated (i. e., not to soluble starch or dextrine)" dissolved in 3 parts or less of water and alkali;

(b) "That it was the use of the critically small amount of water with a suitable starch which resulted in the new good as animal glue for veneering."

The fallacy of proposition (a) above 5-8
The fallacy of proposition (b) above 8-30

The language of the claims 9
The prior art 11
The law 14

(4) Misinterpretation by plaintiff, and by the Court below, of the statement that "certain grades of untreated cassava carbohydrates" may be used 30-35

PAGES

(5) Plaintiff's erroneous assertion that defendant's glue is the same product as the Perkins glue ..35-37

(6) Certain other inconsistencies in plaintiff's brief..37-42

(a) Plaintiff's statement that no one satisfactorily glued together two pieces of wood with starch glue until Mr. Perkins did it 38

(b) The colloquy between Court and counsel in the Hood-Wright and West Michigan cases 38

(7) The erroneous assertion that the Courts that have sustained defendant's position limited the product claims to "Perkins' preferred two-step process" with chemical degeneration 42-46

Judge Geiger's opinion discussed in this regard 42

Decision of the Court of Appeals of the Seventh Circuit affirming Judge Geiger discussed in this regard 42

(8) The contention that the disclaimer cannot affect the product claims 46-48

(9) The opinion furnished to plaintiff by former Judge E. Henry Lacombe 49

INDEX OF CASES.

PAGES

American, etc., Co. vs. Mesta, etc., Co., 18 Fed. (2d) 538 28
Bene vs. Jeantet, 129 U. S., 683 ..... 21, 24
Carver vs. Hyde, 16 Pet., 513 19
Cochrane vs. Badische, etc., Fabrik, 111 U. S., 293 21
Cochrane vs. Deener, 94 U. S., 780 2
Corn Planter Case, 23 Wall., 181 ..... 5, 6
Corning, et al. vs. Burden, 15 How., 252 19
Electric R. Signal Co. vs. Hall, 114 U. S., 87 5
Fuller vs. Yentzer, 94 U. S., 288 30
Grant vs. Raymond, 6 Pet., 218 24
Hobbs vs. Beach, 180 U. S., 383 ..... 5, 47
Howard vs. Detroit Stove Works, 150 U. S., 164 24
Matheson vs. Campbell, 78 Fed., 910 ..... 25, 29
Minerals Separation, Ltd. vs. Butte, etc., Co., 250 U. S., 336 17
Mitchell vs. Tilghman, 19 Wall., 287 ..... 5, 29
O'Reilly, et al. vs. Morse, et al., 15 How., 62 18
Packing Co. Cases, 105 U. S., 566 48
Perkins Glue Co. vs. Gould Mfg. Co., and Wisconsin Chair Co., 280 Fed., 728; 292 Fed., 596; 263 U. S., 718 42
Perkins Glue Co. vs. Hood-Wright and West Michigan Furniture Co., 279 Fed., 454 ..... 6, 7, 38, 39
Perkins Glue Co. vs. Solva Waterproof Glue Co., 293 Fed., 792; 251 Fed., 64 ..... 6, 7, 8, 30, 31, 32, 33, 34, 38, 42, 43, 47, 48
Rubber Co. vs. Goodyear, 76 U. S., 788 ..... 47, 48, 49
Seymour vs. Osborne, 11 Wall., 516 29
The Incandescent Lamp Patent, 159 U. S., 465 ..... 22, 23, 24, 25
Tyler vs. Boston, 7 Wall., 327 ..... 20, 24
Western Electric Co. vs. Ansonia, 114 U. S., 447 48
Westinghouse vs. Boyden, 170 U. S., 534 ..... 5, 30
Wood vs. Underhill, et al., 5 How., 1 ..... 16, 24

IN THE

Supreme Court of the United States

OCTOBER TERM, 1927.

No. 285.

HOLLAND FURNITURE COMPANY,

Petitioner,

vs.

PERKINS GLUE COMPANY.

REPLY BRIEF FOR PETITIONER.

The simple issue of this case is confused in plaintiff's brief, as it is in the opinion of the Court below, by a discussion of process and product. Plaintiff reiterates again and again throughout its brief, and the Court below took the view, that defendant's contention is that the product claims of the patent are limited to process features. That is not defendant's position and was not defendant's position below.

Defendant's position is that Perkins' product cannot be identified by the use to which it is put or its ability to do the work of animal glue; that it is a chemical compound having defined properties derived from the chosen quality and quantity of its ingredients; that one of these ingredients is a starch having a certain degree of water-

absorptiveness; that this degree is determined by the tests of the patent; and that defendant does not infringe because it does not use starch coming within these tests.

Defendant further urges that this limitation is made clear and unequivocal by plaintiff's disclaimer. In discussing the effect of this disclaimer plaintiff (and the Court below) most strikingly confuses product and process. The claims from which the use of starch such as defendant uses was disclaimed, are not "process" claims in any further sense than that they call for the *selection of ingredients* and the disclaimer makes this *selection* definite by limiting it to a starch "degenerated to the extent specified in the patent."

A process is a mode of treatment of certain materials to produce a given result.* Where the result hinges on the *selection* of the materials rather than on the *mode of treatment*, claims defining the selection cannot logically be differentiated from claims defining the product resulting from the selection. The disclaimer did not limit the claim to a *method* of degenerating, but to *choosing* an ingredient of a specified *degree* of degeneration. It was in very intelligible sense a *product* limitation. The thing covered by the "second step" claims as amended by disclaimer and the thing covered by the product claims now sued on,—the only thing covered by either of them—is the use of a starch having water-absorptiveness (degeneration) within the defined range together with three parts or less of water and caustic (D. B., 58-59 and cases cited—and *post*, pp. 47-48).

We believe there are other confusions of this simple issue arising from error and loose use of terms in plaintiff's brief, and because we feel that the Court below was led into error by these same confusions, we shall now take them up in some detail:

---

*Cochrane vs. Deener, 94 U. S., 780.

(1) Plaintiff's statement of the case is confused by unnecessarily bringing into it Perkins' "preferred two-step process," wherein "starch is treated in a first step with chemicals to degenerate it" (P. B., 3).* Plaintiff's counsel misstate defendant's position when they say defendant contends that the glue product claims are limited to this preferred two-step process (P. B., 3).

(2) Correct statement of defendant's position, elaborated in our main brief, is this: The glue product disclosed in the patent and covered by the product claims is a chemical combination of two elements individually old—(1) a glue-base of specified water-absorptiveness, and (2) a solvent consisting of caustic alkali and a stated quantity of water. Defendant's glue is not the glue product of the patent. It has not the essential glue-base ingredient of the patent, and consequently has not the ample fluidity imparted to the glue product of the patent by the quality of that essential ingredient. Defendant tolerates the less fluid glue that Perkins rejected, using heavier machinery to handle it (D. B., 3, 7, 26, 47, 61, 63, 64, 66, 67, 69—and *post*, pp. 35-37).

There is no need to bring into the discussion any process of degeneration since only the product claims are here involved, and defendant's glue-base is an ordinary untreated starch which has not been subjected to any degenerating process whatever (R., 48, 49, and P. B., 92-93).

(3) We may delete so much of plaintiff's argument as is based upon the irrelevant discussion of the two-step process involving chemical degeneration.**

---

*We use the abbreviation "P. B." to refer to plaintiff's brief, and "D. B." to refer to defendant's main brief, in this Court.

**The extent of this is more fully pointed out, post, pages 13, 42-49.

We then find in plaintiff's brief the following propositions:

(a) **"That Perkins attained his vegetable glue by using a starch not too far degenerated (i. e., not to soluble starch or dextrine)" dissolved in 3 parts or less of water and alkali** (P. B., 3).*

(b) That "it was the use of the CRITICALLY SMALL AMOUNT OF WATER with a suitable starch which resulted in the new good as animal glue for veneering" (P. B., 121; emphasis theirs).

Those propositions are not in terms directed to the disclosure of the patent—to the thing described and claimed within the four corners of that document. They are irrelevant if defendant is right in saying that the glue patented is a chemical combination of which one essential element is a starch base of reduced water-absorptiveness within the range measured by the tests of the patent. They are irrelevant if defendant is right in saying that the thing disclaimed is glue made with 3 parts or less of water and caustic alkali applied to starch other than a "starch or starchy product or carbohydrate * * * degenerated to the extent described in said Letters Patent" (D. B., 41-47).

---

*This proposition (a)—that the starch ingredient of the glue product is "any starch not too far degenerated (i. e., not to soluble starch or dextrine),"—although urged upon, was not accepted by, the Court of Appeals of the Sixth Circuit, which said (D. B., 57, R., 646):

> "Perkins **lessened the capacity of the starch molecules for water absorption,** but was careful not to carry the treatment far enough to change the starch into dextrine or to dissolve it." (Emphasis ours.)

But to analyze a little further these two propositions (a) and (b), let it be noted that proposition (a) differs from proposition (b) in this: In proposition (a) the glue-base of the patent is defined as "a starch not too far degenerated (i. e., not to soluble starch or dextrine)." In proposition (b) the glue-base of the patent is defined as "a suitable starch" which, with the stated amount of water, will result in glue "as good as animal glue for veneering." Proposition (a) rests upon identifiable qualities of the chemical constituents of the glue product. Claims of that scope would not be open to the objection that they cover mere function, principle or result. They would be valid product claims if they defined the real invention disclosed in the patent.* Proposition (b) rests not upon identifiable qualities of the constituent ingredients of the glue product, but upon availability of the final product for use. Claims of that character, if they existed in the patent, would be invalid for that reason (*post*, p. 14).

The Fallacy of Proposition (a) Above.

More specifically with respect to proposition (a) let it be noted that the liberal terms of the product claims in suit identify the first ingredient of the product merely as starch ("cassava carbohydrate" claim 28, "starch carbohydrate or its equivalent" claim 30, "amylaceous material as a base" claim 31). They are insufficient as they stand to define either the actual selection described in the patent or the partial selection defined in proposition (a) above. Validity of these product claims can be arrived at only by reading into the words defining the starchy

*Corn Planter Case, 23 Wall., 181; Electric R. Signal Co. vs. Hall, 114 U. S., 87; Hobbs vs. Beach, 180 U. S., 383, 400; Westinghouse vs. Boyden, 170 U. S., 534; Mitchell vs. Tilghman, 19 Wall., 287, 391.

component of the patented product a meaning consistent with the disclosure of the specification—a starch having water-absorptiveness within the defined range of the patent, not too high as well as not too low. That, and that only, is permitted by the liberal rule of the cases just cited* expressed, for example, in the *Corn Planter Patent case* in the words:

> "The first of these claims, if construed simply as claiming the placing of the seed-dropper on the machine, would probably be void, as claiming a mere result, irrespective of the means by which it is accomplished. But if construed as claiming the accomplishment of the result by substantially the means described in the specification, it is free from that objection; and we ought to give a favorable construction, so as to sustain the patent if it can fairly be done."

Further, with respect to proposition (a), we point out that when plaintiff now defines the starch ingredient of the patent as "starch not too far degenerated (i. e., not to soluble starch or dextrine)," it not only ignores the disclosure of the patent which insists that the starch must *also be degenerated far enough* (D. R., 19-20, R., 247, lines 68-74, R., 249, lines 84-89), but it makes a complete reversal of its statement of the invention upon which the claims were sustained in the *Solva case*, and were applied in the *Hood-Wright* and *West Michigan cases;*** and it continues to insist upon a position which the opinion written by Judge Dennison of the Circuit Court of Appeals of the Sixth Circuit rejected (*ante*, footnote, p. 4).

When plaintiff now says, in perfect contradiction of what it said in the *Solva case*, that starch degenerated to any point short of soluble starch or dextrine falls

---

*And see post, pages 16, et seq. and 29.

**See post, pages 38-41.

within the range of degeneration specified by Perkins; defendant answers in the very words plaintiff's counsel used in the *Solva case*, that the range specified by Perkins is a certain more limited range within that broad field—a range excluding **under-degenerated starch as well as over-degenerated starch.***

The clear-cut issue, whether (1) the stated quality of the glue-base and (2) the stated quantity of dissolving water are necessary to the glue of the patent, is not met by defining the glue-base as "a starch not too far degenerated (i. e., not to soluble starch or dextrine)." That definition proceeds in the right direction, but it does not proceed far enough. We think it is impossible for anyone who reads the patent or studies the facts in this case to avoid the conclusion, first, that a selection of starch is necessary, and, second, that the selection of starch must avoid under-degeneration (excessive water-absorptiveness), as well as over-degeneration.

In the face of the patent, with its expressed discarding of ordinary untreated starches as too highly water-absorptive and its insistence on the necessity for reduc-

---

*See quotation from plaintiff's brief in the Solva case (D. B., 33) where plaintiff insisted that the range of degeneration specified by Perkins is not the broad range of starch degenerated to any point short of soluble starch or dextrine, but is narrower, excluding also UNDER-DEGENERATED STARCH; and the quotations from plaintiff's memorandum on motion for rehearing (R., 352-353, D. B., 37-39) where the plaintiff described the decision of the Court of Appeals in the Solva case as founded upon the proposition that the second step alone would not produce "the 'starch glue as good as animal glue and suitable for veneering' covered by claims 28 and others * * * if, for example, applied to the UNDER-DEGENERATED STARCH SUCH AS RAW STARCH or to an over-degenerated starch such as dextrine." (See also the statement of plaintiff's position in the Hood-Wright and West Michigan cases, post, pp. 38-41.)

tion of water-absorptiveness, everything plaintiff's counsel say in support of this proposition (a) above must be unconvincing.

It is defendant's belief that in the face of the disclaimer, which explicitly limited the selection of this ingredient to the range of degeneration described in the patent, plaintiff is estopped to advance this proposition (a).

And certainly, in the light of what they said in the *Solva case*, they will fail to convince this Court, as they failed to convince the Court of Appeals of the Sixth Circuit, that the glue of the patent can be defined merely by limiting the choice of the glue-base to starches that have not been over-degenerated to soluble starch or dextrine. As plaintiff's counsel themselves expressed it in their brief in the *Solva case* (P. B., 33) it "is not the case" that "a starch degenerated to any point short of the soluble starch or dextrine stages falls within the range of degeneration specified by Perkins."

It is clear, therefore, that we may delete so much of plaintiffs' argument as is based upon the proposition (a) above.

The Fallacy of Proposition (b) Above.

More specifically with respect to proposition (b) above, we note that it is in effect the proposition upon which the Court of Appeals of the Sixth Circuit decided the case in plaintiff's favor. Here lies the sharp issue of the case. Was that Court right or wrong when it defined the scope of the patent by the functional limitation "as good as animal glue for veneering"?

That issue is discussed in our main brief (D. B., 21, and cases cited, 24-25, 61-64 and 73-78). In reply to plaintiff's discussion of that issue, we add the following.

The Language of the Claims.

On this proposition (b), as on the proposition (a), it is not possible for plaintiff to stand on the literal terms of the claims. It is not necessary that they should, since the terms of patent claims are to be interpreted not literally but reasonably in the light of the specification, to define the real invention. But we mention the fact that the literal wording of these claims does not support plaintiff's position because again and again in their brief, plaintiff's counsel assert that it does; pretend to stand upon the literal wording of the claims, and challenge the court to hold the claims invalid if the literal wording is not sufficient to define the product that is Perkins' invention (P. B., 9, 132, 136, 139, 152, 153, 168 and 172). The product claims in suit specify, to be sure, the "critically small amount of water" that is an element of the product invention as defined by plaintiff in proposition (b); but they do not define the "suitable starch." The actual words of the claims identifying the starch are "cassava carbohydrate," claim 28; "a starchy carbohydrate or its equivalent," claim 30; and "amylaceous material as a base," claim 31. If we turn, as plaintiff would have us do, to words defining the utility of the final product with the idea (erroneous, as we shall point out) that words defining the utility of the final product can be made to take the place of proper words defining the ingredients—and so adequately define the "suitable starch," we do not find in any of these claims the words "good as animal glue for veneering." Claim 28 defines the finished product as a glue "having substantially the qualities of animal glue" broadly. Claim 30 defines it as "a wood and fiber glue" broadly, and claim 31 defines it as "a wood and fiber glue * * * viscous, semi-fluid and unjellified." Nor does the specification of the patent anywhere define the glue as "as good as animal glue for veneering." When plaintiff's counsel, realizing that some choice of suitable glue-base is essential to the invention, look to the patent

to find how to make the choice, they cannot find there any instruction to choose a base that will make "as good as animal glue for veneering."*

They say (P. B., 96 and 157) that "the critical test for determining whether the base is suitable, if any, seems to be the one referred to at page 4, line 42, of the patent where it says the base is one which

> " 'may be formed into glue by using only from 1 to 3 parts of water.' "

That is evidently a much broader test than the "good as animal glue for veneering" that plaintiff feels impelled to limit the claims to. The literal wording of the claim does not substantially narrow the functional criterion so stated in the specification, or bring it, by literal definition even of the ultimate properties of the final glue, within plaintiff's range of safe distinction from the prior art. Even from plaintiff's wholly unsound point of view that a functional definition is legally sufficient, they find it necessary to read into the claims the whole function "as good as animal glue for veneering," which is not expressed literally either in the claims or in the specification.

Moreover, the evidence shows that the Perkins glue was not as good as animal glue for joint work (D. B., 57, R., 142, 144, 225) and the real significance of bringing in the words "for veneering" is that according to Perkins' ideas, the glue for veneering (that is to be handled on veneering machinery) must have the ample fluidity imparted to it by the reduction of the water-absorptiveness of the base—a degree of fluidity that defendant's glue does not possess because it is not made from the starch of reduced water-absorptiveness (D. B., 3, 7, 47 and post, pp. 35-37).

---

*That if the disclosure rested upon such a yardstick to determine the choice the patent would be wholly invalid (see post, p. 14).

The Prior Art.

Still further, the claims, literally interpreted, are invalid in view of the prior art. Take first the prior use at Poplar Bluff. Plaintiff's counsel agree that the object there sought was a glue as good as animal glue, but say this object was not there attained (P. B., 60). Why was it not attained? The making of starch glue by dissolving ordinary untreated starch (not weakened in strength by degeneration to soluble starch or dextrine) —by dissolving such starch in water and caustic alkali in power-driven mixing machines with violent agitation— was well known in making up Gerard's apparatine and in the disclosure of the Dornemann patent (D. B., 8-12). The condition that a small quantity of water should be used, less than 3 parts of water to the weight of the dry glue, was well known. It was a condition imposed by the practice with animal glue in the wood veneering industry. Clearly nothing stood in the way of mixing these ordinary starches with 3 parts or less of water in these well-known power driven mixing machines. There was no novelty or invention there. But the difficulty was, as Perkins says in his patent, that the dissolving step applied to that kind of starch produced a glue jellylike and tough—too heavy to be as good as animal glue for veneering. That ordinary starch was not suitable to his purpose, and he was not satisfied with it. The glue so made was so heavy that it broke the agitators and would not flow through the pipes to the mixing machines (R., 681, P. B., 15). But by using slightly more water, they got a glue that they could handle, and it was used continuously at Poplar Bluff in making barrel heads for more than two years prior to Perkins' application (D. B., 14-16, and see the contemporaneous correspondence which shows that this glue was continuously and satisfactorily used, R., 915-987).

Being dissatisfied with this glue, which certainly was made in accordance with the disclosure of these prior art patents, Perkins proceeded with the selection of "suitable starch" that he subsequently patented. That selection involved reduced water-absorptiveness, and the question was—how far reduced? Perkins answers that question in his patent. A choice being necessary to the purpose and fundamental basis of his invention it was incumbent upon him to answer in his patent the question how to choose.* His answer was that you must choose a starch degenerated far enough but not too far as determined by the tests which the patent was reissued to amend.

We may, therefore, also delete so much of plaintiff's argument as is based upon the suggestion that the literal wording of the claims is sufficient to define the invention, and the corollary that because the literal wording of the claims embraces defendant's product there must be infringement. In that way we get one step closer to the real issue. And here let it be noted that when the learned Judge who wrote the opinion of the Court of Appeals of the Sixth Circuit was discussing the scope of the claims as affected by the disclosed tests of the patent (R., 649-650) he agreed that (R., 649):

> "to make operative and intelligible, there is an implied limitation to that base which, when combined as stated, will give the result stated. In other words, out of the variety of starchy carbohydrates we must select one suitable for this combination."

---

*It was in recognition of this essential requirement that plaintiff surrendered and reissued the original patent which it represented to be "inoperative or invalid" for the reason that the original disclosure of the way to choose the "suitable starch" was incomplete (D. B., 22-23).

It was in holding that this necessary selection was sufficiently defined by the utility of the resulting product that the Court of Appeals erred on the fundamental issue of the case.

There is no doubt that the confusion introduced by irrelevant discussion of the two-step process involving chemical degeneration of the starch base contributed to mislead the learned Judge who wrote the opinion of the Court of Appeals of the Sixth Circuit to so extend the scope of the patent and to so limit the scope of the disclaimer, as to bring defendant's glue within the supposed monopoly (see D. B., 58-59).

The Court, after rejecting the idea that the lessening of the capacity of the starch molecules for water-absorption had to be effected by any particular process (an idea that defendant did not advance there and does not advance here) passed over the true measure and identification of the patented glue—the fact stated so elaborately in the specification that it rested (even where all process considerations are laid aside) upon the right selection of ingredients—and proceeded to measure the degree of lessened water-absorptiveness necessary to the glue-base of the patent by reference not to the glue-base itself, but to the final product. The Court used as a yardstick, not any ingredient of the patented compound or any chemical or physical characteristic imparted to it by the chosen ingredients; but the availability for use of the finished glue as expressed in the words "as good as animal glue for veneering" (D. B., 62-63). Thereby the Court, accepting neither plaintiffs' nor defendant's contention as to the chemical constituents necessary to the glue of the patent, gave to the patent an interpretation which makes it cover not the product but the purpose of the Perkins invention.

The Law.

To give plaintiff a patent, regardless of the degree of degeneration (P. B., 30, 154) that Perkins in his investigations subsequent to his work at Poplar Bluff found to be necessary to the achievement of the result he was aiming at, is to give it a patent, not for the invention Perkins then made—the means of achieving his result,—but for the result itself. It is, of course, elementary that a patent cannot be granted for a result. The real danger arising out of defendant's proposition here is that, because of the confusion introduced into the discussion of it, this Court will be led to a conclusion essentially violative of that principle; thereby establishing a precedent that will introduce great confusion into the patent law.

That disturbance of the established rules of patent law certainly exists in the *thing decided* by the Circuit Court of Appeals of the Sixth Circuit in the case at bar. Considering the case as a precedent, we are not concerned with the reasoning of that Court, but rather with the thing decided, and it is for that reason that we are extending this reply to plaintiff's brief to avoid, if possible, any such confusion as we believe to have existed in the mind of the Judge who wrote the opinion below. That opinion (R., 649) starts its discussion of this particular point by saying that defendant contends that the product claims "imply a limitation by starting with the product of the first step." It is now clear that defendant's contention is only that the glue product must contain a starch base selected from the range of water-absorptiveness defined in the patent. With that understanding—and it is essentially involved in the adjudication even though the Court did not clearly apprehend it—let us consider the following remarks of the Court. The Court says:

> "* * * there is an implied limitation to that base which, when combined as such, will give the result stated. In other words, out of the variety of starchy carbohydrates, we must select one suitable for this combination. In this there is no forbidden vagueness, for the specification teaches that starch is suitable when its water-absorbing capacity is not too high nor too low, but is in what we may call for convenience the medium range."

It is true that there is no forbidden vagueness and no disturbance of the established rules of patent law as to sufficiency of disclosure if the specification teaches that the selection must be made from a medium range and definitely discloses what that range is. The specification does so teach. But the dangerous effect of the decision of the Court of Appeals is that, in measuring the scope of the patent, it measures that "medium range," not by the limits put upon it in the specification, but by the functional consideration of ultimate result.

If this Court affirms that decision, the case will stand as a precedent for the proposition that an inventor who by the selection of materials first produces a product satisfying a pre-existing want, can have a monopoly extending beyond his range of selected materials to cover products subsequently made from materials not within that range. The effect of the case cannot be concealed by the fact that the patent claims specify definitely the limitation of the quantitative field of choice of one of the ingredients—water. The defect of the claims, as plaintiff and the court below interpret them, is that with respect to the other ingredient—starch—the range is not limited to the kind of material Perkins chose; and to that extent goes beyond the invention he actually made. It will therefore result that the door will be opened to a relaxation of the well-established and necessary prin-

ciple that a patentee is entitled to patent not the result he achieves but only the means he discovers for achieving it.

That is the principle of the cases cited in our main brief in the footnote to page 21. Plaintiff's discussion of those cases (P. B., footnote, 154-156) does not meet the issue. Plaintiff discusses the cases in supposed application to what is indeed a "false issue" (P. B., 154) which plaintiff attributes to defendant erroneously. It is *not* defendant's contention "that the invention in issue is the production of a base of 'a particular degree of degeneration' instead of starch veneering glue" (P. B., 154); and the mere expression "instead of starch veneering glue" (P. B., 154) here used by plaintiff's counsel, shows the true scope that they are asserting for the patent. They are in fact asserting that their patent covers "starch veneering glue" however made, and strange as it may seem, the practical effect of the decision of the Court below is to give them a patent of that scope.

The principle referred to is also the principle of the cases cited in the footnote (ante, p. 5). In fact, if the partial limitation of the claims to glue made from a starch "not degenerated to soluble starch or dextrine" —in accordance with plaintiff's proposition (a) above— is insufficient to save the claim from invalidity because it covers more than the patentee invented, it must follow that the less direct—more functional—limitation of the claims by the yardstick "as good as animal glue for veneering" is insufficient.

From the earliest date it has been established that the specification of a patent on a new composition of matter must describe the ingredients, their qualities and proportions, with certainty. Thus, in the early case of *Wood* vs. *Underhill, et al.*, 5 How., 1, this Court said (p. 5):

> "But when the specification of a new composition of matter gives only the names of the substances which are to be mixed together, without stating any relative proportion, undoubtedly it would be the duty of the court to declare the patent void. And the same rule would prevail where it was apparent that the proportions were stated ambiguously and vaguely."

In that case the Court found that the proportions were fairly stated and held that the defendant infringed by using the equivalent of the stated proportions. It is equally true that in the patent in suit the quality is fairly stated, and defendant would infringe if it used a starch of the stated quality. But it does not.

This rule that the quality and proportion of necessary ingredients must be stated without ambiguity, and its corrolary that the patent is limited to the stated range of quality and proportions, has never been departed from and has recently been applied in *Minerals Separation* vs. *Butte, etc., Co.*, 250 U. S., 336. In that case the invention depended upon the selection of a particular quantity of oil (1% on the weight of the ore). The invention was one of the greatest merit. Defendant used more than 1% of oil. The Court held there was no infringement. Although the patent defined the invention by the *quantity* of oil the *quality* of oil was also involved in the decision. Plaintiff's contention there rested upon the proposition that although more than 1% of oil was used, yet some of the oil mixture was a kind of oil that was not the oil of the patent, and that consequently the defendant actually used less than 1% of the oil of the patent. To determine what was the quality of oil defined in the patent the Court looked at the specification, and said (p. 350):

> "To give such a construction to the patent would subordinate the clear description contained in it of what are oils of the process, to an implied and vague description and classification, which would leave the whole subject again at large, to become a field for further experimentation, without definition in the patent of what oils or froths would satisfy it. So interpreted the patent could not reasonably be said to contain a disclosure of the discovered process in the 'full, clear, concise, and exact terms' required by law (Rev. Stats., Sec. 4888) and the claims might conceivably be said to fall short of 'particularly pointing out and distinctly claiming' any discovery at all within the meaning of the act of Congress."

That the principle of this case is a salutary one and that it ought to be applied in the case at bar is well illustrated by plaintiff's discussion (P. B., 92-97) under the heading "Defendant's Base is Degenerated," and by the testimony there referred to (see post, pp. 35-37).

In *O'Reilly* vs. *Morse*, 15 How., 62, at page 112, the Court, referring to the eighth claim of the patent, said:

> "It is impossible to misunderstand the extent of this claim. He claims the exclusive right to every improvement where the motive power is the electric or galvanic current, and the result is the marking or printing intelligible characters, signs, or letters at a distance,"

and held the claim invalid because it covered a principle or result. So in the case at bar the claim, as plaintiff would interpret it, covers every improvement where the material used is starch with three parts of water and alkali and the result is glue as good as animal glue for veneering; it being admitted that certain starches

dissolved in that amount of water and alkali will not produce glue as good as animal glue for veneering.

In *Corning, et al.*, vs. *Burden*, 15 How., 252, there was an equivocal claim that might have been interpreted to cover either a process or a machine. The Court defined the meaning of the term "process," pointing out what sort of processes are patentable, and saying that when the term "process" "represents the function of the machine, or the effect produced by it" (p. 268), it is not patentable, and said (p. 269):

> "His patent, having a title which claims a machine, and his specification describing a machine, to construe his claim as for the function, effect, or result of his machine, would certainly endanger, if not destroy, its validity. His claim cannot change or nullify his previous specification with safety to his patent. He cannot describe a machine which will perform a certain function, and then claim the function itself, and all other machines that may be invented to perform the same function."

So in the case at bar the patentee cannot describe a starch glue that will have the properties of animal glue and then claim all starch glues that have those properties; or even all starch glues made with 3 parts of water and alkali that have those properties, since starch glues may be made with 3 parts of alkali that do not have those properties.

In *Carver* vs. *Hyde*, 16 Pet., 513, the invention involved was a mechanical improvement on the cotton gin. The Court said (p. 519):

> "Now the end to be accomplished is not the subject of the patent. The invention consists in the new and useful means of obtaining it. And if the defendant had * * * made an improvement which

> more effectually secured the object intended to be accomplished by the plaintiff's patent, it would be difficult to maintain that it could not be lawfully used, because it produced the same result with the plaintiff's invention."

In *Tyler* vs. *Boston*, 7 Wall., 327, the Court said (p. 330):

> "* * * a discovery of a new substance by means of chemical combinations of known materials is empirical and discovered by experiment. Where a patent is claimed for such a discovery, it should state the component parts of the new manufacture claimed with clearness and precision, and not leave the person attempting to use the discovery to find it out 'by experiment.'"*

The patent there stated the proportions and the trial Court had charged that whether defendant's compound used substantially those proportions was a question for the jury. The jury found for defendant and the judgment was affirmed. The effect of the decision was, of course, to hold that the scope of the monopoly was limited to a compound having equivalent ingredients as measured by the disclosure of the patent. The invention was a compound of oils for illuminating purposes and the case necessarily involved the holding that infringement could not be predicated upon the mere finding that defendant's product was a good illuminating mixture.

---

*In the case at bar plaintiff's counsel admit that when once you depart from the tests of the patent the only way a particular starch will make a glue as good as animal glue for veneering is to make up the glue and try it, and they say that no

(*Footnote continued on next page.*)

In *Cochrane* vs. *Badische, etc., Fabrik*, 111 U. S., 293, it was held that (p. 310):

> "Every patent for a product or composition of matter must identify it so that it can be recognized aside from the description of the process for making it, or else nothing can be held to infringe the patent which is not made by that process."

The basis of that holding was that to give a broader interpretation to such a product claim would cover a wider scope than the actual invention (p. 313). It must be equally true, for the same reason, that a patent for composition of matter mus' identify it so that it can be recognized aside from the description of its field of use. Otherwise the patent covers other means, not invented by the patentee, of arriving at the same result.

In *Bene* vs. *Jeantet*, 129 U. S., 683, there was a claim for a product defined as "hair of fine texture produced from any grade of coarse hair, either animal or human, by the method of refining, substantially as herein described" (p. 685). The Court said (p. 686):

> "The only fact upon which the plaintiffs relied was, the correspondence of the articles proved to have been sold by defendant, in respect of smoothness, lustre and pliability, with the hair produced according to the patented process; which correspond-

---

laboratory tests but only a factory test is sufficient for that purpose. They say (P. B., 29):

> "To determine whether any starch glue has substantially the properties of animal glue for veneering, the best and probably only satisfactory test is to try it out on a commercial scale in a furniture veneer gluing factory. No laboratory test seems to be sufficient * * *."

> ence, it was contended, showed that both products resulted from the same method or equivalent method of preparation,"

and (p. 686):

> "The broad construction claimed for this patent as a pioneer and foundation invention in the art of refining hair cannot extend the rights of the patentee beyond the compositions of matter and processes which, as stated in the patent, embody his real invention."

In *The Incandescent Lamp Patent* case, 159 U. S., 465, the Sawyer-Man patent related to the making of incandescent lamp filaments from carbonized paper. The third claim (p. 468) reading:

> "3. The incandescing conductor for an electric lamp formed of carbonized paper, substantially as described,"

was sustained on the basis of a specification which disclosed the making of incandescent electric lamp filaments from carbonized paper. But the patent contained claims not limited to carbonized paper of which claim 1 is a sufficient example (p. 468):

> "1. An incandescing conductor for an electric lamp, of carbonized fibrous or textile material and of an arch or horseshoe shape, substantially as hereinbefore set forth."

The defendant made incandescent lamp filaments from carbonized bamboo. Plaintiff contended that it was entitled to monopolize the use of all fibrous and textile

materials for the purpose of making incandescent lamp filaments. The Court said (p. 472):

> "If the patentees had discovered in fibrous and textile substances a quality common to them all, or to them generally, as distinguishing them from other materials, such as minerals, etc., and such quality or characteristic adapted them peculiarly to incandescent conductors, such claim might not be too broad."

So here, if Perkins had discovered in starches generally the quality of making glue as good as animal glue when dissolved in 3 parts of water and alkali, the claim as plaintiff interprets it, might not be too broad. But the fact is that not all starches have that property. In the *Incandescent Lamp Patent* case, the Court went on to say (p. 472):

> "If, for instance, minerals or porcelains had always been used for a particular purpose, and a person should take out a patent for a similar article of wood, and woods generally were adapted to that purpose, the claim might not be too broad, though defendant used wood of a different kind from that of the patentee. But if woods generally were not adapted to the purpose, and yet the patentee had discovered a wood possessing certain qualities, which gave it a peculiar fitness for such purpose, it would not constitute an infringement for another to discover and use a different kind of wood, which was found to contain similar or superior qualities. The present case is an apt illustration of this principle. Sawyer and Man supposed they had discovered in carbonized paper the best material for an incandescent conductor. Instead of confining themselves

to carbonized paper, as they might properly have done, and in fact did in their third claim, they made a broad claim for every fibrous or textile material, when in fact an examination of over six thousand vegetable growths showed that none of them possessed the peculiar qualities that fitted them for that purpose. Was everybody then precluded by this broad claim from making further investigation? We think not."

Plaintiff in its brief (P. B., 165) dismisses this case with reference to that portion of the opinion (p. 474) where the Court said that Section 4888, R. S., requires a definite and certain description; as though the *Incandescent Lamp* case dealt only with the question whether the patent was invalid for lack of sufficient description. But there was no doubt in that case that the description of the patent was sufficient, because the third claim was sustained. The question before the Court was whether the patent could be interpreted to cover all successful incandescent lamp filaments made from fibrous and textile substances of any kind, and the Court held that it could not be so interpreted. The Court cited (pp. 474-5) *Grant* vs. *Raymond*, 6 Pet., 218, 247; *Wood* vs. *Underhill*, 5 How., 1, 5; *Tyler* vs. *Boston*, 7 Wall., 327, 330; *Bene* vs. *Jeantet*, 129 U. S., 683; *Howard* vs. *Detroit Stove Works*, 150 U. S., 164, 167, and certain lower court cases to the effect that the disclosure must be made with sufficient certainty to enable persons skilled in the art to practice the invention without experiment and went on to apply that principle (p. 45) to the patent under consideration. The Court pointed out that an examination of fibrous and textile substances generally carried on for months revealed nothing that seemed to be adapted for the purpose. So in the case at bar Perkins' work at Poplar Bluff with heavy starches carried on for a long time re-

vealed no starch that answered his purposes; although it did reveal starches that made usable wood working glue with a slightly larger quantity of water. Ultimately he found a particular range of degeneration that, with the desired quantity of water, would produce the desired glue just as Sawyer-Man discovered that carbonized paper would produce satisfactory incandescent lamp filaments. But in the *Incandescent Lamp Patent* case the Court said (p. 476):

> "Under these circumstances, to hold that one, who had discovered that a certain fibrous or textile material answered the required purpose, should obtain the right to exclude everybody from the whole domain of fibrous and textile materials, and thereby shut out any further efforts to discover a better specimen of that class than the patentee had employed, would be an unwarranted extension of his monopoly, and operate rather to discourage than to promote invention."

In *Matheson* vs. *Campbell* (C. C. A., 2nd), 78 Fed., 910, the patent in suit covered the manufacture of a black dye from coal tar. The patentee showed a special process for making it from one compound out of a general group and claimed the product if made from any others of this general group. The evidence showed that most of the compounds in the general group when treated according to the patentee's process would not produce the black dye. The Court, commenting on this, said (p. 915):

> "In other words, having himself experimented only with three or four bodies out of a group of hundreds, he [the patentee] proposes to set himself in the pathway of future experimenters with any or

all of the other bodies, and, as the result of each new experiment is disclosed, will fire away at it, calculating to 'hit it if it is a deer, and miss it if it is a cow.' "

The Court further said (p. 916):

"The inventors did not make any such 'broad discovery.' They made the specific discovery that some di-sulpho acids, treated according to their process, would produce their product. The broad discovery that all sulpho acids may be thus transformed they certainly did not discover, for it is apparently undiscoverable, since most of them cannot be thus transformed by the process of the patent. Some future experimenter will have to make some new discovery, and invent some new process, before these other sulpho acids can be transformed into naphthol-black. We are referred to no authority, and know of no principle, which will sustain the complainant's contention that he can thus, in the language of the circuit court, 'speculate on the equivalents of his claimed invention, and thereby oblige the public to resort to experiments in order to determine the scope of the claims of his patent.' "

The Court, however, did not put its decision on this basis but rather on that of non-infringement. It said (pp. 917-918):

"It must be borne in mind that, in the practical determination of questions of alleged infringement, the problem is very different when we are dealing with a chemical compound than it is when we are dealing with a machine. Such observation as the eye can give to the machine at rest and in action, illuminated by a comparison of the co-ordination of

its parts with that of like parts in other machines, will be ordinarily sufficient to determine its classification. Far different is it with a chemical compound. No mere observation by the eye, supplemented even by the taste and touch, can go very far towards a solution of the problem. The same mysterious forces through whose action and reaction the compound was produced must be availed of to disintegrate and disrupt, before there can be any assurance of what it is we have before us. Hence it is that so-called 'tests' are devised by those skilled in the art and science of chemistry, which, in their opinion, as experts, will reveal the secrets of the composition sufficiently to make the answer to the question positive enough to support the judgment of a court.

An inventor takes certain starting materials, and subjects them to a process he has devised. The result is a product. If he sufficiently describes the starting materials and the process in his patent, he may claim the product, being new; but, if he simply defines what he claims as the 'product of his process,' he might find it an extremely difficult matter to prove infringement. * * * Now, there are many tests that may be applied to two bodies which are being compared in order to determine whether they are or are not identical. The number of these tests may be multiplied indefinitely, for the skill, the experience, the scientific ingenuity of the chemist, will ever devise new ones in the future, as they have the old ones in the past. Some of these tests will be of great significance; some, almost crucial; others will be of but minor importance. Their relative value, no doubt, may change as science goes sweeping on from point to point; *but it must be sound law, as it is reasonable common sense, to hold*

that the tests of prime importance in a suit for infringement are those which the patent itself prescribes. The inventor certainly may be assumed to know what it is that he has invented. If anyone is able to describe the product of his inventive skill, it is himself. He surely knows the earmarks of the thing he seeks to patent, and when, out of the multitudinous qualities which his product may exhibit under varying conditions and in different relations, he has selected and set forth in his patent a chosen few, surely these should be accepted as the distinguishing earmarks,—the characteristic stigmata of the product his patent is to cover." (Emphasis ours.)

In *American, etc., Co.* vs. *Mesta, etc., Co.* (C. C. A., 3rd), 18 Fed. (2d), 538, the Court of Appeals affirmed the ruling of the lower court that the defendant did not infringe. The patent in suit claimed a new chemical composition—a very hard substance known as "Adamite." The Court, commenting on the question of infringement, said (p. 539):

> "The trouble is to discover when a product is Adamite. This is a difficulty inherent in the product and in its source, and it was so recognized by the patentees. We think the only way a court can discover Adamite is by following the way the patentees themselves described it. Matheson vs. Campbell, 78 Fed., 910, 917, 918 (C. C. A., 2d)."

The plaintiff took the position that although there were a number of characteristics stated in the patent whereby the product might be identified, some of them were dominant and others unessential, and that the defendant's product had all the dominant characteristics. The Court said (p. 539):

> "When, as here, an important group of identifying characteristics, imposed upon the product by the patent, is absent, one asserting the patent cannot limit himself to what he claims to be, and what, in truth, may be, the dominant characteristics of the invention and prevail on proof of them alone. Some one else, conceivably, might invent a product with these characteristics and no others, and differentiate his invention from that of the patentee by that very difference."

It will be noted that in this case, as in the case of *Matheson* vs. *Campbell*, which is cited as authority, infringement was determined by applying the tests which were found not in the claims but in the body of the specification.

As we have said (ante, pp. 5-6), it is because of the general rule that claims which literally cover mere function, principle or result are invalid, that the Courts, in liberal interpretation of the patent statutes, will interpret the words of the claims to cover the real invention if that can be definitely and unmistakably ascertained from the specification. We have quoted the expression to that effect in the *Corn Planter Patent* case (ante, p. 6).

In *Seymour* vs. *Osborne*, 11 Wall., 516, at page 547, this Court said:

> "Where the claim immediately follows the description of the invention it may be construed in connection with the explanation contained in the specifications, and where it contains words referring back to the specifications it cannot properly be construed in any other way."

In *Mitchell* vs. *Tilghman*, 19 Wall., 287, at page 391, the Court said:

> "Usually the claim contains the words as described or substantially as described, or words of like import, which are everywhere understood as referring back to the descriptive part of the specification. Words of such import if not expressed in the claim must be implied, else the patent in many cases would be invalid as covering a mere function, principle or result, which is obviously forbidden by the patent law, as it would close the door to all subsequent improvements."

See also *Fuller* vs. *Yentzer*, 94 U. S., 288, and *Westinghouse* vs. *Boyden*, 170 U. S., 537, at pages 557-558.

But it is elementary that the principle will not be carried so far as to exclude what is in the specification or to interpolate anything it does not contain.*

So, in the case at bar, error can be avoided only by measuring the quality of the glue-base with the measuring sticks that the patentee discloses in the specification—the 9 to 1 boil-up test and the 170° hot water test of the patent.

(4) As we pointed out in our main brief (D. B., 70-78), we believe the error of the Court of Appeals as to the vital issue in the case was in large part due to a misinterpretation of the remark, introduced into the patent by amendment after the inventor died, that the product of the patent might be produced from "certain grades of untreated cassava carbohydrates," coupled with the Court's failure to recognize that the untreated cassava starch involved in the *Solva case* was a natural starch having the reduced water-absorptiveness measured by the tests of the patent. We believe that with all con-

---

*Rubber Co. vs. Goodyear, 9 Wall., 788 at page 795; Merrill vs. Yeomans, 94 U. S., 568 at page 583, and Motion Picture, etc., Co. vs. Universal, etc., Co., 243 U. S., 502, at page 510.

fusion as to chemical processing laid aside, and having in mind the sole question whether the glue of the patent is or is not a compound dependent for its properties for *quality* of base and *quantity* of solution, this Court will plainly see that the Court of Appeals was not justified in so interpreting these added words.

a. Examination of the patent specification in that light will show that the chosen quality of glue-base is one of the essential ingredients of the glue of the patent; although the particular chemical process of producing it is not important. The statement introduced into the patent specification by amendment that "certain grades" of untreated cassava may be used as the glue base will be seen to mean those grades of cassava which have a water-absorptiveness lying within the defined range.

b. The effect of the disclaimer will then be seen to be a limitation of the patent to the selection of such a glue-base; although not to any particular chemical process of producing such a base. The statement in the patent that "certain grades" of untreated cassava may be used will be seen to be consistent with the disclaimer when that expression is understood to mean those grades of untreated cassava which have water-absorptiveness within the defined range —the meaning plaintiff put upon it at the time of its introduction into the specification and at the time of the disclaimer.

It is true that in their brief, plaintiff's counsel persist in the assertion (see, for example, pp. 49, 50, 54, 74, 160) that in the *Solva* litigation most of the defendant's product was raw starch and that there was no evidence that it came within the tests of the patent. But that is not true. As we pointed out in our main brief (D. B., 71),

the raw starch there involved was, according to plaintiff's own statement, a "particular and peculiar cassava dry glue-base * * * which * * * behaved just like the processed goods when tested (Qs365-370, p. 646). Defendants tested it out first in the same way they did the processed goods (Qs373, 374, p. 646) and it tested the same (XQ467, p. 658)." And (D. B., 73), in the words of plaintiff's own counsel, this particular raw starch was "a starch * * * found in commerce already modified so that its viscosity is two or three times that of water by the Perkins test."

Furthermore, when in the *Solva case* plaintiff was confronted by the prior use at Poplar Bluff, it distinguished therefrom by pointing out that the raw starches there used were not degenerated to the extent specified in the patent, **and in so doing it applied to those starches the 9 to 1 boil-up test.** Thus in their brief in that case plaintiff's counsel said, referring to the various starches used at Poplar Bluff:

> "Lot 62. This was Florida grown cassava, treated January and February, 1905, with 8 quarts formaldehyde and 4 quarts caustic soda. These small amounts are not enough to produce any material amount of conversion (p. 425, fol. 1200). *It was raw material.* The viscosity was 40 at 16 to 1. *At 9 to 1 it would have been very much greater and more viscous. This was not converted and would not be usable as a panel or veneer glue.*"

> "Lot 67. This was Florida grown cassava treated in February, 1905, with a small amount of formaldehyde and caustic soda, but not enough to produce any material amount of conversion. *It was practically raw cassava.* The viscosity was 69 at 16 to 1. *It would have been much higher and more viscous at*

9 to 1. *This was obviously nothing but raw cassava and therefore not suited for a panel or veneer glue.*"

"Lot 69. This was raw cassava treated in March, 1905, with a little formaldehyde and caustic as a preservative without producing any material amount of conversion. *It was raw starch and was not degenerated to be usable for regular panel or veneer glueing.*"

"Lot 74. This was Florida grown cassava, treated in March, 1905, with a little formaldehyde and caustic but without materially converting it. It had a viscosity of 103 at 16 to 1, *showing it was raw cassava and not degenerated to make wood or panel glue.*"

"Lot 80. This was raw G. T. A. cassava and not suitable for veneer glue." (Italics ours.)

Also in their brief in the *Solva case* plaintiffs said under the heading of "Infringement" with reference to the base made by the Solva Company:

"and the degeneration was carried to and stopped at the critical point specified by Perkins."

Plaintiffs also said in that brief (p. 11):

"And Perkins' original specification told just how far to carry the degeneration or preliminary treatment of the starch to get this result. Besides stating that degeneration to soluble starch and dextrine should be avoided, it pointed out the exact stopping point or the degeneration by stating that it should be carried to the

> 'point where the base if mixed with from 2 to 3 parts of water and subjected to heat of 170° F. would result in a syrupy condition instead of a thick jellylike mass,'

and where the base, when dissolved according to the second step would parallel

> 'the animal glue solutions now employed industrially in respect of water contents as well as strength'

and still be

> 'amply fluid for easy application.'

The original specification, therefore, clearly described the same invention which is described and claimed in the Reissue patent. The amendments were merely further or additional descriptive matter of the same invention, and, therefore, quite proper and commendable, as the Court below held."

Notwithstanding the fact that in the *Solva case* plaintiff used the 9 to 1 boil-up test on untreated starches of the prior art to differentiate the glue made from those starches from the glue of the patent, yet plaintiff's counsel do not hesitate to say, on the basis of Dr. Grosvenor's testimony, that the 9 to 1 boil-up test is applicable only to starches that have been chemically degenerated by the acid process (P. B, 27). It is impossible to reconcile that statement with plaintiffs' position in the *Solva case*. Furthermore, the evidence shows that the Perkins Company still uses this 9 to 1 test on their own starches (Grosvenor, R., 77), notwithstanding the fact that the starches now used as glue-base by the Perkins Com-

pany are degenerated by the alkali process of patent No. 1,020,656 and not by the acid process of the patent in suit (Grosvenor, R., 132).

Here we have a good illustration of the character of Dr. Grosvenor's testimony and the expedients he resorted to to escape the plain limitations of the patent.

(5) So likewise in their brief plaintiff's counsel say repeatedly that defendant's glue is the same product as the Perkins glue (P. B., 3, 25, 91, 97 and 139). But counsel nowhere cite testimony in support of this assertion and the sense in which it is made is disclosed by their last reference to the subject (139) where they define defendant's glue as "an end product, the same *good as animal glue* which Perkins obtained by his preferred process." (Emphasis ours.)

Plaintiff's testimony on the subject of identity of defendant's glue and the Perkins glue rests on this same definition of the glue of the patent. It is based on the assumption that starch glue is the same as the Perkins glue if it is usable in wood veneering. Thus Dr. Grosvenor said (R., 35) that defendant's glue had the fluidity "of the glue of the Perkins patent" and (R., 38) in answer to a leading question he said that defendant's final glue was the same "industrial technical product as the final glue of the patent in suit." But on cross examination (R., 44) he was asked a question, assuming "that there is some glue-base of the Perkins patent, meaning that will cover the various glue-bases of that patent? And that that base has to have some sort of a degree of degeneration. What I want to find out from you is, is there any starch available that is less degenerated than that, and if so, where is it so you can go find it?" and in reply he said (R., 45) that he did not care to put any limit upon the glue-base of the patent; that he had found certain rare samples of starch that were outside "the preferred limits given in the patent in suit," meaning the tests of the patent, and added:

> "I have not attempted to determine in my own mind how far those limits would be extended by *what I have always regarded as the critical test given in the patents in suit, the test whether when made up with between 2 and 3 parts of water the base would make a glue having the properties of Perkins' glue.* That distinction between that and the 170° boil-up test—170° hot water test—has never been necessary because the bases I have met have all fallen within that 170° test." (Emphasis ours.)

Now, it was Dr. Grosvenor's testimony (R., 35) that the Kane base here involved fell within the 170° hot water test, although it did not fall within the 9 to 1 boil-up test (which Dr. Grosvenor pretended was applicable only to acid treated starches) and he said (R., 36):

> "The base examined as such before mixture was as I said a high viscosity base, it was verging toward the upper limits of the preferred description of the Perkins patent in suit."

But it was subsequently proved before the Master that the Kane base here involved did not respond to the 170° hot water test, and the Master so held (D. B., 52). Under those circumstances this Court cannot rely upon the indefinite testimony of Dr. Grosvenor, colored by a mental reservation which begs the very question at issue, as sufficient basis for a finding of infringement as to which the burden of proof is on the plaintiff.

Furthermore, defendant affirmatively proved by its practical engineer, Mr. Grossman, that the Kane base makes a much heavier glue than the Perkins base, requiring special machinery to handle it (R., 51-52 and 59-60), and he made the categorical statement that defendant's glue in the spreading machine is heavier than the Perkins glue (R., 60), and (R., 61):

"As to the Kane Company's finished cooked up glue as compared in viscosity with the finished glue of Perkins, it is heavier for the same amount of water added."

Furthermore, it was proved, as shown by the testimony cited by plaintiff under the heading, "Defendant's Base is Degenerated" (P. B., 94), that defendant's Kane base has a viscosity of 100 compared with the viscosity of 60 3/5 of Perkins' commercial base by one method of testing, and that defendant's base has a viscosity of 132 compared with Perkins' viscosity of 102 by another method of testing. And, of course, the viscosity of the final glue product depends upon the viscosity of the glue-base, although the finished glue has not the same absolute viscosity as the glue base mixed with nine parts of water and heated by steam at 100 lbs. pressure.

Still further, Dr. Grosvenor actually tested the viscosity of defendant's finished glue as compared with the viscosity of the Perkins glue (using, of course, a different method of testing viscosity) and found that where the finished Perkins glue showed a viscosity by that test of 125,000 to 126,000, defendant's finished glue showed a viscosity of 156,000 (R., 73).

(6) We have tried to cover, and to eliminate, the misleading effect of plaintiff's brief due to repeated assertions with respect to issues which are not the real issues of the case, and we have pointed out how on the question of the identity of plaintiff's starch and defendant's starch the assertions of plaintiff's brief are disingenuous and beg the real question. It is impossible, and perhaps unsuitable, to follow through plaintiff's brief page by page and correct individually the often repeated statements based upon the unsound premises hereinabove referred to. But there are certain further inconsistencies that we feel that it is necessary to discuss.

(a) Thus, on page 2 of the brief, plaintiff's counsel says "*there is not a statement by anybody to the effect that anybody ever satisfactorily glued together two pieces of wood with a starch glue until Mr. Perkins did it.*" The statement is brought into the discussion as though counsel were contending that *the glue of the patent* is the first starch glue that ever satisfactorily glued together two pieces of wood. But counsel does not really mean to say that. Behind the words "until Mr. Perkins did it" stands the fact that at Poplar Bluff more than two years prior to the application for the patent in suit, Mr. Perkins "satisfactorily glued together * * * pieces of wood with a starch glue" to make barrel heads (see P. B., 60, where counsel say of the Poplar Bluff use, "so far as the evidence showed, it was the only instance where a starch adhesive had been used for gluing together bodies of wood"). That being so, it does not make any difference whether any of the other prior starch glues described in public prints as wood glues were actually used in wood veneering or not. Plaintiff cannot now broadly claim a starch glue for wood work. It must claim, and it did claim, a specific starch glue. Defendant does not use that specific glue.

(b) We have pointed out above (*ante*, p. 6) in connection with plaintiffs' proposition (a) that the position they now take is a complete reversal of the position they took in the *Solva case* and in the *Hood-Wright* and *West Michigan cases*. Although this proposition is irrelevant if defendant is right in saying that the glue patented is, when the patent is rightly construed, a combination involving as one of its two essential elements a glue-base of reduced water-absorptiveness within the range defined by the tests of the patent; and although this proposition (a) was rejected by the Court of Appeals of the Sixth Circuit; yet we think that this Court's

attention should be directed to the following incident that occurred during the trial of the *Hood-Wright* and *West Michigan cases* before Judge Sessions in 1920.

During the trial of those cases claim 13, one of the second-step claims modified by the disclaimer, was under discussion. Judge Sessions asked the witness (Dr. Grosvenor) to tell him what portion, according to the witness' idea, of claim 13 was covered by the disclaimer. Mr. Crosby interrupted, saying that he thought that a matter of law rather than a question for the expert, and thereupon the following colloquy occurred between the Court and Mr. Crosby and Mr. William H. Kenyon, who was then associated with Mr. Crosby:

"Mr. Crosby: That he except from that claim,—that he does not intend to cover in that claim any process excepting where the base used in the process is one degenerated to that point; whereas the claim, without the disclaimer, might be implied to include some other base.

The Court: What for example?

Mr. Crosby: One not degenerated to the proper point.

The Court: To what point?

Mr. Crosby: Entire raw starch, **which would not produce Perkins' glue** but some entirely different product.

Mr. Kenyon: The Circuit Court of Appeals in Chicago said that our second step, per se, was not an invention, new with us; that is, simply treating starch, any kind of starch, with water and this caustic; that it was only ours when it **started with a suitably degenerated carbohydrate, then these steps of water and caustic produced our glue; but if those steps, those identical steps of water and caustic and those identical amounts had been applied to abso-**

lutely raw starch, we would not have produced our glue. The Circuit Court of Appeals said, therefore, you can't have the claim as broad as that. We said to Judge Sanborn that word 'suitable' enables you to construe that claim down to the real limits of our invention, namely, the application of that second step, water and caustic, in those quantities, to a carbohydrate suitably degenerated. Judge Sanborn said 'no.' I think the Circuit Court of Appeals meant that that was the claim for the second step, per se, irrespective of what you started with, therefore, it is broader than your invention, because it covered, for instance, the application of these two steps to absolutely raw starch, which would not give us our glue. It also might cover the use of soluble starch or dextrine which would produce a watery size or mucilage. Therefore, we disclaimed from that claim the treating by three parts or less of water and this caustic any kind of starch except a starch that has been degenerated to the point that we have described. Now the claim, as limited by the disclaimer, is for the subject matter that is left, namely, for starting with the so degenerated starch, and with that as the subject matter of the treatment applying the three parts or less of water and the caustic and getting the result that is specified. That is our invention. The claim, with the disclaimer, is clearly in terms limited to that. Without the disclaimer it might have been as broad as Judge Sanborn seems to have considered it, and, therefore, broader than our invention. So the thing disclaimed to put it crudely, would be the mixing of raw starch, that is the wholly undegenerated starch, for example, with three parts or less of water, and six to ten per cent. of caustic, and trying to see what you would get. You would not get our glue under those

circumstances; you would not have our invention under those circumstances. We do not want to cover that; the defendant may do that. Therefore, we disclaimed that, but what is left is the starting with a starch that is **degenerated to the point that our patent describes as the subject matter of the patent, the mixing of that starch and nothing else with three parts or less of water and with the caustic, and getting as a result of that combination the good as animal glue that Perkins first gave to the world,** and that the defendant is enjoying the benefit of." (Emphasis ours.)

The "second-step" claim 13 there under discussion was referred to by Mr. Crosby as a "process" claim. The second-step claims have been so referred to throughout this litigation although they involved no processing of the starch, but merely a selection of ingredients. And it is interesting to note how completely Mr. Kenyon identified this so-called "process" of the second-step claims as amended by disclaimer with the glue product of the patent; how he said that you would not have the Perkins invention or get the Perkins glue product unless you started with a starch that was neither over-degenerated nor under-degenerated, and how he said that the patent describes as its subject-matter the mixture of that quality of starch and nothing else with 3 parts or less of water to get "the good as animal glue that Perkins first gave to the world."

Now plaintiff wants to repudiate all that and say that you can get "the good as animal glue" of the patent by starting with any starch provided only that it is not degenerated to soluble starch or dextrine. It now wants to cover that; it does not want defendant to do that, and denies that it disclaimed that.

(7) Discussing the prior cases* in which the Perkins patent has been held to be limited to a glue containing a base consisting of starch degenerated to the extent described in the patent, plaintiff's counsel erroneously say (P. B., 6-7) that in these cases the courts "found no infringement by limiting the product claims" to "Perkins preferred two-step process" and "making them of the same scope as the narrow two-step process claims." It is here that plaintiff's irrelevant discussion of the two-step process claims with chemical degeneration in the first step is peculiarly misleading. To avoid being misled here, it is necessary to appreciate that throughout the litigation the word "process" has been used in two senses—(1) to define the actual treatment or processing of the glue-base as distinguished from the selection of it, and (2) to define the selection of the glue-base and of the necessary quantity of water in accordance with the second-step claims as amended by the disclaimer.

By the time the *Gould Mfg. Co.* and *Wisconsin Chair cases* were tried before Judge Geiger, all consideration of the preferred two-step process involving chemical degeneration had dropped out because the Kane base there, as here, had not been processed at all, and that plaintiff had finally conceded. It is true that Judge Geiger (280 Fed., 729) referred to the two-step process claims 19 and 20 which had been sustained by the Court of Appeals in the *Solva case,* as well as to the second-step claims 10, 12 and 13 which had been held invalid. Claims 19 and 20 involved an actual processing of the glue-base in the first step, as distinguished from a mere selection of a properly

*We have printed as an appendix to this brief the opinions of Judge Geiger in the Gould Mfg. Co. Case, the opinion of the Circuit Court of Appeals for the Seventh Circuit in the same case and the opinion of the Circuit Court of Appeals of the Second Circuit in the Standard Case.

degenerated starting material. Original second-step claims 10, 12 and 13 contained no limitation to a first step at all, either processing or selecting. But Judge Geiger did not fail to understand (p. 730) that the position plaintiff took at the end of the *Solva* litigation was that "the final glue product may be made by suitably creating a suitable base whether previously degenerated by the alkali treatment or by the acid treatment or obtained by intermixture or simply found in the market," and said (pp. 730-731):

> "Now the query at once arises, if the patent in suit, and particularly claims 28, 30 and 31, cover any good as animal glue made from starch, if processes cut no figure, if degeneration be of no consequence, except that it may be said that the final product contains starch, in some way, somehow, degenerated or converted, then why the necessity of holding any process claims invalid? If the claims here in suit are thus all-embracing, then why *disclaim from* any of the process claims? If, for example, the product of claim 28 may be made by the processes noted in claims 10, 12, or 13, then why disclaim from the latter 'any process of making glue excepting where the starch or starchy product is degenerated to the extent described * * * *whereby* the process results,' etc. Surely the disclaimer indicates that if glue, made according to the processes broadly described in claims 10, 12, and 13, resulting in making the product noted in claim 28, then Perkins will not claim it unless the starch *subjected to the process* is degenerated to the extent described.
>
> • • • • • • • •
>
> "Surely these disclaimers proceed upon the hypothesis that glue may be made, as in such disclaimed

claims directed, even if the starch is not degenerated *as specified in the patent;* and it will not do to argue that, merely because a glue so made turns out to be good as animal glue, therefore the *precise degeneration reserved* by the disclaimer *must be assumed* to have entered into the process *in the manner specified,* and therefore into the product. If the result in the Solva Case is not as Judge Sanborn states it; if, notwithstanding the language of the court, any starch glue, good as animal glue, is within the Perkins monopoly—then the entire patent, as Judge Sanborn considered and upheld it, is now *re*claimed, not only from the decree of the appellate court, but also from the plaintiff's express disclaimer. True, in considering two-step processes, it is entirely proper to assert that an alleged infringer equivalently followed one or the other step. But after the Circuit Court of Appeals expressly held that each step, per se, was old, that their combination exhibited the patentable novelty, it was no longer possible for Perkins to claim that *each step equivalently comprehended* the other. And when, therefore, the plaintiff in this case conceded, at the opening, that the defendant's base was not within the reservation of the disclaimer, it conceded—in connection with the clear proof in the case—that the defendants in making their glue were in the disclaimed field. It would be simply paradoxical to allow that, after exempting to the public the right thus to process (see, for example, claim 10), every resultant product was still within the protection of claim 28."*

*Plaintiff's counsel professes (P. B., 107) to be unable to find any sense in Judge Geiger's statement "If the claims here in suit are thus all-embracing, then why disclaim from any of

(*Footnote continued on next page.*)

Plaintiff's counsel continue the confusion (P. B., 109) when they say:

> "Defendant's base in the case before Judge Geiger may not have been within the reservation of the disclaimer—their process may have been different from Perkins' preferred two-step process, * * *"

but it was perfectly clear to Judge Geiger that defendant's *glue* was not within the reservation of the disclaimer, not because the base had not been degenerated by some chemical process, but because it had not been chosen from among starches having reduced water-absorptiveness within the described range.

Plaintiff's counsel go on to say (P. B., 109) that plaintiff did not exempt to the public by the disclaimer

> "the right to process as described in Claim 10 and obtain the good as animal veneering glue from starch, but only the right process as described in Claim 10 *when the resultant product was something different*, as for example, a size or paste or the like." (Emphasis theirs.)

But the trouble with this argument is that it does not follow the disclaimer. The disclaimer did not ex-

---

the process claims?" It seems to us that the sense of this is clear enough. He was referring to the so-called second-step process claims 10, 12 and 13 which he had quoted and which had been held invalid and which had been disclaimed from. These claims specify the production of a glue as good as animal glue made from starch of any degree of degeneration, and his query was, why it was necessary to disclaim anything from these claims if the patent in suit could legitimately "cover any good as animal glue made from starch," and he went on to explain very clearly what he meant in the sentences immediately following.

empt the making of glue from starch with 3 parts of water except only when the resultant product is something different, as for example, a size or paste or the like. The disclaimer exempted to the public "the process of making a wood glue" from a starchy product, with a solvent of cellulose and about 3 parts or less by weight of water to produce a glue having adhesive powers "substantially as great as those of good animal glue" (original claim 13) "excepting where the starch or starchy product or carbohydrate subjected to the process is degenerated to the extent described in said reissued letters patent."

This decision of Judge Geiger's was affirmed by the Court of Appeals of the Seventh Circuit (292 Fed., 596, see appendix) and there also the word "process" was used to define the selection of the glue-base rather than any particular process of chemical degeneration of the glue-base. That is, the Court did as Judge Geiger did and as plaintiff's counsel did when in the statement quoted by Judge Geiger (280 Fed., 730), they defined the selection of the proper glue-base as "suitably *creating* a suitable base, whether previously degenerated by the acid treatment, or obtained by intermixture, or simply found in the market—provided only that the base is in the proper state or condition of degeneration when treated to make this final glue product." The discussion in this litigation had at that time long passed the stage where there was any contention that the so-called "process" of the first step excluded the "creation," as plaintiff's counsel put it, of a glue-base by the selection of a starch having the necessary reduced water-absorptiveness.

(8) Plaintiff's counsel, in their discussion of the disclaimer, insist that the disclaimer from the second step claims cannot have any effect upon the product claims because in general product and process are inde-

pendent inventions. We have covered this contention in our main brief (D. B., 41-46 and 58-60), where we point out that here the disclaimed second step claims, like the product claims rest wholly on selection of ingredients, so that to disclaim *the making* of glue by applying three parts of water and alkali to any starch except only a starch degenerated to the extent described in the patent cannot be differentiated from disclaiming *glue made* with three parts of water and alkali and any starch glue-base except only a starch degenerated to the extent described in the patent.

The case mainly relied upon by plaintiff's counsel in this connection and discussed by them at pages 9, 110 and 145, is *Rubber Co.* vs. *Goodyear*, 76 U. S., 788. Plaintiff's contention finds no support in that case. In fact, the invalidity of the second step claims as they originally stood might properly have been arrived at by the Court of Appeals in the *Solva* case in strict accordance with the rule of the *Goodyear* case, and the validity of the product claims might properly, we think, have been arrived at by the application of the rule of the *Goodyear* case in connection with the application of the rule in *Hobbs* vs. *Beach, etc., ante* (p. 5). In the *Goodyear* case (p. 794) "the court below held the objection to the patent for the process—that it is too broad—fatal to its validity, because the claim embraced 'other vulcanizable gums' besides India rubber as articles to which the process was to be applied"—just as in the *Solva* case the Court of Appeals held the second step claims invalid because they embraced the application of the second step to starch other than starch degenerated to the extent specified in the patent. In the *Goodyear* case the product claim was of *narrower* scope, specifying the special ingredient India rubber, and the Court held that its patentability was not affected by the invalidity of the *broader* process claim not so limited. So in the *Solva* case the Court interpreted those words of the product

claims which identified the starch as limited to a starch of the particular kind described and held the product claims so limited patentable notwithstanding the invalidity of the broad second step claims. The rule of the *Goodyear* case that the invalidity of the *too broad* process claims does not affect the validity of a *properly restricted* product claim affords no basis for saying here that when plaintiff disclaimed the making of glue from starch with three parts of water, except only when the starch was degenerated to the extent described, it could still assert that the patent covers glue so made.

The cases upon which we rely (D. B., 58) fully sustain the proposition we advance—that where the character of the final product hinges on the selection of materials rather than on the mode of treatment, claims defining the selection cannot logically be differentiated from claims defining the product resulting from the selection. Plaintiff's discussion of those cases (P. B., 167-168) does not touch the point.

The correctness of the rule upon which we here insist was in fact recognized by Judge Sanborn in his memorandum for final decree in the *Solva* case, where he said (R., 359-360):

> "The first step designed to produce the glue-base is therefore old and necessarily unpatentable, hence the base itself must be equally impossible of patent protection"

and that statement is quoted with apparent approval in plaintiff's brief here (P. B., 84).

(9) Plaintiff's counsel printed in their brief an opinion furnished to them by former Judge E. Henry Lacombe some time before his death (P. B., 175-176). This opinion shows the confusion as to process and product above discussed. It assumes that the opinions of the 2nd C. C. A. and the 7th C. C. A. are in conflict with the rule of the *Goodyear case* that process and product

are, in general, separate and independent inventions. We trust that we have made it plain here, as we might have made it plain to Judge Lacombe, if we had been asked to do so, that the rule of the *Goodyear case* is not involved in those decisions.

Respectfully submitted,

CHARLES E. HUGHES,
WILLIAM H. DAVIS,
JAMES A. WATSON,
R. MORTON ADAMS.

March 10, 1928.

PERKINS GLUE COMPANY vs. GOULD MANUFACTURING COMPANY, et al.

SAME vs. THE WISCONSIN CHAIR COMPANY, et al.

United States District Court, Eastern District of Wisconsin, May 3, 1922.

280 Fed., 728.

GEIGER, D. J.:

These two cases rest upon the re-issue patent to Perkins which was the subject of consideration in Perkins Glue Company vs. Solva Waterproof Co., reported 223 Fed. Rep., 792 (D. C., N. D., Ill.); and Id. (C. C. A., 7th Cir.), 251 Fed., 64, Claims Nos. 28, 30, and 31 are in issue:

> "28. A glue comprising cassava carbohydrate rendered semi-fluid by digestion and having substantially the properties of animal glue."
>
> "30. A wood and fiber glue formed of a starchy carbohydrate or its equivalent by union therewith of about three parts or less by weight of water and alkali metal hydroxid."
>
> "31. A wood and fiber glue containing amylaceous material as a base dissolved without acid in about three parts of water or less, and being viscous, semi-fluid and unjellified."

It will be assumed that nominally at least, the above three claims were comprehended within the decree in the Solva case as valid, and therein held infringed. But the present case, in view of the determination by the Circuit

Court of Appeals, presents sharply the question, whether, in the light of the determination by said court upon other claims of the patent, these three claims can be or were intended to be held valid without any limitation whatsoever. The plaintiff contends that such claims were recognized as broadly valid, covering a new product and, therefore, the product,—i. e., "a glue comprising cassava carbohydrate rendered semi-fluid by digestion and having substantially the properties of animal glue"—cannot be made by any process without leave or license of the plaintiff. The defendant contends that the determination by the Court of Appeals limited the validity of the three claims in question to a product made according to processes held valid by the Circuit Court of Appeals, but do not cover a product made according to other processes and particularly processes, claims for which were held invalid in the identical case determined by the Circuit Court of Appeals; or claims which plaintiff "disclaimed" as hereinafter noted.

In the Solva case process claims were held valid, among them:

> "19. In the process of making good glue, the combination of the following steps, agitating a cassava carbohydrate with a digestive agent to decrease its water-absorptive properties without rendering the carbohydrate materially soluble in cold water and then putting the product thus produced into a solution containing about three parts or less by weight of water to produce a glue for application."
>
> "20. The process of making glue, which consists in agitating a starchy carbohydrate with water and a digesting agent to reduce the water-absorptive properties of the carbohydrate without rendering it materially soluble in water, then mixing the carbohydrate with water and caustic alkali, the amount of

water used being about three parts or less by weight of dry carbohydrate, the amount of caustic used being about ten per cent. or less by weight of dry carbohydrate to form the glue as distinguished from mucilages, sizes and paste."

See also other two-step claims in patent.

Claims 10, 12 and 13 of the patent are pertinent to the questions now presented:

"10. The process of making glue which consists in dissolving cassava carbohydrate in caustic alkali until a glue is formed as distinguished from mucilages, sizes and pastes."

"12. The process of making a glue, which consists in mixing starch with water and caustic alkali to dissolve the carbohydrate, the amount of water used being about three parts or less by weight of dry carbohydrate so that a wood glue is formed as distinguished from mucilages, sizes and paste."

"13. The process of making a wood glue which consists in treating a suitable starchy product a material portion of which is substantially insoluble in water with a solvent of cellulose and about three parts or less by weight of water, to produce a glue having adhesive powers substantially as great as those of good animal glue."

The Circuit Court of Appeals dealt thus with the decree of the District Court:

"The decree of the District Court sustaining the claims for a glue base process and product and for the so-called 'second step' as such is reversed, and that part of it which upholds the claims of the patent

for the final process and the resultant product respectively is affirmed * * *"

When the case was remitted to the District Court for entry of a decree upon this mandate, the parties appeared to be at variance respecting the effect of the appellate ruling, and Judge Sanborn expressed himself in a memorandum:

"The opinion of the Circuit Court of Appeals is said by counsel for all parties to be perfectly clear, but they differ radically as to its meaning and submit totally different forms of decrees. The opinion of Judge Kohlsaat requires very careful study, as well as the patents, and even then the opinion is obscure and other appeal may be necessary to fully determine its meaning. To the best of my ability I will endeavor to state that meaning as I understand it.

"The first process or step of the patent is for the purpose of creating a suitable starch paste and then applying to that base the second step in order to produce the final product or starch glue. These are the only steps or processes described and they may be taken singly or together. Both are old and unpatentable when taken separately. But when joined together to produce starch glue which has the properties described by Mr. Perkins and which is as good or better than animal glue, they are new and make patentable subject matter both as a process and as producing a patentable product consisting of glue. * * *

"From these quotations it seems probable that the appellate court intended to sustain only those claims of the patent which included only the two steps and only when their use results in the Perkins glue together with such additional claims which count on

such glue as a product of the two steps and no others."

"The result of the foregoing is that the argument of counsel for defendants is adopted so far as construction of the decree is concerned, and that of plaintiff's counsel rejected."

This opinion was filed and the decree pursuant to the mandate entered on August 5, 1918.

On February 6, 1919, the plaintiff herein, as assignee of the patentee, filed a disclaimer—undoubtedly obediently to its conception of the ruling of the appellate court and Judge Sanborn's intepretation thereof, as above noted,—which disclaimer is abstracted thus:

"Enters its disclaimer of claims 1, 3, 4, 6, 7, 8, 16, 24, 25, 26 and 27 thereof (to wit, the claims for the glue base, per se, and for the process of making the glue base, per se). And, further, it hereby disclaims from claims 9, 10, 11, 12, 13, 14 and 38 of said re-issued Letters Patent numbered 13,436, any process of making glue, excepting where the starch or starchy product or carbohydrate subjected to the process is degenerated to the extent described in said re-issued letters patent number 13,436, whereby the process results in the good-as-animal glue described in said re-issued Letters Patent. * * *"

The plaintiff, upon the motion for rehearing in the appellate court, observed:

"As the opinion plainly indicates, the final glue product may be made by suitably creating a suitable base, whether previously degenerated by the alkali treatment, or by the acid treatment, or obtained by intermixture, or simply found in the market—pro-

vided only that the base is in the proper state or condition of degeneration when treated to make this final glue product."

Now the query at once arises, if the patent in suit and particularly claims 28, 30 and 31, cover any good-as-animal glue made from starch, if processes cut no figure, if degeneration be of no consequence except that it may be said that the final product contains starch, in some way, somehow, degenerated or converted, then why the necessity of holding any process claims invalid? If the claims here in suit are thus all-embracing, then why *disclaim from* any of the process claims? If, for example, the product of claim 28 may be made by the processes noted in claims 10, 12, or 13, then why disclaim from the latter "any process of making glue excepting where the starch or starchy product is degenerated to the extent described * * * *whereby* the process results," etc. Surely the disclaimer indicates that if glue, made according to the processes broadly described in claims 10, 12 and 13, resulting in making the product noted in claim 28, then Perkins will not claim it unless the starch *subjected to the process* is degenerated to the extent described. And if, as must be conceded, all starches, whether used in glue, sizes or pastes, undergo degeneration or conversion, and if, as claimed on rehearing, the degeneration may take place or may be obtained by "intermixture" with other ingredients, then again, why the necessity of claims 10, 12 or 13, why the necessity of the more specific two-step claims, and why the necessity of any disclaimer out of claims 10, 12 and 13?

Surely these disclaimers proceed upon the hypothesis that glue may be made, as in such disclaimed claims directed, even if the starch is not degenerated *as specified in the patent;* and it will not do to argue that merely because a glue so made turns out to be good-as-animal

glue, therefore the *precise degeneration reserved* by the disclaimer *must be assumed* to have entered into the process *in the manner specified,* and therefore into the product. If the result in the Solva Case is not as Judge Sanborn states it; if, notwithstanding the language of the Court, any starch glue, good-as-animal glue, is within the Perkins monopoly,—then the entire patent, as Judge Sanborn considered and upheld it, is now reclaimed, not only from the decree of the appellate court but also from the plaintiff's express disclaimer. True, in considering two-step processes, it is entirely proper to assert that an alleged infringer equivalently followed one or the other step. But after the Circuit Court of Appeals expressly held that each step, per se, was old, that their combination exhibited the patentable novelty, it was no longer possible for Perkins to claim that *each step equivalently comprehended* the other. And when, therefore, the plaintiff in this case conceded, at the opening, that the defendant's base was not within the reservation of the disclaimer, it conceded —in connection with the clear proof in the case—that the defendants in making their glue were in the disclaimed field. It would be simply paradoxical to allow that after exempting to the public the right thus to process (see for example claim 10) every resultant product was still within the protection of claim 28.

It is my judgment that the result in the appellate court, when considered with the subsequent disclaimer, gives to patents such as Gerard (Belgian patent No. 34,869) and Dornemann (French, No. 232,781), a significance which was necessarily denied them when Judge Sanborn in the Solva Case accorded broad validity to practically the whole of the Perkins patent. The proofs in the case respecting practice of the processes of each of those two patents seem to me a perfect demonstration that the plaintiffs' disclaimer of claims 10, 12 and 13

was in effect a disclaimer of Gerard and Dornemann, and it would be absurd upon the proofs now here to say that the processes and product practiced and produced by defendants' witnesses were permissible if the product be called "sizing" or "paste," but not permissible, if upon practice of the process—the disclaimed process—good veneering glue resulted.

Plaintiff's witness, Grosvenor, admitted, though somewhat reluctantly, that, though his experimental use of Gerard or Dornemann gave an unsatisfactory product, he would not deny that, had he practiced such processes by using defendant's base, he would have had defendant's glue as a resultant. On the other hand, the defendants' witnesses leave no doubt upon the matter, unless such doubt is arbitrarily injected by *assuming* that every base is, or sooner or later will be, degenerated *as specified* by Perkins. But, as noted, this assumption should have resulted unhesitatingly in an affirmance of the decree in the Solva Case and a validating of the Perkins patent in its entirety, and, of course, dispense with the necessity of any disclaimer.

It is my judgment that, upon the issue as defendants clearly tender it, the Perkins patent—in view of the result in the Solva Case and the plaintiff's disclaimer—must now be regarded as embodying processes and product clearly apprehendable by workers in the art, and apparently the Circuit Court of Appeals aimed to point out an invention thus apprehendable. Else it would not have been necessary to observe that "there seems to have been great difficulty in getting at the correct *formula;* that Perkins labored years to get the latter *just right*"; that, quoting from the witness Carmichael, "he [Perkins] proportioned the *various steps* to one another according to the selection of raw material, in the conversion of the raw material, and in the solution of the material, being particular about the various substeps by

which, in the main step effecting the solution, he obtained a uniform and homogeneous product."

Therefore, it is not possible, after crediting Perkins with discovering a correct formula, one that is "just right," to assume that every formula which he discarded, and that every product made by a discarded formula, is none the less within his monopoly, nor to extend the latter over products resultant upon the practice of Gerard or Dornemann, even though the latter failed or were not interested in apprehending the efficacy of their processes to produce a veneering glue satisfactory to others than to Perkins.

Further, Perkins' monopoly cannot be left within vague, undetermined or undeterminable boundaries by the mere suggestion that "by proper adjustment of conditions" raw starches "may be used without the first-step treatment." Such "proper adjustment" must in any event appear as clear legal equivalency, and, as noted, the proof of such equivalency is not adduced by mere statement that an alleged infringer is making good veneering glue out of starch, wherefore he must have availed himself of Perkins' discovery.

I am well satisfied to interpret the result in the Solva Case as did Judge Sanborn. Indeed, his estimate, when considered in the light of his exhaustive research at the original trial, is most persuasive; and upon such view the proofs in this case clearly absolve the defendants from any charge of infringement.

A decree dismissing the bills may be entered accordingly.

Perkins Glue Co. vs. Standard Furniture Co.

(Circuit Court of Appeals, Second Circuit, January 8, 1923.)

287 Fed., 109.

Hough, C. J.:

The history of litigation over this patent is so long and so fully reported that we shall for the most part express our opinion about the facts at bar by reference to other decisions. The patent is the Perkins reissue No. 13,436 (original No. 1,020,655, dated March 19, 1912; reissue dated July 2, 1912).

The validity and scope of the patent were elaborately considered by the appellate court in the Seventh Circuit in Solva, etc., Co. vs. Perkins, etc., Co., 251 Fed., 64, 163 C. C. A., 314, modifying (D. C.) 223 Fed., 792. Claims 13, 28, 30, 31, and 38, were there in issue and are also the subject of litigation here. The subject-matter of the patent is described by its title, viz., "glue and method of making the same," and the language of the claims is sufficiently set forth in the opinion of Cooper, J., below in the present litigation. Perkins, etc., Co. vs. Standard, etc., Co., 279 Fed., 458.

The patent has also been considered in one of the Michigan districts. Perkins, etc., Co. vs. Hood, 279 Fed., 454; Same vs. Holland, etc., Co., 279 Fed., 457. Since opinion was filed below the patent has been carefully gone over in Perkins, etc., Co. vs. Gould, etc., Co., 280 Fed., 728, by Geiger, J.

This record contains no evidence offered by plaintiff casting any new light on Perkins' disclosure; that is we find in plaintiff's present evidence material explaining what all the courts have said and what they have differed about, and nothing else. The owners of the pat-

ent cannot in our opinion complain of the result reached by the Circuit Court of Appeals in the Solva Case, supra, namely, that the process disclosed by Perkins consisted of two parts or steps, and that each of the steps considered by itself was old, but the product was new and patentable. Nor can plaintiff complain if, without expressing agreement or disagreement with this result, we accept it for purposes of present decision.

Sanborn, District Judge, upon receipt of the mandate in the Solva Case, ruled that only those claims remained valid after the decision of the higher court "which included the two steps (of the process) and only when their use results in Perkins' glue, together with such additional claims as count on such glue as a product of the two steps and no others." We are not advised that any appeal was ever taken from this interpretation of the ruling of the Circuit Court of Appeals. Subsequent to such ruling, however, this plaintiff disclaimed, inter alia, from claims 13 and 38 of the reissue, "any process of making glue excepting where the starch or starchy product of carbohydrate subjected to the process is degenerated to the extent described in" in the reissue. For this procedure, see 280 Fed., 729, 730.

The infringement here claimed is that defendant procures starch so degenerated somehow or anyhow (plaintiff cares not) as to be in a condition equivalent to starch treated by Perkins' first process, and then gives to that substance Perkins' second process, and so obtains Perkins' product. "Degeneration," as used throughout this evidence, means, according to plaintiff's expert witness, "a certain proportioning of resulting viscosity, cohesiveness, and adhesiveness." As matter of fact there is no denial of defendant's evidence that the starchy substance or carbohydrate (called viscamite), which it uses as the base for its alleged infringing glue, is a natural product; it has received no chemical treatment whatever. The

fact is that the earth has been found to produce a starch which plaintiff says is the exact equivalent of what Perkins made by his first process.

This product of nature cannot, per se, be covered by any patent, and it certainly is not the result of any process devised by Perkins. Therefore, if we accept the decision in the Solva Case as interpreted by Sanborn, J., and apparently acquiesced in by plaintiff, there can be no infringement, because this defendant is not using a glue which is the result of both steps of Perkins' patent.

But we go further, and examine with particularity the method or process used by defendant in making its glue. Fortunately what the defendant did was so plain that it is covered by a stipulation, inter partes, the substance of which is that, starting with the natural starch base, a mixture is made ultimately containing "about 2⅓ parts of water to one part of starch base by weight and about 3 per cent. of caustic soda based on the weight of the starch." Let it be assumed that this is the equivalent of Perkins' product, yet it remains true (1) that the process, per se, has been held old, and (2) that in our opinion it is substantially disclosed in the Dornemann French patent of December 11, 1893, and described with reasonable accuracy in Belgian patent to Gerard of June 19, 1874.

In our opinion this record shows that some accident of nature, or the skill of agriculturists, has produced and put on the market a cassava starch of that degree of viscosity, etc., which Perkins achieved by his degenerative process. With such a starch, defendant, by using methods as old as Gerard, has produced a substance which plaintiff says is Perkins' glue. Perhaps it is in result; but it cannot be the same thing in a patentable sense, because nature has supplied the base and Gerard the process. The only reason that ever justi-

fied any court in holding Perkins' product patentably new was by finding it the peculiar result of a combination of two processes severally old. No such foundation for a finding exists in this case.

We have not attempted to harmonize or explain all the previous decisions; it is enough to point out that, if the only appellate decision be accepted as finally interpreted, there is no infringement, and if the facts in this case alone be regarded, nature or the farmer has (so to speak) superseded the first half of Perkins' method, and, as the second half was not new, the product of a natural base treated by an old process cannot be an infringement under any view of the law.

Plaintiff has defined its product as a "new vegetable glue, as good as animal glue for veneering." We think that this definition is not advanced by embodying in it a laudatory phrase descriptive of intended result. We may agree that Perkins disclosed a "new vegetable glue"; i. e., a manufactured product. There are some manufactured products so broadly new that the same thing, however produced, may be within the invention's broad range of equivalents. This is a question of fact; but, on the prior art and the evidence herein as to modern cassava starch, Perkins' vegetable glue is not such a product.

We think, therefore, that the lower court fell into error in substantially paying no attention to the nature of defendant's starch base, and it is directed that the decree be reversed, and the cause remanded, with directions to dismiss the bill, with costs, in both courts, on the ground of noninfringement.

PERKINS GLUE CO. vs. GOULD MFG. CO., et al.

SAME vs. WISCONSIN CHAIR CO., et al.

(Circuit Court of Appeals, Seventh Circuit, June 18, 1923.)

292 Fed., 596.

BAKER, Circuit Judge:

In each of these cases appellant based its complaint upon claims 28, 30 and 31 of reissue patent No. 13,436, July 2, 1912, for improvements in glue and method of making the same. The bills were dismissed on the ground of non-infringement. See 280 Fed., 728.

The claims in suit read as follows:

> "28. A glue comprising cassava carbohydrate rendered semi-fluid by digestion and having substantially the properties of animal glue.
>
> 30. A wood and fiber glue formed of a starchy carbohydrate or its equivalent by union therewith of about three parts or less by weight of water and alkali metal hydroxid.
>
> 31. A wood and fiber glue containing amylaceous material as a base dissolved without acid in about three parts of water or less, and being viscous, semi-fluid, and unjellified."

In Solva Glue Co. vs. Perkins Glue Co., 251 Fed., 64, 163 C. C. A., 314, this Court considered the validity and scope of this same patent in view of the prior art. And in Perkins Glue Co. vs. Standard Furniture Co. (C. C. A.), 287 Fed., 109, the Circuit Court of Appeals for the

Second Circuit has recently given its estimate of this patent, in view of the prior art and prior decisions.

From the former decision in this court it appears that the patent contains five classes of claims; (1) the process of making from starch a base for glue; (2) the glue base as a product; (3) the process of converting the glue base into glue; (4) the combination of the two aforesaid processes; (5) claims for glue as a product. The first three groups were held to be invalid, the fourth and fifth were sustained, and the particular question now here for decision is whether the claims in group 5 are limited to a product that is the result of practicing the process of claims in group 4, or should extend to all glues made from starch bases irrespective of the method, provided only that they have the essential characteristics of the glue made by the process of the claims in group 4.

Though the decision in the Solva Case is not res adjudicata between the present litigants, we find no difficulty in following it on the principle of stare decisis. After reversing that part of the decree which sustained the claims for a glue base process and product and for the so-called second process as such, the mandate reads:

> "And that part of the decree which upholds the claims of the patent for the final process (that is, the combination of the processes numbered 1 and 3 above) and the resultant product respectively is affirmed."

It seems to us that the Court intended to limit the valid product claims to the product that resulted from practicing the valid process claims. Such was the interpretation put upon the opinion by Judge Sanborn when the case was returned to his court to execute the mandate, and the Perkins Glue Company failed to appeal from his consequent action; and the same valuation of the opinion

in the Solva Case was made by the Court of Appeals for the Second Circuit in the Standard Furniture Case.

Following the final decree of Judge Sanborn, appellant filed in the Patent Office a disclaimer of all the claims for the glue base and all the claims for the process of making the glue base; and appellant further disclaimed "from claims 9, 10, 11, 12, 13, 14 and 38," which cover the second process, "any process of making glue excepting where the starch or starchy product or carbohydrate subjected to the process is degenerated," by use of the first process, "to the extent described in the said patent." In our judgment this disclaimer is a conclusive bar to appellant's attempt to monopolize a product, which does not depend at all for its existence upon the use of appellant's valid process claims.

In addition to the foregoing reasons, we may say that our view of the prior art leads us to the conclusion that the only patentably novel thing that could be attributed to Perkins' labors was the combination of two processes which severally were old, and that no product claims could validly be given a broader sweep of monopoly than inheres in the combined processes.

The decrees are severally affirmed.

Office Supreme Court, U. S.
FILED
MAR 26 1928
CHARLES ELMORE CROPLEY
CLERK

IN THE

Supreme Court of the United States

OCTOBER TERM, 1927.

No. 285.

HOLLAND FURNITURE COMPANY,
Petitioner,

vs.

PERKINS GLUE COMPANY.

PETITIONER'S ANSWER TO RESPONDENT'S REPLY BRIEF.

CHARLES E. HUGHES,
WILLIAM H. DAVIS,
JAMES A. WATSON,
R. MORTON ADAMS.

March 23, 1928.

GALLO & ACKERMAN, Inc., 142 Liberty Street, 'Phone--Rector 7257-8.

SYNOPTICAL INDEX.

PAGE

Plaintiff's reply brief continues to becloud the issue by using the word "process" with a double meaning 2

"Process" and "product" as involved here are merely statements of a choice of ingredients 2

Defendant's position was the same in the court below 3

The same confusion of process and product pervades plaintiff's discussion of the tests of the patent..... 6

The tests of the patent define the constituents, not the process 6

The fallacy underlying plaintiff's whole position is disclosed by their argument concerning defendant's contention that the claims are barred as being for a result 8

Defendant's position is that the claims are for a result in the sense of the result Perkins was aiming at instead of the means of achieving his result 9

Plaintiff misses the point that Perkins' object was the production of a certain glue and that his invention was the discovery of the necessity of using certain starch ingredients 15

PAGE

The misrepresentation of the evidence by the plaintiff under the headings, "Defendant's glue is not a heavier glue than that of the patent," "Defendant's glue is identical with the glue of the patent" and "Defendant's base is degenerated" 15

(The evidence is set forth in the appendix to this brief.)

Discussion of the character of the starch involved in the *Solva case* 19

Discussion of the lower court cases cited by plaintiff 22

Plaintiff's quotation from *A. B. Dick Co. case* well illustrates the difference between plaintiff's contention and ours 23

Plaintiff's explanation of the statements made in the *Hood-Wright case* discloses the weakness of its position 24

APPENDIX—The evidence as to the character of the defendant's glue base and final glue..... 27

Defendant's base is a heavier base than that of the patent 27

Defendant's resultant glue is a heavier glue than that of the patent 33

INDEX OF CASES.

	PAGES
A. B. Dick Co. vs. Underwood Typewriter Co., 246 Fed., 309	23
Carver vs. Hyde, 16 Pet., 513	14
Corning vs. Burden, 15 How., 252	14
Electric R. Signal Co. vs. Hall, 114 U. S., 87	10
Goodyear, etc., Co. vs. Davis, 102 U. S., 222	11
Knapp vs. Morss, 150 U. S., 221	9
Mitchell vs. Tilghman, 19 Wall., 287	10
O'Reilly vs. Morse, 15 How., 62	14
Packing Co. Case, 105 U. S., 566	12
Perkins Glue Co. vs. Hood-Wright and West Michigan Furniture Co., 279 Fed., 454	24, 25
Perkins Glue Co. vs. Solva Waterproof Glue Co., 223 Fed., 792; 251 Fed., 64	19, 20, 21, 22
Plummer vs. Sargent, 120 U. S., 442	12
Rubber Co. vs. Goodyear, 76 U. S., 788	10
Smith vs. Goodyear Dental Vulcanite Co., et al., 93 U. S., 486	10
Temco Electric Motor Co. vs. Apco Mfg. Co. (Jan. 3, 1928)	14
The Corn Planter Patent, 23 Wall., 181	10
Western Electric, etc., Co. vs. Ansonia, etc., Co., 114 U. S., 447	12
Westinghouse vs. Boyden, 170 U. S., 534	10

IN THE

Supreme Court of the United States

OCTOBER TERM, 1927.

No. 285.

HOLLAND FURNITURE COMPANY,

Petitioner,

vs.

PERKINS GLUE COMPANY.

PETITIONER'S ANSWER TO RESPONDENT'S REPLY BRIEF.

We regret that it is at all necessary for us to file an answer to plaintiff's reply brief and particularly regret that it is necessary to make our answer so extended. We feel, however, that it is necessary because with the record as long and complicated as is the record in this case, it is possible that what we believe to be misinterpretations and misquotations of the record and our briefs might go undetected by the Court.

I.

Plaintiff's reply brief continues to becloud the issue by using the word "process" with a double meaning.

The simple issue of the case is whether the patent is infringed by glue made from starch not having reduced water-absorptiveness within the range described in the patent.

It is impossible to read the patent without seeing that the discovery Perkins made and patented depends upon the choice of a particular and peculiar starch as an ingredient of the glue. Whether that choice is described as a "process" step or as a "product" step does not matter, so long as the real meaning—a choice of ingredients—is clearly understood.

But the point we failed to make clear to the Court below —and that we insist upon making clear in this Court—is that so far as "process" and "product" are involved in the issues presented here, they are both merely statements of a choice of ingredients, and so are as much alike as two sides of a sheet of paper or a shadow and the body that produces it.

The tendency of plaintiff's use of the word "process" with a double meaning is to make it seem that the thing here to be decided is whether the product claims of the patent are limited in their scope to a product made from starch degenerated by a *particular chemical process*. If that were the question here to be decided, this Court, after passing on the question whether there is any patentable invention in the subject-matter claimed, would have to pass on the question whether the *selection* of a starch *within* a particular range of water-absorptiveness is the equivalent of the *creation* of a starch *within* that range, so far as the claimed product is concerned. But there is here involved no such question of equivalents.

It is undisputed that defendant has *not* selected a starch having water-absorptiveness *within* the range measured by the tests of the patent and the only real question is whether the patent shall be given a scope broader than the range measured by the tests defined in the patent—a range of which the only measure is the ultimate utility of the final product (see our Main Brief, p. 7, and our Reply Brief, pp. 73 and 75).

If we accept the whole of plaintiff's argument as to the value of the Perkins veneering glue (and its asserted corollary that the patent on that glue is valid, notwithstanding the prior knowledge of glues so made from starch dissolved in an alkaline solution and even the prior knowledge of glues so made from the particular low water-absorptive starch chosen by Perkins*), still the fact remains that the selection of a particular starch from among starches in general was an essential part of the thing Perkins discovered and patented. And if we accept plaintiff's proposition that Perkins' glue could be produced either by the *creation* or by the *choice* of a starch glue-base having the particular range of water-absorptiveness, and so was independent of the particular chemical process of degenerating the starch base, still the fact remains that starch of that range of water-absorptiveness was essential to the thing Perkins discovered and patented; and, since defendant does not use starch within that range of water-absorptiveness, it does not infringe.

That is the position we took in the Court below. Plaintiff's counsel have in their reply brief lifted from page 2 of our brief in the Court below a sentence to show that our position below was that "the product claims are lim-

*Gerard, Dornemann and Poplar Bluff and plaintiff's reply brief, page 6.

ited to process features," contrary to our present position. So long as plaintiff's counsel persist in using the word "process" sometimes to mean the selection of the starch base, and at other times to mean the chemical process of degenerating the starch base, they continue to confuse the issue, as indeed they have done again on page 15 of their Reply Brief (see *post*, p. 6). In our brief below we pointed out that when we spoke of the idea of the patent as "comprehending the two-step process," we did not intend to exclude a first step that was nothing more than the selection of a starch having water-absorptiveness within the defined range. That we expressed in the following words (quoted from p. 6 of our brief):

> "We do not think it limited the patent to any particular *process* of degeneration, but it certainly did limit it to a particular *degree* of degeneration."

It is true that plaintiff there succeeded, by continued use of the word "process" in a double sense, in confusing the Court below, so that the Court below first said, with the erroneous significance derived from plaintiff's discussion of the processes of treatment of the base, that (R., 648):

> "The defense primarily urged is that the specified process or processes must be so far implied in the claim that defendant does not infringe,"

and answered that supposed defense by asserting, with respect to the product claims, that (R., 648):

> "The specific reference is to the constituents which make up the finished product and is without dependence on the method with which they are combined."

We quite agree that the reference of the product claims is to the "constituents" which make up the finished product. One of those constituents is starch having low water-absorptiveness within the defined range. The words in the claim that define this constituent are general words meaning "starch." Inasmuch as not all starches, but only starches within a medium range,* would answer the purpose, the literal words of the claims have to be helped out by interpretation. It is proper to do so by reference to the specification. There we find the "suitable starch" of "medium range" water-absorptiveness defined by tests described in the original specification and elaborated by reissue (Defendant's Brief, p. 22), and we say that was the measure of the thing discovered and of the thing patented, and the only measure having that requisite degree of certainty that the patent law demands. But plaintiff and the Court below say that the necessary "medium range" quality of starch which is admittedly an essential ingredient of the finished product may be defined, not by its own inherent properties, but by the functional utility of the final composition of matter of which it is an ingredient.

This involves no question of the independent patentability of process and product. It involves only the well-established doctrine of the patent law that no valid claim, whether for a composition of matter or for a combination of mechanical elements, can rest for its definition upon functional statements of the ultimate utility of the compound or combination. We do not think there is any need in the case at bar for any generalized discussion of the patent law or of how a product may be defined. It is enough to consider what was the true nature of the prod-

*Judge Denison's opinion, R., 649.

uct here in question and to apply to the facts of the instant case rules of law that have been established and applied in this Court for many years.

II.

This same confusing double meaning of the word "process" as applied to the particular facts of the case at bar becomes again apparent if we subject to the slightest analysis that part of plaintiff's reply brief on pages 15 and 16, headed "The law does not permit defendant to read the so-called 9 to 1 and 170 degree tests into the glue product claims." Plaintiff's argument here is that "the specified degree of degeneration is a characteristic of the process *not of the product.*" Whatever plausibility that argument has is lent to it by the use of the word "degeneration" (which may connote an act or a state) in place of "water-absorptiveness"* (which correctly connotes only a state). The 9 to 1 boil-up test and the 170 degree hot water test of the patent are not tests that disclose the process of degeneration by which the glue-base has been produced. They are tests that disclose the degree of water-absorptiveness of the base itself, however made. That reduced water-absorptiveness of the glue-base is, of course, carried on into the final glue product. It is the reduced water-absorptiveness of the starch in the final glue product that results in the ample fluidity that Perkins desired. As he says in his patent, the lim-

---

*In the context of defendant's reply brief, from which plaintiff has here quoted, the words "choosing an ingredient of the specified degree of degeneration," were carefully used in juxtaposition with the words "water absorptiveness [degeneration] within the defined range" (Defendant's Reply Brief, p. 2).

ited quantity of water commonly used with animal glue if applied to a starch of higher water-absorptiveness produces a starch glue jellylike and tough and too heavy for easy application; and so unsuited to his specific purpose. It so results because the highly absorptive starch in the finished glue absorbs too much water. This water-absorptiveness, measured by the 9 to 1 boil-up test or by the 170° hot water test, is a characteristic of this essential ingredient of the finished glue, and determines the fluidity thereof.

Plaintiff's counsel in the first part of this section of their brief say:

> "We know of no rule which permits a patentee when claiming a product independently of the process to characterize one of the ingredients by tests to which it can no longer respond,"

but why not? If the final product is one, as in the case at bar, having properties (fluidity) dependent upon a particular range of water-absorptiveness of the starting material, it is not only permissible, but necessary, that the water-absorptiveness should be defined by tests capable of measuring it. The patentee did so define it. His discovery did not go beyond it; the disclosure of his patent did not go beyond it; and his monopoly cannot go beyond it.

We quite agree with plaintiff's counsel (Plaintiff's Reply Brief, pp. 7-8) that within the description of the Perkins patent there is quite a wide range that permits of "considerable variation in the viscosity of the starch base to be used" (p. 7) and that this permitted variation in the viscosity of the starch base will "result in the production of final glues of different viscosities" (p. 8). That is precisely the point. The viscosity of the final glue of the Perkins patent is, of course, dependent upon the

viscosity of the starch base from which it is made. The viscosity of the final glue and of the base is the reciprocal of the water-absorptiveness. And the range of water-absorptiveness that Perkins found would give him the good as animal glue for veneering at which he aimed was the range measured by these tests of the patent.

Could anything show more clearly than the argument plaintiff's counsel here make (pp. 7-8) that these yardsticks of the patent are not, "examples" but are "tests" contrary to what Judge Denison said (R., 650).

At this particular point of plaintiff's reply brief, it is necessary for them to establish that the final glue of the Perkins patent may have greater or less viscosity over a considerable range. To do that, they refer to the range of water-absorptiveness of the glue-base as defined by the 9 to 1 boil-up and the 170 degree hot water test, and correctly say that this range of water-absorptiveness of the starting material effects a corresponding range of viscosity of the final glue. Is it not clear that glue within that range of viscosity is the glue of the patent; and that glue of higher viscosity produced from starch of higher water-absorptiveness is the glue rejected by Perkins because it was jellylike and tough and too heavy for easy application?*

IV.

The proposition advanced under the heading "Defendants objection that the claims are barred as being for a result is untenable" (p. 7) in the reply brief now under

---

***We ought here to insert the caution that plaintiff's argumentative statement of the facts on pages 8 and 9 is, as we read it, and as we fear the Court may read it, a misrepresentation (see post, p. 15).**

consideration discloses the fallacy underlying plaintiff's whole position.

We said with a good deal of confidence in our reply brief (p. 14) that "it is, of course, elementary that a patent cannot be granted for a result"; having reference to the immediately preceding statement that "to give plaintiff a patent, regardless of the degree of degeneration" that Perkins "found to be necessary to the achievement of the result he was aiming at, is to give it a patent, not for the invention Perkins then made—the means of achieving his result,—but for the result itself."*

In reply to that plaintiff says (p. 7) that "practically every product is the *result* of some process, but it is nevertheless still patentable as such"; and they say that we confuse "this well settled rule of law with the rule that the *function of a machine* is not patentable as such."

It is, of course, possible to refer to the product of a process as the "result" of that process and in that sense the product of a process is patentable. But we use the word "result," in the discussion referred to, to mean the *achievement*, as distinguished from the *means of achieving*. And we say that the "medium range" that Judge Denison found to be essential to Perkins' invention must be measured by the limits put upon it in the specification, not "by the functional consideration of ultimate result" (our Reply Brief, p. 15).

Plaintiff's counsel now advance the proposition that in the case of a product—the result of a process—a valid patent may be granted to cover every product that achieves the same purpose. Their argument seems to be that it is only machine patents which must be limited to the means discovered and disclosed. In our reply brief

*See the explicit statement of the rule in Knapp vs. Morss, 150 U. S., 221, 228.

we cited (p. 6) the *Corn Planter Patent* case (23 Wall., 181), to the effect that a patent claim would be void if it covered "a mere result, irrespective of the means by which it is accomplished. But if construed as claiming the accomplishment of the result by substantially the same means described in the specification, it is free from that objection," and we further cited in support of this fundamental rule of patent law, *Electric R. Signal Co.* vs. *Hall*, *Westinghouse* vs. *Boyden*, and *Mitchell* vs. *Tilghman*. Plaintiff's counsel (p. 7) brush these cases aside on the ground that they held merely that "a function of a machine is not patentable,"* as though this rule of law applied only to machine patents and not to process and product patents.

In support of this somewhat extraordinary proposition plaintiffs' counsel cited only *Rubber Co.* vs. *Goodyear* where the word "result" was used to mean the product of a process. It would not have been necessary for plaintiff's counsel to go beyond the litigation in this Court involving Goodyear's hard rubber or vulcanite to find a complete refutation of the idea that it is permissible in a process patent, or in a product patent, to claim the result achieved as distinguished from the means of achieving the result.

This Court in *Smith* vs. *Goodyear Dental Vulcanite* (93 U. S., 486) sustained a patent for making dental plates from vulcanized rubber or other vulcanized material. The product claim was:

> "the plate of hard rubber, or vulcanite, or its equivalent, for holding artificial teeth, or teeth and gums, substantially as described."

---

*Mitchell vs. Tilghman certainly did not involve a machine patent.

In *Goodyear* vs. *Davis* (102 U. S., 222) suit was brought on that patent against an alleged infringer who made dental plates from molded celluloid and this Court held that a celluloid dental plate did not infringe notwithstanding the fact that it had the desirable qualities of the patented vulcanite dental plate. The Court said (102 U. S., 224):

> "It is impossible to read the specification of the original patent, or that of the reissue, upon which this suit is founded, without the conviction that the patentee had in mind primarily a single substance for his material, and that one of a peculiar character, itself a compound discovered and patented not long before" (Goodyear's hard rubber or vulcanite),

and on the question of infringement, after pointing out that defendant's dental plate was made of celluloid, the Court said (p. 229):

> "Undoubtedly it can be employed for manufacturing dental plates and as a base for artificial teeth. Such a plate may have the fineness, lightness and elasticity of a plate made of hard rubber by the Cummings' process; but it is a substance very different from hard rubber and it is incapable of the same manipulation,"

and on page 230:

> "It may be conceded the patentee is protected against equivalents for any part of his invention. He would be, whether he had claimed them or not. But when a product arrived at by certain defined

> stages or processes is patented, only those things can be considered equivalents for the elements of the manufacture which perform the same function in substantially the same way. The same result may be reached by different processes, each of them patentable, and one process is not infringed by the use of any number of its stages less than all of them."

Whether expressed as process or product, the invention of the dental plate, like the invention of Perkins' glue, depended upon the choice of starting material. That choice was inextricably involved in the means invented or discovered by the patentee to effect his ultimate result. The patent was valid to cover that means, but when it was sought to extend it to cover the ultimate result, this Court called a halt.

So, in the *Packing Co. case*, 105 U. S., 566, cited in our main brief (p. 58) and in our reply brief (p. 48), the process and product claims as finally limited by disclaimer were limited to the choice of boiled meat as starting material, and the Court, after holding that there was nothing of invention in the process wherein the meat was subjected to a boiling operation instead of to a broiling, roasting or steaming operation, added (105 U. S., p. 574):

> "Our conclusion is, therefore, that there is nothing new in the process described in the patent. * * * If that claim cannot stand, it follows that the second claim which is for the product made by the employment of the process described in the first claim, is also invalid."

And in *Western Electric Co.* vs. *Ansonia*, 114 U. S., 447, likewise cited in our main brief at page 58 and in our reply brief at page 48, there were process and product patents. The claim of the process patent was:

> "The method of insulating telegraph wire by first filling the pores of the covering and subsequently compressing them, covering and thereafter polishing its surface, substantially as described."

The claim of the product patent was:

> "An insulated telegraph wire, the covering of which has its pores filled and its surface polished, substantially as described,"

and this Court said (114 U. S., at p. 449):

> "It is clear that the two patents must stand or fall together. If the patent for the process is invalid so must be the patent for the product."

And see *Plummer* vs. *Sargent*, 120 U. S., 442, where the invention depended upon the choice of a thin film of oil as the first step in an invention which was claimed both as product and process, and this Court held that the product claim was limited to a product produced by the use of such a thin film of oil in the process; refusing to uphold a charge of infringement based wholly on comparison of defendant's product with the final product of the patent.

This fundamental error runs through everything plaintiff's counsel say (pp. 17-19) to the effect that when a product claim does not give proportions (and we assume that they also mean when it does not definitely state qualities), it will be interpreted by reference to the specification to include suitable proportions (or qualities). That is, of course, true if the suitable proportions (or qualities) are clearly stated in the specification. But in looking for such a clear statement of suitable proportions (or

They then proceed, argumentatively, to establish their asserted proposition that "defendant's glue is not a heavier glue than that of the patent." That could be done, either (1) by showing that defendant's glue has the viscosity of a glue made from starch which registers 48 on the 9 to 1 boil-up test (which is, as they say [pp. 7-8], the high limit of the Perkins range), or (2) by showing that the water-absorptiveness of defendant's glue-base on the 9 to 1 boil-up test does not register more than 48 seconds.

But all the evidence is that defendant's final product—the glue—is more viscous than the glue of the patent; and is so because defendant's glue-base has water-absorptiveness higher than the upper limit of the Perkins range (post, p. 27).

Counsel follow their correct assertion that the experts on both sides are agreed that there is a wide range within the description of the patent by the erroneous assertion that Dr. Grosvenor in his testimony (R., 72-73) is "comparing the *usual* viscosity of Perkins glue with the *range* of viscosity of Perkins glues which he had observed by varying the length of agitation and heat, etc."

It must be that plaintiff's counsel do not understand Dr. Grosvenor's testimony at this point. If they did, they could never make that erroneous assertion. Dr. Grosvenor's testimony that certain measurements of the actual viscosity of glue showed a drop during the mixing operation from over 250,000 to 60,000 referred, as the context shows, to glues made from raw starch. There are many kinds of raw starch, from the high viscosity cassava and potato starches down to the low viscosity corn starches, and Dr. Grosvenor does not tell us what raw starches showed this great drop in viscosity during the mixing operation. He does proceed, however, to state "The usual viscosity of the Perkins glues as mixed

up in accordance with the description of Perkins" as compared with the viscosity of the "finished glue of the defendant" and what he says is in full confirmation of what Dr. Grossman said—that defendant's final glue is more viscous than the Perkins glue (post, p. 35). Dr. Grosvenor found by actual measurement that at the end of the mixing operation "glues as mixed up in accordance with the description of Perkins" had a viscosity "of say 125 or 126,000; it swings somewhat up and somewhat below that" and that the "finished glue of the defendant in this instance was 156,000." When plaintiff's counsel say, as they do (p. 8) that the starch referred to by Dr. Grosvenor in this testimony as dropping in viscosity from 250,000 to 60,000 during mixing was "certain of Perkins glues," they misrepresent the testimony. The testimony was that it was glue made from some unidentified raw starch.

When they say that Dr. Grosvenor testified that the glue showing a viscosity of 125 to 126,000, swinging somewhat up and somewhat below that was the Perkins commercial product, they misrepresent the testimony. What Dr. Grosvenor said was that it was "glues as mixed up in accordance with the description of Perkins," meaning, of course, the description of the Perkins patent.

At the bottom of page 8 and top of page 9, counsel conclude their argumentative statement of this evidence in words which seem to say that both experts agree that "the viscosity of defendant's glue falls well in the middle of" the "wider range" indicated in the patent—referring back to the range measured by the 9 to 1 boil-up test and the 170 degree hot water test. The fact is that the viscosity of defendant's glue depends directly upon the water-absorptiveness of the starting material, and defendants conclusively proved (Defendants' Reply

Brief, p. 36) and plaintiff's counsel no longer deny (Plaintiff's Brief, p. 159), that the water-absorptiveness of defendant's starch is above that range.

So, proceeding on page 9, plaintiff's counsel quote from page 403 of the record a sentence from the testimony of Mr. Stephan, who, they say, was "comparing defendant's Kane glue here involved with Perkins glue." If the Court will refer to that page of the record it will see that Stephan's statement was made with respect to vegetable glue 'omitting purchases from the Perkins Glue Company," and his statement was made, so far as he could remember, only with respect to the Kane glue. He said, "I tried out another kind, whether it was Kane or International, that I am confused about."* His testimony means nothing in the face of Dr. Grossman's positive testimony that defendant's glue is heavier than the Perkins glue and so much heavier that it cannot be handled by the same machinery (post, p. 35).

Plaintiff's counsel proceed to discuss Dr. Grossman's testimony and attempt to make out that Grossman testified that defendant's base was heavier *before it is cooked up* but is not heavier after it is cooked up. They make this assertion notwithstanding the fact that the very testimony they quote (bottom of p. 9) is that "Our base *cooked up—and put in a spreading machine,* is heavier than the Perkins glue base, proving that there is less degeneration in a raw hard starch than when it has been treated and softened," and then they quote from page 61 only the words "It is heavier for the same

---

*In spite of this sentence, plaintiff's counsel say at another place in their reply brief (p. 13) that the glue Stephan testified about included "also the so-called International glue." They seem to have resolved Mr. Stephan's confusion to suit their own purpose.

amount of water added," omitting the immediately preceding words "As to Kane Company's *finished cooked up glue as compared in viscosity with the finished glue of Perkins.*"

It is not by any such expedients as this that plaintiff's counsel can sustain their assertions that "Defendant's glue is not a heavier glue than that of the patent"; that "Defendant's glue is identical with the glue of the patent"; and that "Defendant's base is degenerated" (Plaintiff's Reply Brief, pp. 7-15, inclusive). For the convenience of the Court we print at the end of this brief (post, pp. 27-35) the testimony on the subject just as it stands in the record.

VI.

(a) Plaintiff's counsel say (Reply Brief, pp. 28-30) that our statements with regard to the *Solva case* are misleading, and repeat their assertion that in the *Solva case* there was no evidence that defendant's raw starch there responded to either the 9 to 1 or 170 degree tests.

If this Court will refer to Judge Sanborn's opinion in the *Solva case* (223 Fed., 792, at p. 798), it will find a statement of what defendant's infringement there complained of was. Up to August, 1912, Solva Company used the Perkins alkali degeneration process of the second patent and thereafter made a slight modification in the alkaline converting reagent. As to this processed glue-base, Judge Sanborn said:

> "The Perkins tests were used to determine when the starch had been properly processed";

and plaintiff's counsel in their present reply brief say (p. 28) that it "probably fell within the 9 to 1 boil-up test."

Judge Sanborn, referring to the raw cassava starch used by defendant in the *Solva case,* said:

> "It often happens that cassava glue-base can be used without any processing by the first step, in which case *it is tested* and sent to customers in its original state." (Emphasis ours.)

As we pointed out in our reply brief (pp. 31-32) and in our main brief (p. 71), plaintiff's counsel in their brief in the *Solva case* said:

> "It appears that the defendant Solva Company has shipped some particular and peculiar cassava dry glue-base to their customers, which they did not treat or process at all. * * * it * * * behaved just like the processed goods when tested. * * * Defendants tested it out first in the same way they did the processed goods * * * and it tested the same."

Of defendant's processed glue-base in that suit plaintiff's counsel said in their brief (p. 9):

> "and the degeneration was carried to and stopped at the critical point specified by Perkins."

And they left no doubt as to what that critical point was. On page 11 of their brief they state (see our Reply Brief, p. 33):

> "And Perkins' original specification told just how far to carry the degeneration or preliminary treatment of the starch to get this result. * * * it pointed out the exact stopping point of the degeneration by stating that it should be carried to the

'point where the base if mixed with from two or three parts of water and subjected to heat of 170 degrees F. would result in a syrupy condition instead of a thick, jelly-like mass.' "

It is clear, therefore, that when plaintiff's counsel in the *Solva case* represented to the Court that the raw starch there involved "behaved just like the processed goods when tested. * * * Defendants tested it out first in the same way they did the processed goods and it tested the same," they represented that the raw starch there involved had water-absorptiveness responding to the tests of the patent.

This understanding of the Court in the *Solva case* is important here primarily because the Court below was misled into supposing that the defendant's untreated starch in the *Solva case* was of high viscosity like the Kane base here (see our Reply Brief, pp. 70-71).

(b) Plaintiff's counsel admit (Reply Brief, pp. 29-30) and bottom of p. 14) that in the *Solva case* the raw starches which had been used at Poplar Bluff, and which plaintiff there differentiated to save its patent from invalidity because of the Poplar Bluff prior use, were tested by the 9 to 1 boil-up test. But they say (p. 14):

"defendant does not use any such high viscosity starch";

and (p. 29):

"these were many times more viscous than those which responded to the 9 to 1 boil-up test."

But here we have actual records of physical measurements which cannot be altered or misconstrued by argu-

ment. If the Court will refer to pages 32 and 33 of our reply brief, it will find examples (stated by plaintiff's counsel) of the raw starches excluded from the scope of the patent by plaintiff in the *Solva case.* Lot 63 showed a viscosity of 40 at 16 to 1. Defendant's starch here shows a viscosity of 57 (Grosvenor, R., p. 76) at 20 to 1. At 16 to 1 it would, of course, show a higher viscosity than 57. Defendant's starch here is consequently shown by these recorded tests, both of which were made by plaintiff's expert, to be a starch of *higher* viscosity than the starch excluded in the *Solva case.*

It is absolutely and demonstrably untrue that "defendant does not use any such high viscosity starch" as was included among the raw starches used at Poplar Bluff and excluded by plaintiff from the scope of the patent to have its claims in the *Solva case.*

VII.

The cases cited in the appendix and on pages 3-5 of plaintiff's reply brief as illustrating different ways in which products may be identified are sound enough in so far as we have had time to examine them. They all proceed on the principle that the claim should, if the literal language permits it, be liberally interpreted in the light of the specification to cover neither more nor less than the real invention. There is not in them any support for the idea that the ingredients of a chemical compound, or any one of those ingredients, is sufficiently defined by words descriptive of the final utility of the compound. Manifestly there can be no valid claim for a chemical compound in which one of the ingredients is left without positive identification and is assumed to be any ingredient whatsoever which will, when added to the other identi-

fied ingredients, effect the stated result to be achieved. Just in so far as such attempted definition of one of the ingredients by the functional properties of the final compound extends beyond the range of ingredients that the inventor has found suitable to effect his intended purpose, the claim will unlawfully extend beyond the means invented.

We do not think it is necessary to discuss these lower court cases, referred to by plaintiff's counsel, in any detail, but we point out that the portions of the claims quoted by plaintiff's counsel do not, in most instances, give a correct idea of the matter before the Court in those cases. For example, in the first case cited by plaintiff—*A. B. Dick Co.* vs. *Underwood Typewriter Co.*, 246 Fed., 309—the expression quoted "a stencil blank capable of being stencilled" was used merely as an introductory expression, not as a definition of the invention. The claim there in suit defines the invention as follows: "consisting of a dry but hygroscopic sheet of fibrous material impregnated with a coagulated colloidal substance and a tempering agent, substantially as described." This quotation well illustrates the difference between plaintiff's contentions and ours. The expression, "a stencil blank capable of being stencilized" is, in our view, similar to the Perkins claim as contended for by the plaintiff—" vegetable glue as good as animal glue." If in the *A. B. Dick case* the claim had said "a stencil blank capable of being stencilized" and nothing more, we think the claim would have been invalid as defining nothing more than the object to be attained. Evidently the plaintiff is of the view that such a claim would be valid.

And so likewise with all the other lower Court cases cited on pages 3 to 5 and in the Appendix to plaintiff's reply brief. An examination of them affords no support for plaintiff's contention that the quality of the starch

ingredient of the Perkins glue is sufficiently defined by stating the ability of the final glue to do the work of animal glue.*

VIII.

Plaintiff's only comment on the disclaimer is to attempt to explain away the very damaging statements which were made by plaintiff's counsel in the *Hood-Wright case.* It seems to us that in attempting this the plaintiff merely discloses the weakness of its position and the extent to which it is forced to go in order to hold the present defendant as an infringer of its patent.

It is not our contention that these remarks of counsel are binding upon the plaintiff and that solely because of these remarks defendant escapes infringement. Our position is that regardless of what invention Perkins made and regardless of what invention he might have claimed, the plaintiff cannot now hold the defendant for operating within the field which was specifically disclaimed. We

---

*In connection with this part of plaintiff's reply brief (pp. 2-5) we call the Court's attention to the fact that plaintiff's counsel now say (p. 2) "we contend that the product here claimed is new in and of itself and independently of the use to which it is put," and (p. 5) "When the claim characterizes the glue as a wood and fiber glue or as a glue having the properties of animal glue, that is not referring to its use. That is characterizing the glue, not by the use to which it may or may not be put by its physical characteristics. * * *"

It does not seem to us that counsel can reconcile this with the admission in their main brief at page 29 (see our Reply Brief, footnote, p. 20) that "the only way to tell whether a particular starch will make a glue as good as animal glue is to make up the glue and use it on a commercial scale in a furniture veneer gluing factory.

cite plaintiff's counsel's remarks in the *Hood-Wright case* to show that not only the effect of the literal wording of the disclaimer is to free this defendant from any charge of infringement, but that this was the interpretation which plaintiff's counsel themselves put upon the disclaimer. For plaintiff's counsel to now attempt to retract or limit what they said in the *Hood-Wright case* seems to us to be quite on a par with their attempt to retract or limit the disclaimer itself.

When counsel now amend the statement they made to Judge Sessions in the *Hood-Wright case* by substituting (footnote, p. 28) for the words,

> "You would not have our invention under those circumstances. We do not want to cover that; the defendant may do that. Therefore, we disclaimed that,"

the words—

> "You would not have our (claim 13 process) invention under those circumstances. We do not want to cover that (in claim 13); the defendant may do that (so far as claim 13 is concerned). Therefore, we disclaimed that (from claim 13)."

It seems to us they manifest clearly enough the accuracy of Judge Geiger's remarks (Appendix to our Reply Brief, pp. vi and vii), as follows:

> "Surely these disclaimers proceed upon the hypothesis that glue may be made, as in such disclaimed claims directed, even if the starch is not degenerated *as specified in the patent;* and it will not do to argue that merely because a glue so made turns out to be good-as-animal glue, therefore, the *precise degeneration reserved* by the disclaimer *must be assumed* to have entered into the process *in the man-*

ner specified, and therefore into the product. If the result in the Solva Case is not as Judge Sanborn states it; if, notwithstanding the language of the Court, any starch glue, good-as-animal glue, is within the Perkins monopoly,—then the entire patent, as Judge Sanborn considered and upheld it, is now reclaimed, not only from the decree of the appellate court but also from the plaintiff's express disclaimer."

And when we look at Judge Denison's answer to this proposition (R., 658-659), in the light of the fact which we trust is now understood, that defendant's assertion is that the effect of the disclaimer was to limit the patent to glue made from a starting material of "the less than high viscosity indicated by the teachings of the patent to be necessary to produce the result" and not that the effect of the disclaimer was to limit the choice of the patent "to the base which had been degenerated in the manner specified in the patent," then it will be seen that all Judge Denison said about process and product, and all that he said about the effect of the disclaimer, merges into the single question whether "the less than high viscosity indicated by the teachings of the patent to be necessary to produce the result" is to be measured by the tests of the patent as we contend, or by the functional statement of ultimate result "as good as animal glue for veneering," as plaintiff contends and as the lower Court decided.

Respectfully submitted,

March 23, 1928.

CHARLES E. HUGHES,
WILLIAM H. DAVIS,
JAMES A. WATSON,
R. MORTON ADAMS.

APPENDIX.

The Evidence as to the Character of the Defendant's Glue Base and Final Glue.

Defendant's Base Is a Heavier Base Than That of the Patent.

On this subject, plaintiff's expert, Dr. Grosvenor, testified:

(P. 35:)

"* * * The base was substantially the same as that described in the Perkins patent in suit, and examined under the microscope it showed the form of the granules substantially unchanged when wetted with cold water. The base when heated with water to one hundred and seventy degrees produced a workable heavy fluid similar to the glue, not a stiff unworkable jelly. The base when mixed with two to three parts of water and caustic soda, produced a glue like Perkins' glue, and the base therefore corresponded to most of the characterizations given in the Perkins patent; the nine to one boil-up test given in the patent is specially mentioned in connection with the acid treated or processed cassava, so that that wouldn't be expected to necessarily apply; and it showed a very high figure on that test. The microscopic examination showed that the base consisted practically of cassava with perhaps a trace of potato or corn, not a considerable proportion of all."

(P. 36:)

"* * * The base examined as such before mixture was, as I said, a high viscosity base, it was verging

toward the upper limits of the preferred description in the Perkins patent in suit. It was within that range, but I think in the practice of mixing up in the factory the prolonged stirring subsequent and application of heat subsequent to the addition of caustic brought it even further within that range effectually."

(R., p. 39:)

"The sample of the Kane glue obtained at the Holland Furniture Company plant did not fall within that test [the 9 to 1 boil-up test]. As I explained, one doesn't expect the glue-base to fall within that test unless it is a base which has been acid processed from high viscosity raw cassava."*

As to actual measurements of the viscosity of defendant's base, Dr. Grosvenor testified:

---

*That this last assertion is untrue, see our reply brief, pages 34-35, the Grosvenor's subsequent testimony:

(R., p. 77:)

"* * * with the Perkins glue base, we generally boil at 9 to 1."

(R., p. 132:)

"I don't think it was made quite clear—you spoke of this patent No. 1,020,656, and the process of that patent by which the starch was put into the proper form by an ALKALI TREATMENT. Do you mean to infer that that was the process which Perkins Glue Company use? A. Is commercially using today and has used almost continuously since it was discovered."

(R., p. 76:)

"Q. When you took this sample of the defendant's glue-base did you make a like test on that? A. A boil-up?

Q. This boil-up viscosity test on the 20 to 1 solution? A. Yes; 57* was the viscosity of that on that boil-up test."

In plaintiff's patent No. 1,299,809 of April 8, 1919 (R., 632), it is said:

"The following, however, will give a general idea of the relation of the two scales. A degenerated cassava starch having a viscosity of 22-23 at 20 to 1 showed a viscosity of 49-55 at 9 to 1. A relatively raw cassava starch having a viscosity of 36-37 at 20 to 1 showed a viscosity of 110-115 at 9 to 1. A raw cassava starch having a viscosity of 44-47 at 20 to 1 showed a viscosity of about 745 at 9 to 1."

Defendant's expert, Mr. Grossman, testified as to defendant's base:

(R., p. 48:)

"Pure cassava flour, pure in the sense that it has no adulteration or mixture or other starches • • • G. T. A. brand and sometimes G. T. G. which is identical with G. T. A. • • • The only treatment we give it in our plant is a sieving process to remove impurities, such as lint, sticks, sometimes we find a

---

*The Court will understand that viscosity of 48 is the upper limit of the range of the Perkins patent on the 9 to 1 boil-up test (Plaintiff's Reply Brief, top of p. 8).

few bolts and other foreign matter * * * it receives no chemical treatment of any sort. It just goes through our sieves and falls into a hopper and is re-bagged. * * * No process of degeneration at all."

(P. 52:)

"* * * The small amount of degeneration which Dr. Grosvenor spoke of in his testimony which goes on in a kettle is proportionately the same for any glue base, the action of caustic soda tends to break down the starch, but the degeneration which does take place is negligible.

The Court asked, if I understand you rightly, the base employed by your concern is not degenerated starch? The witness replied: It is not.

The Court: At any stage?

The Witness: It is not."

(P. 60:)

"* * * As to whether it is true that more or less degeneration occurs in the starch after the caustic has been added in the mixing of the starch and during the heating, during the continued heating and stirring for fifteen minutes to a half hour, no more degeneration than would occur with the Perkins or any other base, in fact, less, because the raw material is harsher than a processed starch. Degeneration will be less marked on a starch of higher viscosity than one which has already been degenerated to some greater extent."

(P. 61:)

"* * * As to whether I can swear positively of my own knowledge that there has been no degeneration

in the cassava starches sold by the Kane Company as base for glue at any stage, that is in Java or elsewhere, or by any means such as natural causes or otherwise, to the best of my knowledge, I will."

(P. 79:)

"The results I have tabulated are as follows: Kane base at the end of the first hour 145 seconds, the Perkins base, 80 seconds.

* * * * * *

Water depending on temperature will be 26 to 30 seconds, the average is 28 seconds at 60 degrees Fahrenheit for the water."

(P. 512:)

"* * * The actual figure therefore is 100 seconds which will be the viscosity of the starch. This is Holland Furniture Company base."

(P. 513:)

"* * * It reads sixty seconds and three-fifths. The viscosity therefore of the Perkins glue base is sixty and three-fifths."

(P. 515:)

"* * * the Kane [base] shows a viscosity of one hundred; the Royal shows a viscosity of 166 1/5; the Perkins shows a viscosity of only 60 3/5. * * * The difference between the Kane and Royal as compared to the Perkins is due to the fact that neither

Kane or Royal are in so degenerated a state as shown by the Perkins patent. What I mean by saying 'degenerated' is the fact that they are not degenerated at all, they are not the results of any chemical treatment whatsoever, and we have found out and we know that the Perkins sample which we have is a so degenerated base by virtue of its chemical treatment."

(R., p. 518:)

"* * * water * * * will run between 26 and 30."

The Report of the Special Master.

(P. 604:)

"The testimony taken before me was elaborate and completely covered the field. I listened to it with interest and have considered it with great care and come to the deliberate conclusion that, except as may be inferred by the conclusion that the Kane glue base must have been degenerated because the ultimate rsult is the Perkins glue, no degeneration whatsoever has been proved independently. All the testimony points to the contrary and especially the test experiment prescribed in the patent and conducted in my presence on the premises of the Grand Rapids Gas Light Company as described in the testimony."

(NOTE.—The testimony as to this test is on the record at pp. 574-575, where Grossman stated at the conclusion of the test:

"I have here a thick jelly-like mass, rubbery in appearance and livery-like liver.")

The Decree of the District Court.

(R., p. 637:)

"Second. That the defendant Holland Furniture Company has not infringed upon the exclusive rights accrued to plaintiff by said reissued Letters Patent No. 13,436 by employing processes and making and using products wherein the starch base used was furnished to defendant by the Kane Manufacturing Company of Chicago and is known herein as the Kane base."

Defendant's Resultant Glue is a Heavier Glue Than That of the Patent.

On this subject plaintiff's expert, Dr. Grosvenor, testified:

(R., p. 35:)

"The base was substantially the same as that described in the Perkins patent in suit.*

It had all the fluidity, penetration, adhesive and cohesive characteristics of the glue of the Perkins patent,* and substantially all those of the animal glue for veneering work."

(P. 38:)

"Q. Is the final glue made by the defendant's the same actual and industrial technical product as the

*See footnote next page.

final glue of the patent in suit?* A. It is."

As to the actual measured viscosity of defendant's glue and the glue of the Perkins patent, Dr. Grosvenor said:

(R., p. 73:)

> "The usual viscosity of the Perkins glues as mixed up in accordance with the description of Perkins is in the vicinity of say 125 or 126,000; it swings somewhat up and somewhat below that; that is purely a question of the practical working of the glue on the veneers. The finished glue of the defendant in this instance was 156,000 * * *."

As to the character of defendant's final glue, defendant's expert, Dr. Grossman, testified:

(P. 51:)

> "* * * the method employed in cooking up our glue which is a more viscous material, must be altered

---

*What Dr. Grosvenor meant by "the glue of the Perkins patent" is shown by the following:

(R., p. 45:)

> " * * * What I have always regarded as the critical test given in the patent in suit, the test of whether when made up with between 2 and 3 parts of water the base would make a glue having properties of Perkins glue";

and (R., p. 73):

> "The Court: Then I take it your conclusion is this: if the resultant glue ready for use was satisfactory and sufficient for glueing veneers, the starch at some stage, either prior to its treatment or during its treatment, was degenerated? A. It was, that is my opinion."

from the method employed by the Perkins Glue Company in cooking up their glue. In order to overcome these difficulties we designed different types of glue mixers which have bottom and side scrapers. Our stuff is heavier, and the heavier the glue base from a business standpoint of viscosity, the quicker it drops to the bottom of the kettle, before it is cooked up. We put in bottom scrapers and side scrapers and then made the kettle doubly agitated * * *, because in a Perkins converter, our glue would just swing along on one agitator; in short, to overcome that we had to throw in another set and break it up."

(P. 59:)

"As to whether material which the Kane Company has been shipping can be mixed on a Perkins mixer, well, not satisfactorily, because we always get into trouble, the Perkins kettle is conical at the bottom, and they have no means of scraping the material at the bottom, and when caustic soda is put in and sufficient agitation is not produced at the bottom, why, it balls it up and gums it along."

(Pp. 60-61:)

"* * * I might state that the glue—our glue base cooked up—and put in a spreading machine, is heavier than the Perkins glue base, proving that there is less degeneration in a raw hard starch than one which has been treated and softened."

(P. 61:)

"As to Kane Company's finished, cooked-up glue as compared in viscosity with the finished glue of Perkins, it is heavier for the same amounts of water added."

Vol. II

TRANSCRIPT OF RECORD

Supreme Court of the United States

277

12

OCTOBER TERM, 1927

No. 285

HOLLAND FURNITURE COMPANY, PETITIONER,

vs.

PERKINS GLUE COMPANY

ON WRIT OF CERTIORARI TO THE UNITED STATES CIRCUIT COURT OF APPEALS FOR THE SIXTH CIRCUIT

649

PETITION FOR CERTIORARI FILED JUNE 8, 1927

CERTIORARI GRANTED OCTOBER 17, 1927

(32,737)

(32,737)

SUPREME COURT OF THE UNITED STATES

OCTOBER TERM, 1927

No. 285

HOLLAND FURNITURE COMPANY, PETITIONER,

vs.

PERKINS GLUE COMPANY

ON WRIT OF CERTIORARI TO THE UNITED STATES CIRCUIT COURT OF APPEALS FOR THE SIXTH CIRCUIT

VOLUME II

INDEX

	Original	Print
Final decree	599	637
Petition for appeal	600	638
Order allowing appeal	600	638
Assignments of error	601	639
Bond on appeal (omitted in printing)	602	
Citation and service (omitted in printing)	603	
Stipulation re transcript of record	604	640
Order reviving cause	608	644
Proceedings in the United States circuit court of appeals, sixth circuit	609	645
Appearance of counsel (omitted in printing)	609	
Argument and submission (omitted in printing)	609	
Decree	609	645
Opinion, Denison, J	609–1	645
Motion to stay mandate	609–17	660
Petition for leave to file bill of review	609–17	661

JUDD & DETWEILER (INC.), PRINTERS, WASHINGTON, D. C., JANUARY 17, 1928

	Original	Print
Order to show cause and stay mandate	600-21	666
Clerk's certificate (omitted in printing)	600-21	
Additional transcript of evidence filed in United States district court—Evidence introduced from case of Perkins Glue Company vs. Solva Waterproof Glue Co.	600-27	667
Interrogatories to plaintiff and answers thereto	610	668
Testimony of Frank Baker	620	678
James R. Pearce	633	686
James G. Greenup	637	698
Steven Johnson	641	702
F. E. Roberts	643	704
Lem Baker	647	709
Charles Langlotz	652	711
Frank Shanley	657	719
Nelson Windsor	657	720
Julius B. B. Stryker	667	731
William H. Wenrick	712	780
George L. Frost	716	785
Plaintiff's Exhibits 3 to 9—Trade paper articles re Perkins glue	720	789
Plaintiff's Exhibit No. 79—Process records	797	806
Stipulation to Poplar Bluff use	839	907
Defendants' Exhibits—Windsor letters Nos. 1 to 77	846	911
Stipulation re certain evidence, etc	893	960
Plaintiff's Exhibits—Baker letters Nos. 11 to 16	894	961
Defendants' Exhibits—Perkins letters Nos. 1 to 21 and Perkins' letter of May 30, 1907	898	965
Perkins' invoices Nos. 1 to 6	920	988
Tank invoice	923	991
Extracts from books of Walker Garetson Co.	923	991
Schield invoices Nos. 1 to 6	924	992
Day Rubber Co. invoices	930	998
Brooklyn Cooperage invoices and papers Nos. 1 to 25-A	931	999
Plaintiff's Exhibit 82—German patent office papers	980	1039
Defendants' Exhibit 3—File-wrapper, contents of original Perkins patent No. 1,020,655	992	1052
Stipulation re transcript	1167	1188
Clerk's certificate (omitted in printing)	1167	
Order allowing certiorari	1168	1189

[fol. 598 & 599] IN UNITED DISTRICT COURT

FINAL DECREE

This case having come on to be heard on rehearing after reopening to permit defendants to introduce further evidence and proofs in the case, and the Court being fully advised in the premises it is

Ordered, Adjudged and Decreed as follows:

First. That reissued Letters Patent of the United States, No. 13436, are good and valid as to claims 13, 28, 30, 31 and 38 thereof, and that the Perkins Glue Company, plaintiff herein, is the sole and exclusive owner of said Letters Patent and of all rights and privileges secured thereunder, and also of all claims and demands whatsoever arising from infringement of said Letters Patent.

Second. That the defendant Holland Furniture Company has not infringed upon the exclusive rights accrued to plaintiff by said reissued Letters Patent No. 13436 by employing processes and making and using products wherein the starch base used was furnished to defendant by the Kane Manufacturing Company of Chicago and is known herein as the Kane base.

Third. That the said Holland Furniture Company defendant has infringed upon the exclusive rights secured to plaintiff by said reissued Letters Patent No. 13436 and particularly as to claims 13, 28, 30, 31 and 38 thereof, by employing processes and making and using products wherein the starch base used was purchased by defendant from Solva Waterproof Glue Company and from International Process Company.

Fourth. That no profits have accrued to the defendant Holland Furniture Company by reason of said infringement.

Fifth. That a perpetual injunction be issued out of and under the seal of this Court against the said defendant, the Holland Furniture Company, enjoining and restraining it, and its officers, directors, servants, agents, attorneys, associates, successors, confederates, salesmen, workmen and any person acting for or on behalf of said defendant, from using processes and from making, using or selling products

in infringement of said Letters P tent, and from directing or contributing to or aiding or abetting any such infringement by others.

Sixth. That neither party recover costs; each party to pay its own costs.

C. W. Sessions, United States District Judge.

Approved as to form Mar. 17, 1924.

[fol. 600] IN UNITED STATES DISTRICT COURT

PETITION ON APPEAL—Filed Sept. 9, 1924

The above named Plaintiff, Perkins Glue Company, a Corporation of Delaware conceiving itself aggrieved by the final decree made and entered in the above entitled cause on or about the 17th of March, 1924, hereby appeals from said decree to the United States Circuit Court of Appeals for the Sixth Circuit for the reasons specified in the assignment of errors filed herewith and prays that this appeal may be allowed and that a citation may issue directed to the defendants commanding them to appear before the United States Circuit Court of Appeals for the Sixth Circuit to do and receive what may appertain to justice to be done in the premises, and that a transcript of the record, proceedings and papers upon which said decree was made, duly authenticated, may be sent to the United States Circuit Court of Appeals for the Sixth Circuit.

Perkins Glue Company, by Knappen, Uhl & Bryant, Solicitors. Gorham Crosby, of Counsel.

IN UNITED STATES DISTRICT COURT

ORDER ALLOWING APPEAL

The foregoing appeal is hereby allowed this 9 day of Sept. 1924 and the Plaintiff ordered to file a cost bond in the sum of Two Hundred and Fifty Dollars ($250.00) with surety to be approved by the Clerk of this Court, to secure the defendants their costs on appeal.

C. W. Sessions, U. S. Judge.

[fol. 601] IN UNITED STATES DISTRICT COURT

ASSIGNMENT OF ERRORS—Filed Sept. 9, 1924

And now comes the plaintiff in the above entitled cause and says that in the record and proceedings therein, there is manifest error in this, to wit:

1. The Court erred in decreeing that the defendant, Holland Furniture Company, has not infringed upon the exclusive rights accrued to plaintiff by Reissued Letters Patent No. 13436, by employing processes and making and using products wherein the starch base used was furnished to defendant by the Kane Manufacturing Company of Chicago and is known herein as the Kane base.

2. The Court erred in not decreeing that the defendant, Holland Furniture Company, has infringed upon the exclusive rights secured to plaintiff by said Reissued Letters Patent No. 13436 and particularly as to claims 28, 30 and 31 thereof, by making and using products wherein the starch base used was furnished to defendant by the Kane Manufacturing Company of Chicago and is known herein as the Kane base.

3. The Court erred in decreeing that no profits have accrued to the defendant, Holland Furniture Company, by reason of said defendant's infringement of said Letters Patent.

4. The Court erred in not confirming the Masters Report and in not decreeing that the Defendant, Holland Furniture Company purchased and used 121,149 pounds of glue base because of the use of which it infringed the product claims of the Plaintiff's patent in suit and that its savings because of said infringement amount to $30,802.55.

5. The Court erred in not decreeing that defendant Holland Furniture Company pay to the plaintiff the said sum of $30,802.55 together with interest thereon from the date of the Master'- report.

6. The Court erred in decreeing that neither party recover costs; each party to pay its own costs.

7. The Court erred in not decreeing that Plaintiff recover its costs to be taxed by the Clerk.

8. The Court erred in not decreeing that plaintiff have judgment and execution for the sums above mentioned to be paid to it by defendants.

Knappen, Uhl & Bryant, Solicitors for Plaintiff.
Gorham Crosby, of Counsel for Plaintiff.

[fol. 602] Bond on appeal for $250.00 omitted in printing.

[fol. 603] Citation in usual form, showing service on Wm. H. Davis, omitted in printing.

[fol. 604] IN UNITED STATES DISTRICT COURT

STIPULATION RE TRANSCRIPT OF RECORD

It is hereby stipulated and agreed by and between counsel for the respective parties, that the printed transcript of record on plaintiff's appeal herein, shall consist of the pleadings, testimony, exhibits and papers, as follows:

Vol. 1

1. Bill of Complaint.
2. Defendants' Answer.
3. Interrogatories to Defendants (Pltf's. Ex. 15).
4. Answer to said Interrogatories (Pltf's. Ex. 16).
5. Amendment to said Answers (Pltf's. Ex. 17).
6. Stipulation of April 18, 1921 (Pltf's. Ex. 1).
7. Stipulation of April 5, 1921 (Pltf's. Ex. 18).
8. Statement of testimony adduced at the trial:
(a) Testimony of William M. Grosvenor (Prima facie).
(b) Testimony of A. N. Grossman.
(c) Testimony of Carl Brush.
(d) " " Arthur Schepel.
(e) " " John Erickson.
(f) " " W. M. Grosvenor, recalled in rebuttal.
(g) Testimony of A. N. Grossman, recalled.
9. Statement of Evidence introduced under stipulation from the case of Perkins Glue Company vs. West Michigan Furniture Co. et al.:
(a) Testimony of J. B. B. Stryker.
(b) " " Frank B. Shields.
(c) Deposition of Glover M. Birk.
(d) Deposition of Presley M. Stewart.
(e) Testimony of W. M. Grosvenor (prima facie).
(f) Testimony of George P. Hummer.

(g) Testimony of R. C. Wendt.
(h) " " Otto Kreiger.
(i) " " J. H. Veneklaasen.
(j) " " Chas. C. Pennington.
(k) " " P. C. Huntley.
(l) " " Robert M. Birk.
(m) " " Fred E. Hood.
(n) " " Charles Worfel.
(o) " " Carl S. Miner.
(p) " " W. M. Grosvenor, recalled in rebuttal.

[fol. 605] 10. Notice of Sept. 22, 1919 (Pltf's. Ex. 10).
11. Reply to said notice (Pltf's. Ex. 11).
12. Notice (Pltf's. Ex. 12).
13. Disclaimer (Pltf's. Ex. 20).
14. Starch Diagram (Pltf's. Ex. 22).
15. Armour Glue List (Pltf's. Exhibit).
16. Forest Prod. Lab. Bulletin (Defts.' Ex. C).
17. " " " " (Defts.' Ex. D).
18. Reissue Letters Patent 13,436 in suit (Pltf's. Ex. 2).
19. Marsden U. S. Patent 376,445 (Defts.' Exhibit).
20. Higgins " " " 579,827 " "
21. Higgins " " " 642,329 " "
22. Cerf " " " 698,632 " "
23. Anderson " " " 769,289 " "
24. Haake " " " 813,647 " "
25. Roret Article on Apparatin (Defts.' Ex. R) translation.
26. Gerson & Sachse German Pat. 167,275, translation (Defts.' Ex. 5).
27. Kantorowicz German Patent 88,468, translation (Defts.' Ex. T).
28. Bredt German Patent 156,148, translation (Defts.' Ex. U).
29. Haake German Patent 164,385, translation (Defts.' Ex. V).
30. Bellmas German Patent 110,957, translation (Defts.' Ex. W).
31. Bellmas German Patent 118,089, translation (Defts.' Ex. X).
32. Witt German Patent 88,447, translation (Defts.' Ex. Y).

33. Brueder German Patent 114,978, translation (Defts.' Ex. Z).

34. Pages from periodical "Glue" (Defts.' Ex. A-A).

35. Perkins U. S. Pat. 1,109,144 (Pltf's. Ex. 23).

36. Perkins U. S. Pat. 1,238,810 (Pltf's. Ex. 24).

37. Brooks U. S. Pat. 779,583 (Defts.' Exhibit).

38. Herzberg British Pat. 12,326 of 1897 (Defts.' Exhibit).

39. Dornemann French Pat. 232,781 (Solva translation) (Deft's. Exhibit).

40. Calico Printers French Pat. 366,903, translation (Deft's. Exhibit).

41. Opinion of the Court, filed July 6, 1921.

42. Interlocutory Decree entered Aug. 5, 1921.

43. Defendants' Petition and Order Allowing Appeal Aug. 31, 1921.

44. Defendants' Assignment of Errors Aug. 31, 1921.

[fol. 606] 45. Solva Case decisions, etc.:

(a) Petition for rehearing in Solva Case.

(b) Appellees' reply thereto in Solva Case.

(c) Petition for rehearing denied in Solva Case.

(d) Mandate in Solva Case.

(e) Memo for final decree in Solva Case.

(f) Final decree in Solva Case.

(g) Injunction in Solva Case.

46. Reopening Order of July 26, 1923.

47. Stipulation of August 22, 1923.

48. Exhibits accompanying same as follows:

(a) Translation of Gerard Belgian Patent.

(b) Dornemann French Pat. 232,781.

(c) Translation of Dornemann French Patent 232,781.

(d) Translation from German Handbook.

49. Accounting Proceedings:

(a) Master's order to defendants.

(b) Statement of testimony adduced before the Master.

(c) Exhibits offered before the Master:

(1) Deft's. first statement filed with Master.

(2) Pltf's. Ex. 1, of Sept. 22, 1921.

(3) Stipulation re introduction of testimony from Perkins v. Fred E. Hood et al. Case, with attached schedule.

(4) Pltf's. Ex. 3 of Jan. 10, 1921.

(5) Pltf's. Ex. 3 of Jan. 12, 1921.
(6) Pltf's. Ex. 1 of Jan. 19, 1921.
(7) Pltf's. Ex. 2 of Jan. 19, 1921.
(8) Pltf's. Ex. 1 of Jan. 11, 1921.
(9) Copies of U. S. Patents 1,078,691, 1,078,692, 1,200,488, 1,299,705, 1,299,809; Deft's. Exhibits 1, 2, 3, 4 and 5 of Nov. 10, 1921.
(d) Report of Master of Nov. 9, 1922.
(e) Defendant's Exceptions to Master's Report.
50. Final decree of Mar. 17, 1924.
51. Petition and Order allowing appeal.
52. Assignment of Errors.
53. Cost Bond on Appeal.
54. Citation.
55. This Præcipe—Stipulation.
56. Order Reviving Case of Sept. 4, 1924.

[fol. 607] Vol. II

57. Evidence Introduced from the Case of Perkins Glue Co. v. Solva Waterproof Glue Co. et al. (U. S. Dist. Court, Northern Dist. of Illinois, Eastern Div.) as found in Vol. II of the Printed Record on Defendant's Appeal in the Case of The West Michigan Furniture Co. et al., Appellants, vs. Perkins Glue Co. Appellee, No. 3544 in the U. S. C. C. A. Sixth Circuit.
58. File Wrapper contents of original Perkins Patent 1,020,655.
59. Stipulation as to correctness of transcript of record.
60. Certificate of Clerk.

Gorham Crosby, Counsel for Plaintiff. James A. Watson, Counsel for Defendants.

Dated Sept. 30, 1924.

So ordered and the clerk is directed to certify the record accordingly without any further approval thereof by the Court or Judge.

C. W. Sessions, U. S. Judge.

[fol. 608] In United States District Court

Order Reviving Cause

Whereas it has been represented to this Court that the Plaintiff, Perkins Glue Company, a corporation of Pennsylvania, did on or about the 1st day of August, 1924, sell, assign and transfer to Perkins Glue Company, a corporation organized and existing under and by virtue of the laws of the State of Delaware, its successors and assigns, the entire right, title and interest in and to the Reissued Letters Patent 13436 in suit, and the inventions covered thereby, including all rights and claims to damages and profits that have resulted by reason of any and all infringements of said Letters Patent, with all rights and claims now in litigation with respect thereto and also the right to sue and collect the same in its own name, whereby this suit became abated.

Now, Therefore, on motion and petition of said Perkins Glue Company, a Delaware Corporation, and after considering the attached consents of defendants and of the said Perkins Glue Company, a Pennsylvania Corporation, by their respective counsel, it is

Ordered, Adjudged and Decreed that this cause be and hereby is revived with said Perkins Glue Company, a Delaware Corporation, substituted as plaintiff herein for said Perkins Glue Company, a Pennsylvania Corporation, to the same extent and purpose as if it had been the original plaintiff herein, and that all orders, decrees and other proceedings heretofore had herein stand for or against the said Perkins Glue Company, a corporation of Delaware, and the defendants, respectively, in the same manner and to the same effect as they applied to the original plaintiff, said Perkins Glue Company, a corporation of Pennsylvania, and defendants, respectively, prior to said abatement.

C. W. Sessions, U. S. Judge.

Dated September 4, 1924.

[fol. 609] Appearance of counsel, filed October 4, 1924, omitted in printing.

Minute entry of argument and submission January 5, 1926, omitted in printing.

In United States Circuit Court of Appeals, Sixth Circuit

Appeal from the District Court of the United States for the Western District of Michigan

Decree—Filed March 18, 1927

This cause came on to be heard on the transcript of the record from the District Court of the United States for the Western District of Michigan, and was argued by counsel.

On Consideration Whereof, it is now here ordered adjudged and decreed by this Court that the decree of the said District Court in this cause be and the same is hereby reversed with costs and the cause remanded to the said District Court with directions to take further proceedings consistent with the opinion of this Court.

[fol. 609–] In United States Circuit Court of Appeals

Before Denison, Mack, and Moorman, Circuit Judges

Opinion—Filed April 2, 1927

Denison, C. J.:

This case relates to glue. Until recently the word implied an animal substance base. The Century Dictionary so defines it, and does not include any vegetable composition, save by a reference to gum arabic,—although the patent art shows an occasional use of "vegetable glue." Various adhesives had been made with a starch base, running from a sticky mass, through stages of dilution, to a highly fluid, slightly adhesive, sizing. In common understanding, glue, paste and mucilage were fairly distinct families. Glue was largely used in furniture and similar arts, and especially in veneering, in which relatively large sheets of wood were to be fastened together, commonly in several very thin layers. It was necessary that the bonding material should be spread, by hand, brush or machine roller, over large surfaces very quickly, thinly and evenly, and that, when set, the bond should be exceedingly strong. Hence its essential qualities must be a high degree of fluid-

ity for application, and extreme tenacity when set. Glue—animal glue—had these qualities, and to speak of animal glue, or to say "as good as animal glue", was to imply them.

Perkins was, beyond dispute, the first (disregarding now the purely paper references)—to make successful starch glue, suitable for veneering and similar uses. He described it as being "as good as animal glue" and it proved to be. It was rapidly and generally adopted by the furniture and veneering industry, was cheaper and more easily used than animal glue, and even more effective in the firm bonding of wood or fiber surfaces. In a practical and commercial way, Perkins was a pioneer, and his discovery was one of importance. As a supposed inventor, he is entitled to whatever credit and presumption the law infers from striking, and in a sense revolutionary, commercial success.

His basic material was starch, and it seems to be accepted all around that cassava starch has qualities which make it [fol. 609–2] the best for this purpose. This is made from the cassava root, which manufacturers, in the tropical countries where it grows, grind, dry, wash, bleach and otherwise treat to put it in the condition in which it comes upon the market here, and is commonly called by the rather vague name "raw cassava starch". In this form it may have varying degrees of viscosity,—a term expressing the inherent inter-molecular friction of the material, dependent upon its water-absorbing capacity and usually measured according to testing apparatus used after mixing with water. It was known (though very likely not to Perkins) that this inherent degree could be lessened by artificial treatment, called degeneration. By the use of acid and heat, in very limited amounts, Perkins lessened the capacity of the starch molecules for water absorption, but was careful not to carry the treatment far enough to change the starch into dextrine or to dissolve it,—which with the subsequent treatment, would have produced paste, mucilage or sizing. The subsequent treatment, also broadly well known, consisted in dissolving in water, with caustic soda or similar digestant, the cellulose of the starch molecules. Thus the primary starch and water mixture was converted into a new compound which had customarily been one of those weaker adhesives, and which by Perkins' treatment became glue. Because

the starch water-absorbing capacity had become relatively small, a small amount of water would make a fluid mixture, so that it could be properly applied, and yet the necessary tenacity would remain. Water enough otherwise necessary to give fluidity woud have produced a dilution with relatively poor tenacity, like the old pastes, and, when applied to wood, requiring a long drying, and leaving little bonding material permanently in the joint. Perkins' glue was quickly dried and was so adhesive that, on pulling apart, the wood itself frequently gave way while the glue held.

To get the monopoly contemplated by the patent law Perkins obtained a patent dated March 19, 1912, which was almost immediately reissued as Reissue No. 13436, dated July 2, 1912, upon "Glue and Method of Making the Same." It has 38 claims, divisible into groups,—one group covering the so-called glue base, the product [fol. 609-3] of the first described, or degenerating step; one group relating to the process of making this base,—the first step process; one group covering the process of dissolving the base,—the second step; another drawn upon the double or two step process; and still another group based upon the ultimate product, the glue itself. Three claims selected out of this ultimate-product group, are the only ones now in suit,—28, 30 and 31. They are as follows:

"28. A glue comprising cassava carbohydrate rendered semi-fluid by digestion and having substantially the properties of animal glue.

30. A wood and fiber glue formed of a starchy carbohydrate or its equivalent by union therewith of about 3 parts or less by weight of water and alkali metal hydroxid.

31. A wood and fiber glue containing amylaceous material as a base dissolved without acid in about three parts of water or less, and being viscous, semifluid and unjellified."

Of these the broadest is perhaps 28; but it appears that a glue, thus composed, will not have "substantially the properties of animal glue," unless containing only the critically small amount of water specified in claim 30. It also appears that an article which is a wood and fiber glue, as distinguished by the specification from other things, will be "viscouse, semi-fluid and unjellified," as specified in claim 31. However for the purposes of this case, claim 30 may be taken as the claim in suit, and the other two will

stand or fall with it. Neither as to validity or infringement is there vital difference.

If this claim is to be interpreted at its face value, infringement can not be,—indeed is not,—questioned. The defense primarily urged is that the specified process or processes, must be so far implied in the claim that defendant does not infringe. This is not the ordinary rule. From the Goodyear case, 9 Wall. 788, 796, to the Leeds & Catlin case, 213 U. S. 301, 318, it has been laid down that a new process and its product are separate inventions (and see our review in Dunn v. Toronto, 259 Fed. 258); and protection was given by separate patents or by differing claims in one patent, as the Patent Office rules of practice have from time to time provided. Normally, a new process [fol. 609-4] may result in several products in addition to that one which is new and which is patented. Normally, a new product may be made as well by some old process, or by some new method, other than the one patented. Those cases are exceptional where process and product are necessarily mutually inherent, and are inseparable, "like the two sides of a sheet of paper." Among applications of the general rule are General Co. v. Laco-Phillips Co.—C. C. A. 2—233 Fed. 96; Proctor v. Berlin—C. C. A. 2—256 Fed. 23; Maurer v. Dickerson—C. C. A. 3—113 Fed. 870; Baker v. Refractories Co.—C. C. A. 3—253 Fed. 741.

Where a new process brings a new product, that is, one never made before by any process, there may be difficulty in separating the mental conceptions of the two or in describing either except in the terms of the other. If that difficulty is insuperable, it perhaps demonstrates that there is only one invention; but theory and practice alike require that if there are two patents, or separate claims for the two inventions, there should be claim-identification by which each claim is expressed with substantial independence of the other. Claim 30 fairly meets the test. In the two phrases "formed of" and "by union" there is a suggestion of reference to method, but only a suggestion; the substantial reference is to the constituents which make up the finished product, and is without dependence on the method by which they are combined. The process might, and by the specification does, more or less involve temperature of the water, degree of slowness in adding the starch

base, strength and quantity of the alkali, violence and time of agitation, etc. Some of the process claims do incorporate such methods; some do not. For example,—claim 10 (not in suit) says: "The process of making glue which consists in dissolving cassava carbohydrate in caustic alkali until a glue is formed, as distinguished from mucilages, sizes and paste." This specifies no possibly new process except by reference to the resulting product, and hence it can not be distinguished from a product claim; but the result is, not to impeach the corresponding and properly formulated claim for the article produced, but to invalidate the process [fol. 609-5] claim, which reached for something it could not lawfully grasp.

Upon the whole, and upon the face of the patent, we see no reason to doubt that claim 30 is a valid product claim, properly expressed, covering what it identifies, and not limited by any forced importation of process. If so, it is immaterial that defendant may not use the process steps, either of them; and infringement is not to be doubted.

We understand defendant to contend at this point that although claim 30 is not limited to any specific starch base, we must, to save the claim, imply a limitation by starting with the product of the first step. We do not agree. We are analyzing a result into its elements. Not to save from anticipation, but to make operative and intelligible, there is an implied limitation to that base which, when combined as stated, will give the result stated. In other words, out of the variety of starchy carbohydrates we must select one suitable for this combination. In this there is no forbidden vagueness, for the specification teaches that starch is suitable when its water-absorbing capacity is not too high nor too low, but is in what we may call for convenience the medium range. It can not be said that Perkins put any absolute limits on this range. He was not obliged to do so, and he carefully refrained. He warned that the degeneration must not be carried to the point of disintegration, or of starch solution (line 45, p. 2); but he states no maximum or minimum limit, purposing rather that this water-absorbing power can be "regulated" (line 68, p. 3). So far from supposing that he must use his first step and carry it to a definite point was he that he said he could start the second step, though not as well, with "certain

grades of untreated cassava" (line 81, p. 3)[1]. He then gives a method of testing his proposed base to find whether it is sufficiently degenerated to suit him, the 9 to 1 boiling test (line 125, p. 3); but he introduces this by saying (line 121) "one way which has been found satisfactory for de- [fol. 609-6] termining, etc., is." As to the other test which he suggests, the 170 degree test, he says (line 74, p. 4): "Also in actual practice I have found that a good glue is produced by treating the base with the chemicals to reduce the water-absorbing power to a point where etc." It seems to be true that the "raw starch" which defendant uses as the base of the process by which it makes its glue is not within the limits of inherent viscosity indicated by either of these operations, although it clearly is within that medium range which is essential to the result. We think this not important in considering the construction of the patent on its face. To confine the base to these two suggested examples (they are examples, not tests) would be to rewrite the specification.

Coming to the next point in the discussion,—defendant says that it is buying an ordinary raw starch on the market, as it rightly may, and dissolving it into glue by an old process, as it rightly may, and thereby gets the product it is using in its veneering work. This is to say that claim 30 (construed as we do) is invalid for lack of invention. No one knows just why it is that no brand of cassava starch which Perkins could buy about 1908 could be used until after artificial degeneration, while defendant finds that some present regularly marketed raw starch makes a satisfactory base for the second step. It may be that changed methods of cultivation or manufacture have brought the viscosity down to the medium range; it may be that peculiarities of defendant's dissolving operation take the place of Perkins' preliminary treatment. In former litigation on this patent, it has been thought a controlling thing that nature, since Perkins' invention, had evolved a substitute for his artificially degenerated base, but we see no im-

[1] This was perhaps merely prophetic, because the record indicates that he had not found any raw starch which would perform properly for his second step; but he was at least guarding as well as he could against the possibility that there might be, or might later come into the market, some usable raw starch.

portance in the subject. The utmost effect of defendant's claim would be to make the situation the same as if the present base used by defendant, the Kane base, had been as freely for sale in 1910 as it is today; and this is practically the situation created by the now conceded fact that Perkins' base, product of his first step, was old at the time of Perkins' work. In former litigation it has been held that Gerson and Sachse, by their German patent, had disclosed substantially Perkins' first (degenerative) step [fol. 609-7] and his resulting glue base. Perkins acquiesced in this result, and disclaimed wholly those claims which covered the first step process or the glue base product. Hence the question must be: "Was there invention in taking this known starch base, which had the essential degree of viscosity, and making a real glue out of it, as Perkins for the first time did?" We see no sufficient reason for a negative answer. The art is full of instances where a starch base had been dissolved with an acid or alkali in a water mixture, but no one had ever made thereby a successful or useful wood or fiber glue; nor has any one since been able to make such a glue, using only the instructions found in the prior art. The results had been—with a little water—a pasty jelly, unworkable and useless as a glue, or,—with much more water,—a thin paste, mucilage or sizing, also useless as glue. Whether Perkins reasoned it out or stumbled on it, he was the first to discover that by taking a starch of then peculiar qualities he could dissolve it in less than three parts of water, and get a product both fluid enough and strong enough to be a practical and useful glue for all purposes requiring glue, not paste. This same Gerson and Sachse patent is the nearest thing along this line. They did not much detail how to use their glue base after it was made, but they said it might be dissolved in water, 5 to 100, with 2 per cent of caustic. All agree that this would give a sizing suitable for filling a fabric, but worthless for joining wood. It gives, at the best, a strength of 300 to 400 pounds to the inch, while an effective wood glue required 1,000; and both Perkins and defendant get 1,500 to to 2,000. In no accurate sense can this sizing be called the glue product of the Perkins patent. It is distinguished by the critically different quantity of water in the composi-

tion, and by the lack of the characteristics of a wood and fiber glue, respectively defined in the specifications.

It is said that those who had used a high viscosity starch base with a small amount of water had the right to use any known quality of starch, and that those (like Gerson and Sachse) who had used starch of a medium range in viscosity, with large quantities of water, had the right to use any amount of water, more or less. Of course they had. [fol. 609-8] Non sequitur that there was necessarily no invention in selecting and uniting the peculiar base of one and the peculiar water quantity of the other. Patents are commonly granted, and sustained, for just that type of selecting and uniting mechanical elements, when they bring a long-sought and strikingly useful result which gets wide acceptance and use. Much more should it be so with chemical reactions, often not fully foreseen.

If the right of a prior inventor to vary proportions, sizes and relations in his article as much as he pleases barred a patent to a subsequent worker who did make the variation which the first man had not done, many familiar decisions are wrong. In the Minerals Separation case, 242 U. S. 261, and 250 U. S. 336, the earlier inventors had used oil in varying quantities, and had the right to use less than one per cent. The patentees first observed that with less than one per cent they got a much better result. Eibel's predecessors (261 U. S. 45) had flowed the fluid paper pulp down a screened incline with an elevation of three inches. He raised the upper end nine inches, making the incline twelve instead of three, and thereby made as good paper at a faster rate. He did not merely observe that the steeper the hill the faster water would run down it; he saw that an existing trouble would be cured by a faster flow. So with Perkins. He did not merely observe that if he used less water than Gerson and Sachse he would get a thicker paste; he saw and developed the reason why he could use a very little water, and get something never before obtained,—a starch-base wood and fiber glue. His conception and development of the interactions of his selected starch base and the alkaline solvent with the water minimum, and his creation thereby of a new product, following years of commercial need for and unsuccessful effort to devise such a product, followed by the general adoption by the industry, seem to

us to meet and satisfy the universally accepted tests of invention.

We have so far proceeded on the assumption that Perkins was the first to make from starch a product properly called a wood and fiber glue, as distinguished from pastes, jellies and mucilages. Is this assumption justified by the [fol. 609–9] record? The alleged public use by Perkins for more than two years was carefully considered in the Solva case (infra), and was held ineffective because it was composed of a series of efforts which did not pass out of the experimental stage into fully developed invention until less than two years before November 1908. We see no occasion to reach any other result on that subject.

The Gerson & Sachse patent (German) has been mentioned. It produced only "a very thick mucilaginous liquid." It contemplated 20 parts of water to one of starch base. It was "very suitable for purposes of dressing," i. e., fabric sizing. Its use as a wood glue was not contemplated, nor was it possible except by departing from the suggestions of the patent. "Apparetine" (Gerard, British and Belgian patent) used a raw potato or other starch. Gerard did not disclose that it must be of the medium range, but it may have been. He used more than five parts of water to one of starch. He made "a new composition for sizing fabrics." Though he said that his article was "of considerable adhesive power only to be compared to that of (animal) glue", it would be worthless for general wood joining use. It very possibly did have among the threads of the fabric an adhesiveness comparable to that of some low grade or thin animal glue which alone could have been used for sizing purposes. More probably, his laudatory statement was as unintelligent as it was vague. His specification shows he was aiming directly away from Perkins' target. His product, known 25 years before Perkins', was never used as a wood glue. Defendant's expert, in (supposedly) reproducing the patent for the purposes of this case, used only 2½ parts of water (Perkins' claim of "less than three") instead of five, and frankly says that "the veneering industry would not tolerate as much water" as Gerard used.

Higgins (U. S. patent of 1897) made a "starch paste" (the familiar "library paste") "a soft or firm paste". He degenerated his starch and dissolved the cellulose (as far as he went) in one continuous process. A hasty reading of his patent indicates that he came much nearer to Perkins than any of the others did; yet the most that can be said [fol. 609–10] is that he almost anticipates, not quite. His preferred formula carries the degeneration nearly to the dextrinizing point, and produces a good paste for uniting papers. He thought,—and said,—that by varying his formula he could make an adhesive of any strength up to that of animal glue; but he was mistaken. The record indicates that, if Higgins used the Perkins proportion of starch and water (as he said he might), he should, in order to get a successful wood glue, have used much less heat than he specified or should otherwise have arrested degeneration (the action of the acid) at an earlier point; and that he did not know. True, he speaks of arresting the digestion (by which he means the action of the acid) at the "glutinous stage", when the adhesiveness is greatest; but he spoke vaguely; and when he thus "arrested the digestion" he did not conceive a further dissolution and "coming across"; he ran it at once into jars for storage. Perkins degenerated his starch with acid (or, by assumption, selected a starch of the same viscosity quality), and dissolved it, and particularly the cellulose, with alkali. Higgins used only acid for his degeneration and for his further mixing step, both of which he includes in the name "digestion"; he used his alkali only to neutralize the acid and stop the "digestion"; it would seem likely enough that his cellulose would be imperfectly dissolved and his product not be a successful glue.[2] Whatever the scientific reason, the fact is clear that the Higgins patent never was accepted as teaching the art how to make a wood glue; somewhere and somehow it fell short. Defendant's expert conducted a series of experiments making veneer glue joints with glues which he made

[2] Dr. Grosvenor says the partly dissolved portions of starch grains under the microscope look like broken stone or cement, "and the resulting adhesive can not be strong enough for a wood joint." * * * "The theoretical considerations" by which Higgins "pointed the way are perhaps correct theory, but the * * * practical possibilities were not conceived, and are far from the facts actually realized by carrying out Higgins' process. * * * Higgins says a number of enthusiastic things, but the facts are it (his paste) is an entirely different product, not useful for woodwork."

after various old patents (with variations which he thought permissible); he did not even try to use anything made according to Higgins. Plaintiff's expert tried every variation suggested by Higgins, and could get nothing better, in adhesiveness, than 500 or 600 pounds to the square inch,—[fol. 609–11] quite insufficient for the furniture and veneering art,—as we have recited re Gerson and Sachse. In short, Higgins does not respond to even the broad identification of claim 30, because his product is not, according to the lexicon of the specification, a "wood and fiber glue".

As to all the other alleged anticipations, it may be said that either from lack of efficient base, or from too much water, or too much degeneration, or lack of complete cellulose dissolution, or some similar reason, each one was practically useless as a wood and fiber glue, failed of doing any good to the wood-joining art, and to be effective needs modification along Perkins' lines. We have in the end a rather typical instance of the difference between success and failure. The situation, as we see it, is well stated in a quotation found in plaintiff's brief. "This new product is susceptible of identification irrespective of any reference to the process. If it has all the characteristics and capacities of the animal glue of the prior art, without containing any animal substance, and is novel, useful, and a result of the inventive faculties, it is patentable."

There remains the subject of the effect of the former litigation and of the disclaimer resulting therefrom. This litigation presents to our mind the most serious obstacle to plaintiff's case. It appears that one Kane, knowing of the success of the Perkins glue, became interested in its commercial aspect, and, associated with former employees of Perkins, familiar with the situation, he put upon the market, as a glue base to be used by manufacturers for making the glue in their factories, a starch which has been called the "Solva base." He and others organized the Solva Company for this purpose. Perkins brought an infringement suit in the Northern District of Illinois, claiming infringement, either direct or contributory, of claims out of each of the five groups. It appears that—to accept the defendant's argument—"the major portion" of defendant's output was raw cassava starch, just as is now the case (the present Kane base is used by the present defendant); that

some portions of their output had been degenerated either by a mixture with low grades of raw starch on the market, or by a preliminary treatment like Perkins' first step. The [fol. 609–12] case came on for final hearing before Judge A. L. Sanborn. (223 Fed. 792.) He sustained the patent and found infringement of one claim out of each of the five groups. He based his conclusion upon his adoption of the same general view of the facts and the law to which we have in the foregoing pages given our approval, as far as they relate to that part of the subject-matter which has continued to be and is here in controversy. His opinion indicated that the glue made from that Solva base which was only the raw starch, was within the valid claims of the patent. In the decree, no distinction was made as to the different kinds of Solva base involved in the case. Upon appeal by the defendant, the Seventh Circuit Court of Appeals rendered an elaborate opinion. (251 Fed. 64.) It is not too much to say, as Judge Sanborn did after the remand, that it was in some respects obscure; indeed, the uncertainties which have developed in trying to apply it in other cases have led to much difference of opinion. We can not attempt an elaborate analysis. It held that the claims to the first step of the process, and to the product resultant therefrom—the glue base—were anticipated by Gerson & Sachse, and hence that the glue base, as a product and as the foundation of the second step in Perkins' process, was an old and unpatentable product. It found that Perkins' glue had the novelty and merit claimed for it. It sustained the claims to the compound two-step process, and, to some extent at least, the claims to the ultimate product, and did not sustain the claims to the second-step process. No attention was paid to any distinctions in the different kinds of Solva base that were involved. Its treatment of the process claims to the second-step process is open to the interpretation—and we think it the right one—that the Court considered those claims broad enough to cover the specified treatment as applied to any starch base however high in viscosity, and employing water to any extent, and even though the product would not approximate Perkins glue; and hence thought them invalid. If that view is correct they were too broad. At the conclusion of its opinion the Court said that the decree below "sustaining the claims for

the glue base and product, and for the so-called second-step [fol. 609–13] as such, is reversed, and that part of it which upholds the claims of the patent for the final process and the resultant product is affirmed."

The only claim which has been sustained below—the "resultant product"—was the claim to the final glue, without reference to the processes involved; and it seems to us fairly clear that the Court used this phrase to refer to the resultant product of the second-step, meaning thereby the ultimate product claims, as distinguished from the intermediate product which was the "resultant product" of the first step, and was found to be old.

We do not find in the detailed discussion in the opinion any considerations which would compel, nor do we know of principles which would permit, a holding that the final product claims, as they read, extend only to glue which had been made by the employment of both steps of the compound process; and we think we should not attribute to the Court any intention to declare that limitation.

Upon rehearing application in that case the Court was by defendant urged to clarify its opinion so as to show that there would be no infringement unless both steps of the process were used. The petition for rehearing was denied without comment. The opinion came up for interpretation when Judge Sanborn settled the final decree upon the mandate. He decided that the claims for the ultimate product were infringed, again making no distinction between the different varieties of the Solva base. He held that the claims for the second process step were not valid, but, as they read, were the claims "for a second step as such", to which the Court of Appeals had referred as invalid. From this decree neither side appealed again, although Judge Sanborn suggested that a second appeal was rather necessary for interpretation.

Several references have been made to the fact that plaintiff did not appeal from the decision holding invalid the second-step process claims as they read, and for lack of such appeal inferences are drawn against the plaintiff as to the validity or scope of the final product claims. This is again a non-sequitur; but we see no basis for such inferences. The plaintiff had an infringement decree upon the product [fol. 609–14] claims. Its injunction could have been no

broader, nor its recovery of damages greater, if the process claims were also sustained. The decree sufficiently bound the defendant, and it would not bind strangers anyhow, no matter what form it took. Whether plaintiff should appeal as to these process claims was merely a matter of policy,—and of doubtful policy. As to the product claims, it could not appeal, because the decree was in its favor. It acquired no right of appeal because Judge Sanborn used some reasoning which might be applied to limit those claims in some later litigation with others.

As a result of this decree, plaintiff filed a disclaimer of all the claims for the glue base itself, and all those for the first process step. It further disclaimed from the second process step "any process of making glue excepting where this staerh or starchy product, or carbohydrate subjected to the process, is degenerated to the extent described [in the patent], whereby the process results in the good as animal glue described" in said patent. The fair intent of this disclaimer as to the second step claims was, we should think, to limit them to a process where the material with which the process step begins is the less than high viscosity indicated by the teachings of the patent to be necessary to produce the result at which the second process step was aimed. Such material might aptly have been called "degenerate." We see no fatal magic in the use of the participle instead of the adjective. Certainly—as we think—in view of the fact that it was now being conceded that there was no novelty in the first step of its product, this disclaimer can not be intended to confine the affected claims to a process based upon this abandoned first step product; this would be to build up patentable novelty upon a concession of no novelty. The reference was not to the base which had been degenerated in the manner specified in the patent,[3] but to one degenerated (or degenerate) to the extent so specified; and this must be interpreted in connection with the statement remaining in the specification, that the second step could be practiced, and the ultimate product obtained, by commencing the second step with raw, un-[fol. 609-15] treated cassava starch. Whether or not plaintiff was at the early date correct in this statement, it nevertheless demonstrates his theory of this patent; but, what-

[3] As was by error said in one of the later decisions.

ever the proper construction of this disclaimer, in our judgment it can not in law have the effect of destroying the distinction between the process and product claims, and make the latter invalid so far as they do not imply the former. The absence of any effect upon product claims resulting from a disclaimer which narrows method claims in the same patent clearly follows from their mutual independence; there is no reason why there should be any such effect. The inventor of a new product need not take any process patent at all; the fact that he asks and is content with a modest method claim can not make his product patent worse than if he were content to ask for no method protection whatever. The effect upon product patent of a process-claim narrowness which comes from original issue and that which is achieved by disclaimer must be identical. A patentably new article does not necessarily involve any patentable process; merely putting ingredients together is not such a process. If it turns out that the process claim, as issued, omits some step which may or may not be essential but which the patentee is willing to accept as a limitation, such acceptance by disclaimer seemingly can not modify the separate grant of monopoly on the thing made. Goodyear's vulcanized rubber was a new thing, patentable as such. If his accompanying method patent had been found to be so broad that it might cover old methods, its correction by reissue or disclaimer could hardly have limited the product patent,—the whole purpose of which was to get protection independent, as far as possible, of method limitation. For further comment on inter-relation of method and product, see our opinion in Bishop v. Fulton, filed March 7, 1927; to the effect that a disclaimer does not concede former invalidity, see Permutit Co. v. Wadhams—C. C. A. 6—13 Fed. (2) 454, 457; and that a specific disclaimer as to some claims does not affect the remaining claims, see Graham v. Earl—C. C. A. 9—92 Fed. 155, 158; United States Co. v. Hewitt Co.—C. C. A. 7—236 Fed. 739, 742; Robinson on Patents, Vol. 2, Section 650.

[fol. 609-16] Subsequent cases came on for hearing in Western Michigan by Judge Sessions, and in Northern New York before Judge Cooper. These cases were based upon the product claims now in suit, and were directed against the same Kane base made of raw cassava starch now in-

volved. The opinions of these judges are found in 279 Fed. 454, 457, and 458, and are in accordance with the views we have expressed, both as to the original merits, the interpretation of the Solva decision and the disclaimer. The next case was heard by Judge Geiger, in the Eastern District of Wisconsin. 280 Fed. 728. He took the view that the Court of Appeals in the Solva case intended to confine the claims for the ultimate product to one which had been produced by practicing both steps of the process successively, and, influenced apparently also by the thought that there could be no invention in using more or less water in some of the old processes which produced mucilage or paste, held that these product claims did not reach the use of the Kane base involved. A little later Judge Cooper's opinion was reviewed by the Second Circuit Court of Appeals. (287 Fed. 109.) That Court adopted generally the same view expressed by Judge Geiger, and reached the same result. Still later Judge Geiger's opinion was affirmed by the Seventh Circuit Court of Appeals (292 Fed. 596), although it should be noted that the personnel of that Court had entirely changed since the Solva decision, so that its interpretation of that decision was based only on the record. Thereupon Judge Sessions, in deference to these last two decisions, reconsidered his first decision in the present case, and as to the Kane base dismissed the bill.

With the greatest deference to the opinions of the Circuit Courts of Appeals of the Second and Seventh Circuits, we find ourselves unable to concur with them. Even if we could agree that their interpretation of the intent of the Court in the original Solva opinion was right, we would still think that we ought not to reach the same result as they do, because in that event we would feel constrained not to follow the Solva decision.

The decree below is reversed, and the cause remanded for further proceedings in accordance with this opinion.

[fol. 609-17] In United States Circuit Court of Appeals

Motion to Stay Mandate—Filed May 2, 1927

On the proceedings heretofore had herein and on the Petition for leave to file a Bill of Review filed concurrently

with this Motion, defendant-appellee, Holland Furniture Company, by its counsel, moves this Honorable Court for a stay of mandate pending the determination of the Petition for leave to file a Bill of Review.

Holland Furniture Company, by William H. Davis, Counsel.

Dated April 29, 1927.

IN UNITED STATES CIRCUIT COURT OF APPEALS

PETITION FOR LEAVE TO FILE BILL OF REVIEW—Filed May 2, 1927

Holland Furniture Company, the defendant herein, and Kane Manufacturing Company, a corporation of Illinois, having a regular and established place of business in Chicago, County of Cook, State of Illinois, bring this their petition for leave to file a Bill of Review, and respectfully show unto this Court:

First. That, as appears from the records before this Court in this case, after trial and hearing and due proceedings had, a final decree was entered on August 5, 1921, holding Reissue Letters Patent No. 13,436 valid and infringed by your petitioner, Holland Furniture Company, and dismissing the bill of complaint as to the individual defendants, J. A. Vanderveen, Jacob Vanderveen, Dirk Vanderveen and Everett P. Stephan, and ordering an accounting of profits and damages by your petitioner, Holland Furniture Company.

Thereafter and prior to the entry of the final decree, namely on July 26, 1923, the case was reopened on defendant's petition for rehearing and on motion to reopen for the purpose of introducing certain prior art patents [fol. 609-18] and publications and translations thereof. New evidence was thereupon submitted, and a final decree was entered on March 17, 1924, holding that your petitioner, Holland Furniture Company, had not infringed upon the exclusive rights of the plaintiff under Reissue Letters Patent No. 13,436, by employing processes and making and using products wherein the starch base used was

furnished by your petitioner, Kane Manufacturing Company, and known as the "Kane base."

An appeal having been allowed from said decree on September 9, 1924, and due proceedings having been had, this Court handed down its opinion reversing said District Court, which opinion was filed on April 2, 1927.

Second. Your petitioners further represent that your petitioner, Kane Manufacturing Company, sold to your petitioner, Holland Furniture Company, the starch base known as the "Kane base" in this litigation, and guaranteed and agreed to defend any action brought against your petitioner, Holland Furniture Company, for infringement of the said Perkins Reissue Letters Patent No. 13,436, by reason of the Holland Furniture Company's use of the said Kane base, and agreed to hold the Holland Furniture Company harmless. Upon the filing of the bill of complaint in this case, your petitioner, Holland Furniture Company, called upon your petitioner, Kane Manufacturing Company, to defend the suit and to make good its agreement to hold the Holland Furniture Company harmless. Thereupon your petitioner, Kane Manufacturing Company, actively and openly defended this suit brought against your petitioner, Holland Furniture Company, appearing in said suit by its engineers, experts, attorneys and officers, and conducting the entire defense and your petitioner, Holland Furniture Company, took no part in the defense of the action, had no control over, and did not appear in said suit.

Subsequent to the bringing of this suit, namely on June 14, 1921, the Perkins Glue Company filed a complaint against the Gould Manufacturing Company et al., and a complaint against the Wisconsin Chair Company et al., in the United States District Court for the Eastern District of Wisconsin, charging said defendants with infringement of Reissue Letters Patent No. 13,436, and praying for an [fol. 609-19] award of profits and damages arising out of said alleged infringement and that said defendants be enjoined against further infringement.

That the infringement thereby complained of was the use by the defendants of Kane base supplied by the Kane Manufacturing Company.

That answers having been filed, and said actions were tried as one, and evidence having been presented by both

sides and the cause having been argued by counsel before Hon. F. A. Geiger, United States District Judge for the Eastern District of Wisconsin, and due consideration having been had, final decrees were entered in those cases on May 16, 1922, dismissing said bills of complaint for want of equity.

Following said decrees, namely on November 6, 1922, appeals were allowed in said cases by said District Court to the United States Circuit Court of Appeals for the Seventh Circuit and in due time said causes came on to be heard and after argument by counsel, said Court entered a decree affirming the District Court for the Eastern District of Wisconsin on June 18, 1923.

That on July 16, 1923, a petition for rehearing was filed in said actions by the plaintiff, and on October 1, 1923, said petition for rehearing was overruled.

That a petition to the Supreme Court of the United States for a Writ of Certiorari to review the decision of the Circuit Court of Appeals for the Seventh Circuit was denied on January 7, 1924.

That thereafter, namely on March 15, 1924, a mandate from said Circuit Court of Appeals for the Seventh Circuit to the United States District Court for the Eastern District of Wisconsin was filed in said District Court.

That the Kane Manufacturing Company actively and openly defended said action against the Gould Manufacturing Company and said action against the Wisconsin Chair Company. That said Kane Manufacturing Company appeared in said actions by its engineers, experts, attorneys and officers and conducted the entire defense. That the nominal defendants in those actions, namely the Gould Manufacturing Company and the Wisconsin Chair Company, took no part in the defense of the actions, had no control over, and did not appear in said actions. That the [fol. 609-20] Kane Manufacturing Company was under agreement to defend said actions and hold said defendants harmless.

That the respondent, Perkins Glue Company, the plaintiff in those actions, knows and at the time of the several said actions against the Holland Furniture Company, Gould Manufacturing Company and Wisconsin Chair Company, knew that the real party in interest as defendant was the

Kane Manufacturing Company, and not the nominal defendant.

Third. That, as it appears from the records before this Court, the Kane base supplied to your petitioner, Holland Furniture Company, by your petitioner, Kane Manufacturing Company, the use of which was alleged in this action to be infringement of the patent in suit, was the same as the Kane base supplied by the Kane Manufacturing Company to the defendants, Gould Manufacturing Company and Wisconsin Chair Company, in the two actions hereinafter referred to.

Fourth. And your petitioners further aver that at the time of presentation of the petition for rehearing and motion to reopen herein, viz. on July 26, 1923, the decision of the Court of Appeals for the Seventh Circuit in the Gould Manufacturing Company and Wisconsin Chair Company cases, dated June 18, 1923, was brought to the attention of the District Judge in this suit, whereupon the District Judge granted the motion to reopen, and lifted the injunction against your petitioner, Holland Furniture Company, so far as the Kane base was concerned, and expressed his intention to so modify the earlier decision in this case as to exclude therefrom the Kane base, and glue made therefrom. Thereafter by stipulation there was introduced into this case certain prior art patents and publications, and translations thereof, and expert testimony in regard thereto, and subsequently the form of the final decree to be entered herein was agreed upon between counsel and submitted to the District Court, and the said final decree was entered on March 17, 1924.

Fifth. That evidence of the final decrees in the cases in the Seventh Circuit has not been offered in this case, and [fol. 609-21] evidence of the substantial and material facts recited in paragraph Second herein have not been offered in this case.

And your petitioners further represent that the reason why the decree of the District Court for the Eastern District of Wisconsin, dated May 16, 1922, was not offered in evidence in this case was that the interlocutory decree in this case was entered prior to the decree in said case in

the Eastern District of Wisconsin and that an appeal was taken from said decree in the Eastern District of Wisconsin to the Circuit Court of Appeals for the Seventh Circuit; that after the decision of the Circuit Court of Appeals for the Second Circuit, and while the petition for rehearing was still pending in said Court, proceedings were taken before the District Court in this case, as recited in paragraph Fourth above, resulting in a final decree in defendant's favor; that immediately after the mandate of the Circuit Court of Appeals for the Seventh Circuit was filed in the District Court for the Eastern District of Wisconsin, namely on March 17, 1924, the final decree was entered in this case denying the plaintiff recovery by reason of the use of Kane base furnished by your petitioner, Kane Manufacturing Company, without evidence of the final decree in the case in the Eastern District of Wisconsin; that thereafter there was no necessity for presenting the foregoing facts in this case until after the reversal by this Honorable Court of the said final decree of the District Court.

Seventh. And your petitioners are further informed and believe and therefore aver that the final decree in the cases brought by the Perkins Glue Company against the Wisconsin Chair Company and the Gould Manufacturing Company have finally established, as against the Perkins Glue Company and in favor of the Kane Manufacturing Company, the right of the Kane Manufacturing Company to sell the said Kane base to its customers, and to instruct its customers how to use that base for the manufacture of glue, and that the said decree estops the Perkins Glue Company to interfere in any way with the use of the Kane base by customers of the Kane Manufacturing Company, and that such a decree makes the question of infringement of Reissue Letters [fol. 609-22] Patent No. 13,436 by the use of the Kane base sold by and purchased from the said Kane Manufacturing Company res judicata, so that it is the duty of the Perkins Glue Company to refrain from any and all interference with the customers of the Kane Manufacturing Company with respect to the use of the said Kane base, and that if these facts are introduced in evidence before the United States District Court for the Western District of Michigan, Southern Division, it would result in a decree holding

that there is no libility to the Perkins Glue Company for the use of Kane base purchased from the Kane Manufacturing Company.

And your petitioners therefore pray:

1. That an order may be granted by this Honorable Court requiring respondent, Perkins Glue Company, to show cause why the relief herein prayed for by your petitioners should not be granted;

2. For leave to apply for leave to file a bill of review in the United States District Court for the Western District of Michigan, Southern Division, against the Perkins Glue Company, setting up the aforesaid evidence in order that justice may be done in the premises;

3. That the mandate of this Court provide that, pending the determination of said bill of review, the alleged infringement based upon the use of Kane base purchased from the Kane Manufacturing Company be exempted from the operation of said mandate;

4. That the issuance of the mandate herein may be stayed pending the determination of this petition;

5. And for such other and further relief as to this Court may seem just and equitable in the premises.

Holland Furniture Company, Kane Manufacturing Company, Petitioners, by William H. Davis, Counsel.

[fol. 609-23] *Duly sworn to by T. B. Kane. Jurat omitted in printing.*

[fol. 609-24-26] IN UNITED STATES CIRCUIT COURT OF APPEALS

ORDER TO SHOW CAUSE AND STAY MANDATE—Filed May 9, 1927

On the proceedings had herein and on the Petition for leave to file a Bill of Review filed herein by the Holland Furniture Company and the Kane Manufacturing Company, copy of which Petition is annexed hereto, you, Perkins Glue Company, are hereby

Ordered to show cause, if any there be, at a session of this Court to be held at the Federal Building, Cincinnati, Ohio, on June 7, at 10:30 in the forenoon, or as soon thereafter as counsel may be heard, why the relief prayed for in said Petition should not be granted.

It is further ordered that any matter to be relied on in opposition to said Petition be filed and served on counsel for petitioners prior to June 1.

It is further ordered that this Order be served on counsel for the Perkins Glue Company on or before May 15.

It is further ordered that the Mandate in this cause be stayed pending the determination of the Petition.

Clerk's certificate to foregoing omitted in printing.

[fol. 609-27] In United States District Court, Western District of Michigan, Southern Division

In Equity. No. 1898

Perkins Glue Company, Plaintiff,

v.

Fred E. Hood, George A. Wright, and John R. Beckwith, Doing Business under the Firm Name of Hood & Wright, Defendants

In Equity. No. 1899

Perkins Glue Company, Plaintiff,

v.

West Michigan Furniture Co. and George P. Hummer, Defendants

Evidence introduced herein from the Case of Perkins Glue Company vs. Solva Waterproof Glue Company et al., tried in the United States District Court for the Northern District of Illinois, Eastern Division

[fol. 610] UNITED STATES DISTRICT COURT, NORTHERN DISTRICT OF ILLINOIS, EASTERN DIVISION

In Equity. No. 127

PERKINS GLUE COMPANY, Complainant,

vs.

SOLVA WATERPROOF GLUE CO. et al., Defendants

INTERROGATORIES TO PLAINTIFF AND ANSWERS THEREOF BY J. B. B. STRYKER ON BEHALF OF PLAINTIFF, MAY 2, 1914

(1) How long have you held the office of vice-president of the complainant corporation?

Ans. Since January, 1911. The company was incorporated about November, 1910.

(2) What connection, if any, did you have with the complainant corporation prior to becoming vice-president thereof?

Ans. None. See answer to interrogatory No. 1.

(3) What has been the business of the complainant corporation during the time you have been an officer of or connected with it?

Ans. Making and selling vegetable glue.

(4) Have you actively participated in the management and carrying on of the business of the complainant corporation since you have been an officer of or connected with it?

Ans. Yes.

(5) Have you been familiar with the business of the complainant corporation since you have been an officer of or connected with it?

Ans. Yes, in a general way.

(6) What connection, if any, did you have, and what official position, if any, did you hold in the corporation Planters Manufacturing Company, which is named in the bill of complaint in this cause as the predecessor in business of the complainant corporation, Perkins Glue Company?

Ans. Was secretary and treasurer; from 1903 was also manager of factory; before 1903, in a subsidiary position.

[fol. 611] (7) Between what dates and during what period were you connected with the Planters Manufacturing Company in the manner stated in your answer to the immediately preceding interrogatory?

Ans. Was secretary and treasurer from about 1905 till the Perkins Glue Company was formed, and manager of the factory from about 1903 until Perkins Glue Company was formed.

(8) What was the business of the Planters Manufacturing Company during the period of your connection with it, and at what place of business located during said period?

Ans. Manufacturing and selling products from the cassava plant at Lake Mary, Florida; West Newton, Massachusetts; New York City, New York; and South Bend, Indiana.

(9) Did you actively participate in the management and carrying on of the business of the Planters Manufacturing Company during the period of your connection with it, and were you familiar with its business during said period?

Ans. I actively participated in the management of the factory from the time I became manager of it, and from that time I was generally familiar with the business of the Planters Manufacturing Company. Also before 1903 I was somewhat familiar with the business.

(10) Were you acquainted, during his lifetime, with Frank G. Perkins, the patentee of the letters patent in suit in this cause?

Ans. Yes.

(11) When did Mr. Perkins die, and for how long a period, prior to his death, had you been acquainted with him?

Ans. He died September, 1910. I was acquainted with him for about eighteen years prior to his death.

(12) What connection, if any, did Mr. Perkins have with the complainant corporation, and with its predecessor in business, Planters Manufacturing Company, during his lifetime?

Ans. Mr. Perkins was president of the Planters Manufacturing Company, and later conducted the business as agent. Mr. Perkins died before the incorporation of the Perkins Glue Company was completed.

(13) When, if ever, did Mr. Perkins first disclose to you the inventions covered by the letters patent in suit in this cause, or either of them?

Ans. As the question is not confined to any particular formula, and as I do not know what various formulas and [fol. 612] products the court will construe as coming within the claims, of the patents in suit or the inventions thereof, I cannot answer the question.

(14) If said inventions were disclosed to you by Mr. Perkins at different dates, which invention was first disclosed to you, and when was the other one disclosed to you?

Ans. For the reasons given in the answer to interrogatory No. 13, I cannot answer.

(15) When and where, if at any time and place, and by whom, did you first see the inventions covered by the letters patent in suit in this cause, or either of them, demonstrated or put into practice?

Ans. For the reasons given in the answer to interrogatory No. 13, I cannot answer.

(16) Which of said inventions did you first see so demonstrated and put in practice, and when, where and by whom, did you first see the other of said inventions demonstrated and put into practice?

Ans. For the reasons given in the answer to interrogatory No. 13, I cannot answer.

(17) How frequently, and when, where and by whom, did you see said inventions, and each of them, put into practice subsequently to the dates given in your answers to the two immediately preceding interrogatories?

Ans. For the reasons given in the answer to interrogatory No. 13, I cannot answer.

(18) What are the names and present places of residence, so far as known to you, of each and all of the persons who were familiar with, or had any opportunity to become familiar with, the inventions covered by the two letters patent in suit in this cause at the dates and during the periods covered by your answers to the three immediately preceding interrogatories?

Ans. For the reasons given in the answer to interrogatory No. 13, I cannot answer.

(19) What was your connection, officially or otherwise, with the Planters Manufacturing Company during the year 1905?

Ans. Manager of the factory at Lake Mary, Florida.

(20) Did you actively participate in the management and carrying on of the business of the Planters Manufacturing Company, and were you familiar with its business, during the year 1905?

Ans. I actively participated in the management or running of the factory, and to that extent in the carrying on of the business, and was familiar in a general way with the [fol. 613] business of the Planters Manufacturing Company.

(21) What were the products of the Planters Manufacturing Company during the year 1905?

Ans. Starch, sizing for cotton goods, sizing for carpet cops, paper box adhesives, gloy for sizing or weighting cordage and yarns, and vegetable glue.

(22) What was the product or material shipped by the Planters Manufacturing Company during the year 1905 to Lowell M. Palmer, at Poplar Bluff, Missouri, and invoiced as "Perkins' Veneer Glue"?

Ans. This was a series of many different bases made from cassava, for making vegetable glue. During 1905, 1906 and 1907 Mr. Perkins was making so many changes in his formulas for making the bases and in his formulas for dissolving the bases to form glue, and shipping so many different products in an endeavor to perfect the glue, that I cannot answer the question more definitely.

(23) What was the product or material shipped by the Planters Manufacturing Company during the year 1905 to Lowell M. Palmer, at Poplar Bluff, Missouri, in bags marked "L"?

Ans. I think this was a number of different bases made from cassava for making vegetable glue, which had a lower viscosity than the bases marked "H." For the reasons given in the last answer, I cannot answer more definitely.

(24) What was the product or material shipped by the Planters Manufacturing Company during the year 1905 to Lowell M. Palmer at Poplar Bluffs, Missouri, in bags marked "H"?

Ans. I think this was a number of different bases made from cassava for making vegetable glue, which had a higher viscosity than the bases marked "L." For the reasons given in answer to interrogatory No. 22, I cannot answer more definitely.

(25) To what treatment, if any, were said products or materials referred to in interrogatories 21 to 24, inclusive, subjected to in the plant of the Planters Manufacturing Company?

Ans. Since no particular product or products are specified in the interrogatory, and since many of the treatments or processes used were secret processes and are still maintained secret, and since Mr. Perkins was making many changes in his formulas and using many different formulas for making the products in question, in an endeavor to perfect the same, I cannot answer.

[fol. 614] (26) Were any of the products or materials referred to in interrogatories Nos. 21 to 24, inclusive, subjected to a process of treatment in the plant of the Planters Manufacturing Company consisting in agitating a starchy carbohydrate with a digesting agent to decrease its water absorptive properties?

Ans. Sometimes they were, and sometimes they were not.

(27) Was the carbohydrate referred to in the immediately preceding question obtained from Cassava?

Ans. Some of them were obtained from cassava. I am not certain as to all.

(28) Did said process of treatment referred to in interrogatory No. 25 render the carbohydrate soluble in cold water?

Ans. Yes, to a certain extent, that is, in some, at least, of the various treatment- I found that more or less of the carbohydrate was rendered soluble in cold water, in some treatments more than in others.

(29) Did the digesting agent referred to in interrogatory No. 26 have an acid reaction?

Ans. In some of the various processes the digesting agent had an acid reaction.

(30) Did the process referred to in interrogatory No. 25 consist in agitating cassava carbohydrate with water and a starch converting agent, whereby the polymerization of the carbohydrate was altered to a point such that when dissolved it would form a viscous semi-fluid unjellified product adapted to be applied by machinery?

Ans. Since I do not understand enough chemistry to clearly understand the meaning of polymerization in the question, and because of the reasons mentioned in answer to interrogatory No. 25, I am unable to answer.

(31) Did the process referred to in interrogatory No. 25 consist in taking suitable carbohydrate material and properly proportioning the viscosity, cohesiveness and adhesiveness of the carbohydrate material, resulting when it is dissolved to form glue applicable by machinery?

Ans. For the reasons given in answer to interrogatory No. 25, I cannot answer.

(32) Did the process referred to in interrogatory No. 25 consist in agitating a starchy carbohydrate with water and suitable chemicals below the bursting temperature of the starch to proportion the viscosity, adhesiveness and cohesiveness, resulting when the base is dissolved to form glue applicable by machinery?

[fol. 615] Ans. For the reasons given in answer to interrogatory No. 25, I cannot answer.

(33) Did the process referred to in interrogatory No. 26 consist in treating cassava flour with substantially an equal weight of water, heating the same to about 130° Fahrenheit and adding about 2 per cent or 3 per cent by weight of strong acid slowly and with agitation, without rendering the flour material soluble in water, then neutralizing the acid with an alkali after from four to six hours' agitation?

Ans. As far as I know, none of the processes carried out in 1905 would meet the specifications of the interrogatory.

(34) Where the materials or products, referred to in interrogatories Nos. 21 to 24, inclusive, or any of them, characterized by the fact that they were prepared from starchy material and retained substantially unchanged in size and general form of particle when treated with cold water and produced opalescent, cloudy solutions with water at 200° Fahrenheit?

Ans. I do not know.

(35) Were the materials or products referred to in interrogatories Nos. 21 to 24, inclusive, or any of them, composed of suitable carbohydrate, which, when mixed with about three parts or less by weight of water and a solvent of cellulose would form a semi-fluid mass having substantially the adhesive properties of animal glue?

Ans. I believe none of the processes carried out in 1905 would meet the specification of the interrogatory.

(36) Did the materials or products referred to in interrogatories Nos. 21 to 24, inclusive, or any of them, consist

in a base for making glue as distinguished from mucilages, sizes and pastes embracing treated amylaceous grains substantially insoluble in water and an outer so-called amylocellulose coating, of which, in soluble grains, was partially, but not entirely, converted?

Ans. I do not understand the question, and consequently can give no answer.

(37) Did the process referred to in interrogatory 25, consist in agitating cassava carbohydrate with water, sodium peroxid, and caustic soda, whereby the polymerization of the carbohydrate is altered?

Ans. For the reasons given in answer to interrogatory No. 30, I am not at present able to answer.

(38) Did the process referred to in interrogatory 25, consist in treating a starchy carbohydrate or its equivalent, with water and an alkaline digesting agent until the water absorptive properties of the carbohydrate are decreased [fol. 616] and the viscosity, adhesiveness and cohesiveness resulting when the material is dissolved to form glue are properly proportioned for application of the glue by machinery?

Ans. For the reasons given in answer to interrogatory No. 25, I am not able to answer.

(39) Did the process referred to in interrogatory 25, consist in treating cassava starch with water, then adding peroxid of soda in the form of a solution, and also simultaneously treating it with a solution of caustic and agitating the same?

Ans. For the reasons given in answer to interrogatory No. 25, I am not able to answer.

(40) Did the process referred to in interrogatory 25 consist in treating cassava carbohydrate with water containing from ¼ per cent to 1 per cent by weight of peroxid of soda in the form of a solution of substantially twenty parts by weight of water to one part of peroxid of soda and also treating it with from ¼ per cent to ½ per cent of a caustic alkali in the form of a solution of substantially ten parts of water to one part of alkali by weight?

Ans. For the reasons given in answer to interrogatory No. 25, I am at present not able to answer.

(41) Did the process referred to in interrogatory 25 consist in treating a suitable carbohydrate with an alkali oxid-

izing material to properly proportion the viscosity, adhesiveness and cohesiveness, resulting when the carbohydrate is dissolved to form a glue?

Ans. For the reasons given in answer to interrogatory No. 25, I am at present unable to answer.

(42) What business association or connection, if any, did you have with Frank G. Perkins during the years 1906, 1907, 1908, 1909 and 1910?

Ans. I was manager of the Planters Manufacturing Company plant at Lake Mary, Florida, the business of which was being conducted by Mr. Perkins.

(43) What was the product or material shipped by the Planters Manufacturing Company, or by F. G. Perkins to R. M. Parker, Agent, at Poplar Bluff, Missouri, during the year 1907, and invoiced as "Veneer Glue"?

Ans. This was a vegetable glue base, made from cassava.

(44) How did it differ, if at all, from the product referred to in interrogatory No. 22?

Ans. Different raw materials were used, and different processes were used in preparing it, and the lat-er material was better when mixed, in that it was less lardy and short [fol. 617] and had better adhesion, and would work up into a smoother, better flowing glue, and would spread better.

(45) What was the product or material shipped by the Planters Manufacturing Company, or by F. G. Perkins, to R. M. Parker, Agent, at Poplar Bluff, Missouri, during the year 1907, and invoiced as "Light Body Veneer Glue"?

Ans. This was a vegetable glue base, made from cassava.

(46) How did the material or product referred to in the last interrogatory differ from that referred to interrogatory No. 23?

Ans. Different raw materials were used, and different process were used in preparing it, and the lat-er material was better when mixed, in that it was less lardy and short, and had better adhesion, and would work up into a smoother, better flowing glue, and would spread better.

(47) What was the product or material shipped by the Planters Manufacturing Company, or by F. G. Perkins, to R. M. Parker, Agent, at Poplar Bluff, Missouri during the year 1907, and invoiced at "Glue"?

Ans. This was a vegetable glue base, made from cassava.

(48) How did the product or material referred to in the last interrogatory differ from the product or material referred to in interrogatories Nos. 22, 23 and 24?

Ans. Different raw materials were used, and different processes were used in preparing it, and the lat-er material was better when mixed, in that it was less lardy and short, and had better adhesion, and would work up into a smoother, better flowing glue, and would spread better.

(49) What was the product or material shipped by the Planters Manufacturing Company, or by F. G. Perkins, to R. M. Parker, Agent, at Poplar Bluff, Missouri, during the year 1908, and invoiced as "Glue"?

Ans. This was a vegetable glue base, made from cassava.

(50) What was the product or material shipped by the Planters Manufacturing Company, or by F. G. Perkins to R. M. Parker, Agent, at Poplar Bluff, Missouri, during the year 1908, and invoiced as "Veneer Glue L. B."?

Ans. This was a vegetable glue base, made from cassava.

(51) What was the product or material shipped by the Planters Manufacturing Company, or by F. G. Perkins [fol. 618] to R. M. Parker, Agent, at Poplar Bluff, Missouri, during the year 1908, and invoiced as "Veneer Glue H. B."?

Ans. This was a vegetable glue base, made from cassava.

(52) How did the product or material referred to in interrogatory No. 50 differ from that referred to in interrogatory No. 23?

Ans. Different raw materials were used, and different processes were used in preparing it, and the lat-er material was better when mixed, in that it was less lardy and short, and had better adhesion, and would work up into a smoother, better flowing glue, and would spread better.

(53) How did the product or material referred to in interrogatory No. 51 differ from that referred to in interrogatory No. 24?

Ans. Different raw materials were used, and different processes were used in preparing it, and the latter material was better when mixed, in that it was less lardy and short, and had better adhesion, and would work up into a smoother, better flowing glue, and would spread better.

(54) What was the product or material shipped by the Planters Manufacturing Company, or by F. G. Perkins to

R. M. Parker, Agent, at Poplar Bluff, Missouri, during the year 1905, and invoiced as "Veneer Glue"?

Ans. Do not know of any shipment to R. M. Parker, Agent, in 1905.

(55) How did the product or material referred to in the last interrogatory differ from that referred to in interrogatories Nos. 22 and 43?

Ans. For the reasons given in the last answer, I cannot answer this interrogatory.

(56) What was the product or material shipped by the Planters Manufacturing Company, or by F. G. Perkins, to R. M. Parker, Agent, at Poplar Bluff, Missouri, during the year 1908, and invoiced as "Light Body Glue"?

Ans. This was a vegetable glue base, made from cassava.

(57) What was the product or material shipped by the Planters Manufacturing Company, or by F. G. Perkins to R. M. Parker, Agent, at Poplar Bluff, Missouri, during the year 1908, and invoiced as "Heavy Body Glue"?

Ans. This was a vegetable glue base, made from cassava.

[fol. 619] (58) What was the product or material shipped by the Planters Manufacturing Company, or by F. G. Perkins, to R. M. Parker, Agent, at Poplar Bluff, Missouri, during the year 1909, and invoiced as "Veneer Glue"?

Ans. This was a vegetable glue base, made from cassava.

(59) How did the product or material referred to in the last interrogatory differ from that referred to in interrogatories Nos. 22 and 43?

Ans. In respect of interrogatory No. 22, the differences, as far as I am now able to state them, were as given in my answer to interrogatory No. 44. In respect of interrogatory No. 43, different raw materials were used, and different processes were used in preparing it, but the differences as to shortness, adhesion, flowing and spreading qualities were not so great as between the glue shipped in 1905 and the glue shipped in 1907, as specified in answer to interrogatory No. 44.

(60) What was the product or material shipped by the Planters Manufacturing Company, or by F. G. Perkins to R. M. Parker, Agent, at Poplar Bluff, Missouri, during the year 1909, in bags marked "Light," and invoiced as "Glue"?

Ans. I do not know of any being shipped in bags marked "Light."

(61) What was the product or material shipped by the Planters Manufacturing Company, or by F. G. Perkins, to R. M. Parker, Agent, at Poplar Bluff, Missouri, during the year 1909, in bags marked "Heavy" and invoiced as "Glue"?

Ans. I do not know of any being shipped in bags marked "Heavy."

(62) What was the product or material shipped by the Planters Manufacturing Company, or by F. G. Perkins, to R. M. Parker, Agent, at Poplar Bluff, Missouri, during the year 1909, in bags marked "L," and invoiced as "Glue"?

Ans. This was a vegetable glue base, made from cassava.

(63) What was the product or material shipped by the Planters Manufacturing Company, or by F. G. Perkins to R. M. Parker, Agent, at Poplar Bluff, Missouri, during the year 1909, in bags marked "H," and invoiced as "Glue"?

Ans. This was a vegetable glue base, made from cassava.

(64) What was the product or material shipped by the Planters Manufacturing Company, or by F. G. Perkins, to [fol. 620] R. M. Parker, Agent, at Poplar Bluff, Missouri, during the years 1910, in bags marked "L," and invoiced as "Glue"?

Ans. This was a vegetable glue base, made from cassava.

(65) What was the product or material shipped by the Planters Manufacturing Company, or by F. G. Perkins, to R. M. Parker, Agent, at Poplar Bluff, Missouri, during the year 1910, in bags marked "H," and invoiced as "Glue"?

Ans. This was a vegetable glue base, made from cassava.

DEPOSITION OF FRANK BAKER, A WITNESS PRODUCED ON BEHALF OF DEFENDANTS, TAKEN MARCH 25, 1914

I am foreman of Brooklyn Cooperage Company, Poplar Bluff plant. Have been connected with them since 1899. I first met F. G. Perkins sometime in February 1905. He was brought into the mill by the superintendent, Mr. Nelson Windsor, and introduced as Mr. F. G. Perkins, who wanted to make some tests of his glue, to my recollection. We made

arrangements in the glue department for testing his glue, or mixing his glue. He went right ahead and made his test. It took him two or three days to make this test. At the time Mr. Perkins came we had nine double jacket steam kettles which were stationed upstairs and piped to the glue spreaders in the room below, which spreaders put the glue on the veneer sheets which were used for making veneer heading. Casein glue was being used at the time Mr. Perkins came, for the purpose of gluing together veneers for making barrel headings. We rigged up one of the nine steam jacket kettles which we had been using for mixing casein, for Mr. Perkins to do his mixing in. I furnished him a carpenter to help put in an agitater or wooden paddle to stir his glue and connect it up to the line shaft of the belt, and when he got that done Mr. Perkins started in to make his test. I could not say how he prepared his materials; I do not know. He made quite a few tests without my knowledge; that is, I will say quite a few mixtures without my knowledge. He would mix a batch till it would not flow through the pipe, and would dip it out of the small pot, carry it downstairs and pour it into the glue spreader pot, and he continued to do that to relieve that mixture, and then we continued to use the casein on the two spreaders and make this test on one, and as soon as we would get through with this test we [fol. 621] would continue to use casein until we got a new batch—probably next day. The glue spreader used for spreading the casein and which Mr. Perkins used to spread his glue consisted of two rollers, one above the other, about twelve inches in diameter, and I think about twenty-four inches long. The pot was underneath the bottom roller for the glue to be drawn in from. This glue pot was supplied by a pipe from one or another of the nine steam jacketed kettles above. If the glue was a very heavy mixture, would not flow through the pipe, so we had to dip it up and carry it down by hand and pour it into the spreader below. As to what difference there was, if any, in the way in which the roll acted when the glue pot of the spreader was filled with Perkins' mixture, as compared with the way in which it acted when the glue pot was filled with casein, it was altogether different. We had to readjust the machine. Had a pair of strings to hold the top roller up to keep it from being too close to the casein and taking the springs and put-

ting it on another way to hold part of the weight up with these springs so it would put enough of the casein on the machine, and changed the springs so it would have more pressure on the roller, so it would not put on too much of the Perkins glue. There was no other change made in the spreader that I remember of. If we put too much of Perkins' glue on it would wet the veneer sheet and it would not set. It would not stick. The Perkins would act differently with wet veneer sheets from what it would with dry veneer sheets. It would not stick at all with wet veneer sheets. If the stock is not dry there is not any glue that will stick to that wet stuff. It would not stick to green stock.

I could not state how long these early experiments of Mr. Perkins continued, exactly; there was some of the stock shipped away and some of it was not. It was all the first experiments that was put away in the storeroom to see what the result would be. I do not know how long it stayed there in the storeroom, but some of it was shipped out. Some of the glued heading was put in a car and shipped to Brooklyn. I think it must have been sometime in May or June before we had a carload of it; I could not say positively.

After these experiments with Mr. Perkins, they went to work and made long tanks, after they found out that they could not supply the small tanks enough to make a shipment they decided to put in the larger tanks and we give a contract to the Walker-Garretson Manufacturing Company to put in two large tanks so we could mix enough Perkins glue to make a day's run. We wanted to give it a test out [fol. 622] so we changed all of the glue spreaders at once and mixed the batch in the large tanks, and we—I am not sure about that. I think we used that for a day or two and then we dropped back on to casein again, of my recollection. We did not take out the old glue pots for some time. We kept those after, for quite a while. The two large wood tanks were never used for mixing casein glue. They were not suitable for it because casein was a hot mixture. The company is using the two large tanks today, but they have not been in continuous service for mixing glue since their installation, with the exception of such periods as the glue department may have been shut down. After the tank was installed my recollection is that we used them a while and then we dropped back on casein glue for a while.

The Perkins mixture was a very heavy mixture and would break the agitators in the tank. We had more or less trouble for that long, for quite a while. We overcome this trouble of having the agitators break by a new equipment with new gearing and new shafting and new agitators. After we changed the machinery so we could mix the glue, it was too heavy to flow through the pipes and Mr. Perkins suggested that we change the formula to more water. We had to adopt this suggestion. I disremember the dates when this change was made; sometime near the time when the tanks were installed. The effect of increasing the quantity of water in the mixture was, we found it had a very bad effect on the sticking qualities and also the setting qualities of the glue. I think by that time Mr. Perkins had ordered some different kind of glue from—I could not say where—and he told me at the time that he could cut out some of the water and make the glue flow with less water. And that was done about the time this experimenting was going on. I do not remember the dates. The changes were made from day to day. Always making changes in something to make the glue flow through the pipe. We had quite a trouble in changing from casein to Perkins' glue. Our former retainers would not supply the day's work without taking down some of the bales that were put up that day, and we found Perkins' glue would not set sufficiently to allow that. Or, rather, allow — to be taken down the day they were made. This retainer is the retainer that holds the glued stock together in bales until the glue sets. With casein, using a hot mixture, the glue would set quick enough for us to use the retainer again the same day. But during this experiment with the Perkins glue we found we could not take the bales down in less than twenty-four hours. I [fol. 623] disremember what change, if any, was next tried because Mr. Perkins was doing all that trying out himself.

It was finally decided that we would change all the spreaders, get new retainers enough to supply a day's work, and start in using Perkins' glue regularly. But I could not say about the dates when that change was made. I think Mr. Perkins was present at the time.

After I first met Mr. Perkins, about February, 1905, I think he was here in Poplar Bluff all the rest of the month of February and March, I think; I could not say positive,

but I think he was here the most of the time the following March and quite a lot of April.

As to the date of the decision in respect to using the Perkins glue regularly, to the best of my recollection it was sometime in the latter part of March, 1905. After arriving at this decision the change was made, retainers got and we started in to using Perkins' glue regularly, and continued it, I think, until they shut down in August, 1905. At the date of the shut down, I think there was some Perkins glue on hand I do not know how much. It was kept on hand until they resumed work later on and it was used up in the regular way; I think the first shipment of Perkins glue was received in small quantities. I disremember how long they continued to buy in small quantities. We finally got to buying in carload lots, but I disremember the dates. I disremember when we discontinued to use Perkins glue. As to what glue was used after this discontinuance of the Perkins glue, I think it was the same as we are using now, the Solva.

After we quit using casein glue; we had a carload on hand, and sometime along during the time we were using the Perkins glue regularly, we used up this carload of casein glue. I think they tried out another different kind, or silicate of soda, between the time we discontinued the Perkins glue and adopted the Solva glue. I could not place the date without I had something to refer to. The Perkins glue was used regularly for the gluing of wooden veneers for barrel headings, at least as long as a year, at this Poplar Bluff plant. I think it was used as long as two years, with the exception of shut downs of the glue room. It is my recollection it was used as late as 1908.

This Perkins glue came to the Poplar Bluff plant in powder form, dry powder form or flour, which was white. It looked very much like ordinary wheat flour, while some of it was more brownish. It was shipped in ordinary burlap bags, part of which were marked by numbers. All of the first shipments were marked by numbers and letters also. Part of them were marked "L" and part of them marked [fol. 624] "H." This signified light and heavy. A light body means thin; it was mixed thin with the same amount of water that was put in the heavy. In other words, if

ou mix it four parts of water and one part of glue, it ould mix very thin, and if you would take the heavy, the ne that was marked heavy, it would mix heavy with the ame proportion of water. The word "light" indicates hat the glue when mixed with a good deal amount of ater would be more fluid or liquid than a mixture result- ng from the glue marked heavy, mixed with the same mount of water. We could use both kinds in one mixture. We would find sometimes that too much heavy, with not enough light, would make the glue kind of sloppy like and would not set. We would find it would not set ready enough, and we would change the proportions the other way again, using more light and not so much heavy. I disremember exactly the proportions of light and heavy that we decided to use regularly. But we did decide on some proposition that we considered the best to use. Mr. Perkins made the first formulas to go by. We did not have more than one formula, but we made some little changes. The proportions of water and glue were about the same all the time, but the proportions of light and heavy bodied glue were changed from time to time, under Mr. Perkins' direction, while he was here. I never made any changes in the mixture of the glue without authority from Mr. Perkins or the office. As to the formula which was finally decided upon and was actually used in this Poplar Bluff plant, the proportions of water were four to one. The light and heavy bodied, I could not say. The records will show the pro- portion of the light and the heavy; I do not remember.

We continued to receive Perkins glue in bags that were marked light and heavy, I think, up until 1909 sometime, when they were changed to all in one bag marked "Per- kins"—I am not sure of this now—the bags came marked "Perkins Glue," with "Patent Applied For," or "Pat- ented," I am not sure which.

I supervised the mixing of Perkins glue at this Poplar Bluff plant. In doing this mixing the first thing is done is to draw so much cold water into the tank; if we were going to mix a thousand-pound batch of glue, of course, we would draw in four thousand pounds of water, pour in a thousand pounds of dry glue. We turn the steam into the tank and heat the water to 110 degrees Fahrenheit and stir the glue until it thoroughly dissolves. With a mix- ture of this size we dissolve seventy pounds of solvent into

a separate tank into two to one of water; we stir that until [fol. 625] it is dissolved. After this solvent is thoroughly dissolved it is poured into the large tank very slow until the glue is thoroughly dissolved; we stir that for about two hours and the glue is ready for use; that is, the solvent is mixed with water before it is poured into the tank containing Perkins glue, the proportion of the solvent to the water in which it is dissolved being about one-third or about two to one. We get it in just as small amount of water as possible so it will thoroughly dissolve. The proportion of water used in the tank to the glue that is added thereto is four pounds of water to one pound of glue and the proportion of the dry weight of the solvent to the dry weight of the Perkins glue is seven per cent. We have always used that per cent of solvent all through Perkins glue and the present mixtures, as far as I know. We have always followed the practice of mixing the dry Perkins glue and water first and then afterwards pouring into such mixture the dissolved solvent. The slower we put the solvent into the mixture of glue and water, the better it dissolves; if you pour it too fast it seems to clabber the glue, and I don't know that it does any particular harm, but it seems to stay on top and not go in. This solvent was in the nature of granulated form. I believe Mr. Perkins called it soda for a while. In the handling of it it was very severe; it would burn your hand; it was very strong. You had to be very careful — to touch your hands to it in the dry form and also in the liquid form; after it was dissolved in the glue the men handling the glued sheets would have to wear rubber gloves so that it would not burn *so* their hands. I learned that this solvent would burn a man's hands unless they wore rubber gloves, in the first batch we tried. When we used the first batch the men on the press did not know that it would burn their hands, so they used the entire amount of glue of the batch and did not discover it would burn their hands until the next morning, when they discovered their hands were so sore they could not work. I did not myself have any experience with this caustic action of this solvent. I did see the hands of these other men that had been handling the solvent. To protect the men in their work about the glue spreader, we bought rubber gloves for them. Rubber gloves had never been used about the plant for any purpose

before that I know of. The first I bought myself in the way of a finger stall. The next was bought by Mr. Perkins and from that time on I think the company bought the gloves. Lowell M. Palmer Company it was then. The men who handled the glued sheets used the gloves and they [fol. 626] continued to use them all the time, all that was working in the glue. That practice continues at the Poplar Bluff plant today.

All the time we used vegetable glue we used the same solvent, and we have been using vegetable glue from sometime in 1905 until the present time. The solvent has been bought from different companies. As far as quality is concerned, I could not tell any difference. The way of dissolving has been the same. The solvent bought from one company seems to operate the same way as the solvent bought from other companies. I could not see any difference either in appearance or action of the solvent that we used in 1905 from those of the solvents bought afterwards. I could not say what firms furnished solvent to the Poplar Bluff plant. One was a St. Louis concern and one was a Chicago concern, I understand. The first solvent was brought here by Mr. Perkins.

I do not know what material the Perkins glue was made from; only just by hearsay; Mr. Perkins told me at one time that it was made from a Cassava root, but he did not tell me how it was made or anything of the process of manufacture. As to conversation with Mr. Perkins with reference to the manner of using his glue after it was delivered to the plant, there was quite a lot of talk back and forth about the use of it. In the first experience there was something said in regard to the proportion of solvent to the dry glue. We tried as high as ten per cent. We tried hot mixtures and cold mixtures; tried the glue at ten per cent, hot mixture, and ten per cent cold mixture; tried it down as low as one per cent solvent. We found we could not do that in the wooden tanks, the heat was too great and would spoil the wood tanks. Mr. Perkins arrived at the seven per cent of solvent. I just followed Mr. Perkins' instructions. During the experiments I had instructions from the superintendent to do just what Mr. Perkins said. I knew at the time about these changes of proportion

of the solvent and took part in the experiments; done all the weighing myself. As to whether we ever had any need for the help of Mr. Perkins in using his glue after he discontinued his experiments and left the Poplar Bluff plant, I would say very often we would have trouble and he dropped down here to see what was the matter with it. It did not seem to be uniform; we would mix one carload and get in another carload. It would not be the same. As to when this difficulty arising from lack of uniformity ceased, after we began to get it in one bag we did not have any trouble with it. It seemed to be the light and heavy body [fol. 627] stuff; it seemed that when we would get a new shipment what was marked "L," it would not be the same that was marked "L" in the other car; the same way with the "H." The numbers would not be the same on the bags, kept getting me into trouble all the time. The trouble never was stopped until we got it all into one bag and it was proportioned at the factory instead of I would do it at the mill. That is about when the trouble ended, as far as the light and heavy body trouble was concerned. I do not know who was responsible for having the mixtures made at the mill. As to whether or not the proportions of the light and heavy bodied materials were specified in ordering the glue, it was up to the time it was all put in one bag. As to when was that time, when they began mixing it up at the factory, I do not know exactly the date. It seems to me it was along in the latter part of 1909.

While we were having our trouble in proportioning the light bodied and the heavy bodied glue, we did have to throw away some of the stock, the finished heading. When I would find that the glue was not running just right I would run the tanks together and use the glue from both tanks at once together. The glue business is a very funny business; you glue up the stock one day and take it down the next, and we can't tell what the results will be until you take it out of the retainers. Probably it will show up bad and spoil a carload of stock before you know it; that is the reason why we made this in small tests and until we were sure what we were doing. I do not wish to convey the impression that we wasted carloads of stock in a single day; I was trying to prevent the wasting of stock. A great deal of our trouble came from a lack of uniformity in the

materials furnished. We could find out by experiments the proper proportion to use of the given lot of the light bodied material and of the heavy bodied material, and thus get satisfactory results with that material. I do not think any of the Perkins glue that we handled at the Poplar Bluff plant was ever shipped back. A great many times we would have to order more with what we had on hand to make the proportions right. It seemed that one batch would be all right and give satisfaction, and maybe the next one would not.

As to whether I meant to say that we continued to use the glue that did not satisfactorily hold the veneer sheets together, I mean to say this: That I was instructed to use the glue and naturally I was doing the best I could with it. The way in which the glue was conveyed to the spreaders [fol. 628] and the way in which the spreaders applied the glue to the wood had something to do with the trouble. The light and heavy glues were never properly proportioned, that is where my trouble was; I was never able to get them properly proportioned. It was on account of the manufacturing end of the glue, the bags would be numbered probably the same but they would not be the same. I mean this: That in mixing a thousand pounds of glue we would put in five 200-pound bags; it is my recollection that we put in three of heavy and two of light. And maybe that would work all right for a while and then it would seem to change on me, and I got disgusted with it, and told Mr. Perkins to come down and try it himself. About that time there was some discussion about him putting it all in one bag at the factory, and it was taken up through the office and they talked it over. A heap of times we would never know anything about stock being glued bad until we would get a report from New York, where the stock was unloaded. That was taken up through the office, of course, here, and was taken up with me in the mill.

As to our present practice in respect of ordering vegetable glue, when the stock of glue runs low, I just notify the office to order another car of glue, nothing specified about the kind, only tell them we want just as good as we can get.

It has happened nowadays that the glue is too light or too heavy, and on such occasions I do like I did when

I was first experimenting with Perkins glus, I proportionate it. I never had that trouble but once, don't believe I had that trouble with but one carload, and that was quite recently. I am overcoming that trouble mixing it one bag to four ordinary stuff and the product is shipped out of the Brooklyn Cooperage Company.

Cross-examination:

As to the numbers which were marked on the bags shipped by Mr. Perkins, I do not believe I call them to mind; very many of them at least. It seems as though we had some marked 95. My recollection is 68, and quite a few other numbers, I do not remember. I am not sure we used those numbers at Poplar Bluff. I know there was some such numbers used in other places. I think we got quite a lot of glue marked 55 something. I do not remember 57. I have no positive recollection of 66. I know there was a lot of those numbers, but I am not sure of what they were. I knew at the time what they all meant, but I do not remember now what they were. I remember [fol. 629] 95 was a very heavy bodied glue; 71 was, as I recollect, a light bodied glue; 55-5 was a peculiar kind of glue; it will keep it from being so stringy. That is all I recollect of the numbers. A great deal was shipped in barrels and it had numbers on it, but I disremember what they were.

Regarding letter dated November 14, 1906, I wrote that letter to Mr. Perkins when I was in Cairo, Illinois. I went to Cairo to help Mr. Perkins try out his glue at the plant of the Singer Manufacturing Company in Cairo. At the time that I wrote that letter they were just getting ready to start using Mr. Perkins's glue at the Singer Plant in Cairo, just installed the iron kettles—tanks we call them—and was waiting on some part of the spreader which was broken in shipment, and was getting it repaired, I suppose. There had not been any test made at that time, as far as I know. Mr. Perkins employed me to go over to Cairo to help him out on this work.

(The letter of November 14, 1906, marked "Complainant's Exhibit No. 11, Baker's Letter.")

Regarding letter dated December 30, 1906, I wrote this letter to Mr. Perkins while I was in Cairo. In this letter I spoke of "desired changes in our formula and think it will be good." It seems that it was some changes in the proportions of the light and heavy body, the way the letter reads. That is all I have got to go by is the letter. It was a change in the formula for mixing Perkins glue. My recollection there, the 95 was very heavy and the 68 was the light. From the change in the formula mentioned in the letter, Mr. Perkins was still having trouble with his mixtures, and I and he continued to make changes in the proportions of light and heavy up to this time.

(Letter of December 30, 1906, marked "Complainant's Exhibit No. 12, Baker Letter.")

Regarding letter dated December 10, 1906, I wrote this letter to Mr. Perkins when I was in Cairo. At that time I was trying out the mixture mentioned in that letter. In the letter the different lot numbers or bag numbers which went to make up the mixtures were 95, 83 and 68, and there was another marked "Gum," and the numbers opposite these lot numbers, that is, 240, etc., indicate the relative number of pounds of each kind in the mixture.

[fol. 630] (Letter of December 10, 1906, marked "Complainant's Exhibit No. 13, Baker Letter.")

Regarding the letter dated January 11, 1907, I wrote this letter to Mr. Perkins. It seems they had made some mistake in the mixing also by getting it too hot.

(Letter of January 11, 1907, marked "Complainant's Exhibit No. 14, Baker Letter.")

Regarding the letter of February 14, 1907, I wrote this letter to Mr. Perkins. The new spreader refer-ed to in the letter was a new form of spreader. The letter states: "We put in a batch of the new formula and they are using it today." It seems as though from these letters that I have had instructions from Mr. Perkins to try out a new formula and I had done so.

(Letter of January 11, 1907, marked "Complainant's Exhibit No. 14, Baker Letter.")

Mr. Perkins was here in Poplar Bluff a great deal of the time, at least in February, March and April, 1905, and Mr. Perkins also came back to the plant in Poplar Bluff a number of times after that to try and clear up troubles we were having. I remember at one time Mr. Perkins tried to put in a solvent to prevent the acid eating the men's hands.

When I went to Cairo to help Mr. Perkins try out his glue in the Singer plant there we used a very different formula from that we used first at Poplar Bluff. After the first experiments with Perkins glue at Poplar Bluff there was a considerable amount of casein left on hand for the purpose, so if Perkins glue did not seem to be a success we could fall back on the casein. I remember very distinctly that the superintendent said he did not want his casein to run down lower than a carload, because it takes about thirty to sixty days to get another car.

In our work at the Singer plant in Cairo we finally got a much better joint than we did at Poplar Bluff. I do not remember whether Mr. Perkins had some solvent come in iron drums at one time. He had some water-proofing that came in barrels. As to his using various chemicals besides the so called soda in his work at Poplar Bluff, why, he came to the drug store very often and got some stuff, I do not know what it was, and put it in the glue; I do not know what the effect was nor what the desired effect was. For quite a while he had trouble with the time required for the glued up heading to set with Perkins glue at Poplar Bluff. I believe at the start there was some of the glue [fol. 631] shipped by Mr. Perkins to Poplar Bluff that was granular in form, but not very much of it. I remember that quite a while after Mr. Perkins started at Poplar Bluff that either the spreaders or the rolls on the spreaders were sent over to Mr. Perkins at South Bend to be built over or improved. The entire machine was sent.

Redirect examination:

As to the product that was being manufactured at the Singer Manufacturing Company plant at Cairo while I was there, this, to the best of my recollection, they called "Table Tops," used for sewing machines. My recollection is that they used five-ply of gum, about one-eighth of an inch thick,

to veneer with. Each veneer was about one-eighth of an inch thick. They finished that on each side with one-twentieth of an inch veneer, to the best of my recollection. It was very thin. These table tops were built up out of gum, five-ply, and belted up in retainers and let dry for at least two weeks, is my understanding. Then they would take them and re-glue them on the outside and lay on the thin veneer on each side, sometimes of oak, some walnut, some maple. This thickness of one-twentieth of an inch is very much thinner than the veneers used at the Poplar Bluff plant, where the thickness of the veneers was five-thirty-seconds of an inch. This difference in the thickness of veneers has significance in the operation. In the Poplar Bluff stock five-thirty-seconds of an inch would make the veneer stiff enough so it would not roll up around the roller of the spreader. The one-twentieth of an inch of veneer at the Cairo plant was very thin and delicate and would roll up around the roller of the spreader. Now, I am—I am not sure the thin veneer was put through the machine at Cairo. I know it was at South Bend. We did a lot of one-eighth gum sheets at Cairo that acted a good deal the same as the Poplar Bluff veneer.

The requirements of the finished product of the Cairo plant made it necessary to take precautions that were not necessary in manufacturing the products at the Poplar Bluff plant. In laying on the thin veneer on the table, to build up a table with Perkins glue, caustic would stain through where the per cent was too large; also required a much stronger joint. To meet these requirements at Cairo we only used one-half or one per cent of solvent where at Poplar Bluff we used seven per cent and reduced the amount of water at Cairo. I disremember what the amount was we used. When we reduced the amount of caustic at Cairo, to [fol. 632] offset the reduction of the caustic we made a hot mixture instead of a cold mixture. It was rather mixed by heat instead of solvent, that is, dissolved. One of the purposes of reducing the solvent was to prevent the stain that would show through this very thin veneer of the finished sewing machine table.

This experience at Cairo did not cause us to change our formula as used at Poplar Bluff.

Regarding the leaving of the unfinished tops at the Cairo plant in the retainers for at least two weeks before the fin-

ished veneer was applied, I did not intend to convey the impression that they were left in the retainers. It was taken out of the retainers and stacked up in stacks and dated. My recollection is that we put dates on the stacks to show when they were glued up. It was taken from these stacks and run through the sanders to put on a smooth finish before the outside veneer was put on; that is my recollection. I do not know why they were left in the house so long only to be thoroughly set before being put through the sander, as the sanders were a very severe test on the glue.

Referring to the use of a smaller proportion of water at Cairo than was used at Poplar Bluff, the reason for this difference was to make a stronger joint. A stronger joint is required for sewing machine table tops than is required for barrel headings. You get a stronger joint when you reduce the amount of water. When you reduce the amount of water it mixed very heavy. The less water the heavier the glue. It makes it very still-like and also stringy.

My experience at Cairo did not cause me to change the proportion of water to the glue as used at the Poplar Bluff plant. No change that I know of was made in the proportion of ingredients in the formula at the Poplar Bluff plant after my experience at Cairo.

After my experience at Cairo we continued at Poplar Bluff to use the same formula and practice the same process in a general way. Of course, as I said before, we would change the amount of light and heavy bodied, but not the amount of weight of glue. I think we used the same proportion of light and heavy in cold weather that we used in hot weather. It is my recollection, and it is so today, that in winter the glue runs heavier than it does in the summer. If we want to secure uniformity of the glue in winter and in summer, we would do it with heat, heating the water. The difference in heating the water would run all the way from one hundred in summer to one hundred and twenty in the winter time.

[fol. 633] As to changing our formula so as to use some light and less heavy, the result would be to get quicker set and less slobber of glue on the stock.

I identify letter of May 30, 1907, received by me from Mr. Perkins.

(Marked "Defendant's Exhibit 20, Letter of May 30, 1907.")

Recross-examination:

As to reducing the amount of water in the glue, if you reduce the water too much it would make it so you could not use it at all if you reduced it too much. We had some experiment batches of work that way. I do not remember how much water we used in these.

We used quite a different formula for mixing the glue at Cairo than we did at Poplar Bluff.

I remember of gluing up some small thin samples of walnut veneer as a test one time at Poplar Bluff before I went to Cairo. I do not remember what the result was.

Deposition of James R. Pearce, a Witness Produced on Behalf of Defendants March 26, 1914

I do trucking of veneering at the Poplar Bluff plant of the Brooklyn Cooperage Company. I have been employed at this plant since December, 1902.

I know a Mr. Perkins; we call him "Glue" Perkins. I first met him, well, it was in 1905, I guess, along in the early part of 1905, at the Brooklyn Cooperage plant. My understanding was that he was there to introduce a new glue. The first I knew of it, Mr. Baker told me that was his business; that he had the glue, samples of the glue, in some bottles. That is the first of the glue that I knew anything about. I went upstairs and seen the glue that was in the bottles. Well, they went to work and fixed up a pot that they had used for mixing casein glue in, and they mixed this glue in that pot and carried it downstairs and poured it in the glue machine, some with buckets and some down with tubs. There was one batch of that mixed, I won't be certain that it was every day, for some time. This glue machine consisted of a lower pot that the glue was poured into, and there was two rollers to the machine, one right above the other, the lower running through the glue, and the upper roller taking glue from the lower roller, that is, the machine. The veneer was fed to the machine by

hand by a man, pushed into the machine endwise between the rollers. The upper roller received its glue off the lower [fol. 634] roller. The glued veneers that were delivered by this gluing machine during the early portion of the time that Mr. Perkins was at this plant was taken from the machine, from the rollers, and placed in a press between the dry sheets of veneering. There was twenty—there was thirty-eight and sometimes thirty-nine sheets put into a bale; then it went into a hydraulic press and was bolted up and pushed out on a conveyer and set out in the room and was allowed to set twenty-four hours before taking down. After they was taken down they was taken to the turner and a barrel head burned out of them. There was three layers of veneers in one of these sheets. The barrel heads were bolted up and put into a bale and sometimes they were loaded into a car; sometimes they were stored into a storage shed.

During the time when Mr. Perkins was at the plant the veneer sheets were tested after they were glued, by tearing the sheets apart. The purpose of these tests, well, it seemed to be to find out whether it was going to stick or not. As to whether any test was made to determine the drying quality of the glue, well, I don't know about that part of it now, the drying part. All of the tested sheets were not of the same age. Each batch of mixture was tested, but I don't know how often. It was not every day.

As to keeping these veneer sheets different lengths of time before testing, well, they would let it only stand in the bale twenty-four hours and then take it down and test it; after these tests they went right ahead to using it. As to what extent they used Perkins glue, well, I couldn't say exactly how much they used, but I supposed it to be about fourteen hundred pounds a day, after they commenced to using it steady. As to how long they continued to use Perkins glue regularly, well, now, I couldn't tell you; that is the point that is hard for me to tell. They used it quite awhile regularly; then the mill was shut down about nine months, shut down and then when they started up again they still used the Perkins glue. There was some Perkins glue on hand during the period of the shut down. We used it up when the mill started up again. I do not know why it was shut down. My understanding was that

it was an overstock of heading, that is, barrel heads, glued heading. We continued to use Perkins glue when we resumed work after the shut down, for a while. As to what kind of glue we used after we ceased to use Perkins glue, I don't know; if I heard the name I have forgotten, if it had any name. As to when we began using the glue that is [fol. 635] now used at the Brooklyn Cooperage plant, well, I can't tell you exactly; seems as though it has been a year and a half ago; I wouldn't be positive about that. As to how long it was after we quit using Perkins glue that we began using the glue that we now use, I could not say for certain whether we went off of Perkins glue and right on to the glue we are using now. They had a fellow in there to introduce a glue they called silicate of soda.

As to the kind of wood used in making these veneer barrel heads, we used some black gum, mostly sweet gum. It made some difference as to the sticking power of the glue whether the wood was green or dry. If the wood was green the glue would not stick, and if the wood was dry, if it would stick at all, it would stick.

I remember something about wooden tanks being installed at this plant. I was there when they was building the tanks. I think Mr. Perkins was there at the time. As to the capacity of the tanks, I could not tell you; that was several thousand gallons, but I cannot say exactly. These tanks were used to mix the Perkins glue in. They was used from the time they were built up to the present time. As to the kind of tanks used for mixing the casein glue before Mr. Perkins came to the plant, they used an iron pot. We had nine of them. They are at the plant yet. These iron pots were steam jacketed kettles. They could still be used for mixing glue by refitting them again. That would require the steam pipe being fitted back to them; that would be a very simple matter.

I remember something about rubber gloves being used at the plant. When they first commenced the Perkins glue steady, the boys' fingers got sore that handled the glued sheets, and they didn't know what was making them sore, and Mr. Perkins said that the—I won't say that he did say it, I don't know that I heard him say it—Well, anyhow, Mr. Perkins got some kind of dope up town for the boys to use on their fingers to keep the soreness down, and

that didn't seem to do any good, so the rubber gloves were brought into use. The boys continued to use rubber gloves in handling these glued sheets all the time they were using the Perkins glue, and also using them yet on the present glue that they are using.

As to whether I ever had anything to do with unloading the shipment of glue and solvent, I never had any with the solvent; I helped unload several carloads of the glue. All that I helped unload was in sacks; it looked like flour. [fol. 636] From the time that we began to use the Perkins glue steadily, it continued to be the same glue, so far as I know.

Cross-examination:

I worked in and out of the glue room. While I was in the glue room my duty was to put the veneer up to the glue machine, also bolts in the rack for the retainers. I never had anything to do with the mixing of the glue, so that I would know nothing about as to how the glue was mixed; I do not know the form of it. I was working in the glue room during the first two years they were using Perkins glue. I do not know just how long they used it. I was working there all the time that they did use it.

The veneering was stacked outside of the glue room. I loaded the veneering and hauled it into the glue room, and then I set the truck that I had loaded up to the glue machine. That is what I meant by my duties in the glue room. I also fed the machine, the glue spreader, three or four weeks, while one of the men was sick. I could not tell you just when it was, but I am positive that it was while we were using Perkins glue.

As to my knowledge of any troubles they had with the spreading or sticking qualities of Perkins glue, I do not know about the sticking qualities so much; there seemed to be a right smart of trouble in the spreading of the glue while using the old machine. After they got the new machine, it spread a good deal better than the old machine. It was a right smart period after Mr. Perkins started before they got the new machine. I do not remember how long it was.

As to whether I know anything more about the troubles they had with the spreading or sticking qualities of Per-

kins glue, well I don't know; I don't know of anything. There might have been more troubles with Perkins glue that I would not have known about. I knew that the glue on the spreader looked differently, that is, had different shades or color at different times. I knew that it was thicker at some times than others. As to whether Mr. Perkins at various times sent different kinds of glue there, for instance, marked with different numbers or letters, I helped unload glue marked with different letters on the sacks. One sack would have II on it, the other would have the letter L. I never noticed any numbers on the sacks that I remember of.

I noticed sometimes while using Perkins glue that it would run stringy or short as it ran in the glue spreader.

[fol. 637] Redirect examination:

As to whether I noticed any variations in different shipments of the glue that we are now using, I would say in one shipment especially, the carload that we got before the last carload, the carload before the last car that we got, seemed to be an awful heavy glue, so heavy that we could not get it through the glue pipes lots of the time, without blowing it with steam. The last carloads seems to be the same glue that we first got of this new glue we are using.

As to whether down to the present time there continued to be variations in the different shipments, I would say there was only the one shipment that I could see any difference in; that was the next to the last carload.

There is a wide range of difference in respect of the kind and of the condition of the wood used in these veneer barrel heads from time to time. There would be several conditions of the wood. There is a difference in the wood. There is so much difference in timber and different kinds of timber and conditions of timber that I do not know what you are driving at.

As to whether I found the changes in the Perkins glue, from the time that we began to use it regularly, amounted to more than the differences in the wood we were using, I would say, well, I don't know that there was.

Recross-examination:

I remember that after several years that finally the Perkins glue all came in one kind of bags; that there was no

longer different bags marked L and H. I remember that after that Perkins glue ran more uniform; that is, after that we did not notice the changes in shade or color and thickness of the glue.

DEPOSITION OF JAMES G. GREENUP, A WITNESS PRODUCED ON BEHALF OF THE DEFENDANTS MARCH 26, 1914

My occupation is cooper at the Brooklyn Cooperage plant. Have been employed at the plant since 1899. As to whether I ever had anything to do with the glue department, it was first in 1901, in the glue, making heading. I knew of Mr. F. G. Perkins being at the Poplar Bluff plant. This was either in the latter part of 1904 or early in 1905. He was introducing his glue. He had glue brought here and mixed it out in the plant, and we used it; then the heading was tested for its sticking qualities from time [fol. 638] to time. This Perkins glue was mixed originally upstairs in iron tanks we had been using for mixing casein glue in. The Perkins glue that was mixed in these iron pots, the first mixture they rubbed on the sheets of veneer with their hands, and then put them in the press, between two other dry sheets of veneer and baled it in bales of casein glued headings. These hand glued veneers were kept in the press about a minute, retainers put on, bolted up, and took to the stacking room, and remained there twelve or fourteen hours; they then were tore apart by Mr. Perkins and Mr. Baker—I mean Mr. Frank Baker—for the purpose of testing their sticking qualities. As to further tests, well, from time to time they would make bigger batches of the glue and use it through the glue machines, spreading machines, and tested, as before stated. After these tests had been made, they decided that they could not use his glue to his satisfaction in those small iron pots; they then made arrangements for the wooden tanks and got two wooden tanks of large size from Mr. Walker. They continued to use these large wooden tanks for mixing the glue in as long as they used Perkins glue, about six or seven years.

The first Perkins glue might have come in barrels; I can't exactly remember. It was mixed with water and the glue and solvent. The glue came in powder form. After

that it came in sacks. Some sacks had the letter H on them. Some sacks had the letter L on them. I do not know what these letters signified. You could not tell the difference in the looks of it. There was difference after they were mixed in the water. The H glue was a thicker glue, a heavier glue when mixed, than the L glue. Sacks of H glue were mixed with the sacks of L glue in the tank at the same time. Water was first put in the tanks, then the glue, dry glue. Then the solvent in liquid shape. The solvent did not come to the plant in liquid form. It was white, similar to concentrated lye, only thicker, looks like lye looks after it has stood in the air for a length of time. Then it is dissolved in water and run into the glue.

It was the practice of the Perkins Glue Company to prepare the glue in the way I have described, all the time we used it. As far as I know, the solvent was run into the larger tank through a small iron pipe, about one-half inch. To the best of my knowledge, it would ordinarily take about one hour for the solvent to run into the large tank. During this hour stirring was continued in the tank.

[fol. 639] I remember about the rubber gloves used by the men in the glue room. We used rubber gloves. There was some ingredients in the glue that burned our hands. Mr. Perkins bought the gloves first, and we used them from that time to this.

Cross-examination:

As to whether all I know about the mixing and use of Perkins glue is what I just happened to see others doing as I might happen to go into the glue room, I would say that what I know about is what I seen. I do not know anything about the various changes in the methods and formulas of mixing which were made under Mrs. Perkins' direction from time to time. As to whether my work was as cooper was not in such a place in the plant that I could see them during the mixing, while I was doing my work as cooper, I would say that at times my work came in contact with them, not often.

Redirect examination:

As to whereabouts I was working while Mr. Perkins was at this plant, I would say on the glue press. It is a machine

we have to press the heading together so that they can get the right sticking power. There was three of us in a crew. There was one man feeds the glue machine with veneering. Another man on the other side takes the heading out of the glue machine and puts it in the press between two dry sheets; there is one man puts the two dry sheets in the heading press. It takes three men to work at the job. I worked on the dry sheet side principally. I work wherever I am needed the most in making the heading. My duties and position were such that I would be familiar with the work being done in the glue spreader. As to whether I ever did work on the glue spreading machines, I would say yes. I sometimes fed the glue machine, sometimes loaded up the dry sheets in the press, and sometimes handled the glued sheets as they come from the spreading machine. I continued to be one of the crew that did this work all the time. It was the feeder's duty to see that the proper amount of glue is in the tank of the glue machine. The feeder was one of the crew of three. When I acted as feeder from time to time I performed this duty.

As to where we were stationed with reference to the mixing tanks, we was right under them. They were built upstairs, right over us.

On occasions I did have occasion to go into the mixing room.

[fol. 640] Recross-examination:

As to my duties as cooper they are at the present time making glue heading; that is, at the present time I put dry sheets on the glued sheets. I remember that at various times after they started using Mr. Perkins' glue, that the glue would come down to the spreader in different shades or colors. As to whether for quite a while after they started with Mr. Perkins' glue they had considerable trouble with it, I would say at times they did. As to whether Mr. Perkins made several visits to the plant after his first test, to try and overcome these troubles, I remember of him making several trips through the mill, I suppose for that account.

Redirect examination:

As to what change, if any, was made in the machinery after Mr. Perkins visited the plant on these later trips, I would say the machines were sent off, re-worked and turned around opposite from the way they was, and another glue pot added on top of the top roller. After this much trouble as before with the glue. It spread in a way change in the machinery was made we did not have as that there was not so much waste of the glue. As to what I mean by "waste of the glue," well, before they made the change of the machines, the old machines before they were worked over, put the glue on the heading in a way that it would sling all over everything and run all over us. This trouble was avoided by a change in the machines. One of these changes consisted in providing a glue tank, glue pot, for the upper roll of the glue machine instead of feeding the upper roll from the lower roll.

As to whether the veneer heading did stick any tighter after the machines were changed, I would say no, not as I could tell.

As to what was this change of color, I don't know which you mean. I spoke of two changes of color, one dry and one wet. From time to time there was changes in the color of the glue; sometimes it would be darker than at other times, as it came down the pipe. As to whether we ever reached a point after which the color continued to be uniform, I would say practically, yes. This was after we were using the wooden tanks, probably three or four months after.

My last few answers have related to the wet glue. I never did notice the glue change in the color of the dry glue at one time. There was one shipment a shade pink from what [fol. 641] we had been using. I do not know whose glue it was. I do not know whether this glue was the Perkins glue or not.

Re-recross-examination:

Regarding the glue being sloppy so that it run over the edges of the sheet and over the men, before we had the machine changed and the upper glue pot put on it, before

this change was made in the machine the glue was always sloppy like this. I do not remember that at various times before the machine was thus changed, that the glue did not slop very much. The glue always slung more or less until we changed the machine.

DEPOSITION OF STEVEN JOHNSON, A WITNESS PRODUCED ON BEHALF OF DEFENDANTS, MARCH 26, 1914

I am a glue mixer at the Brooklyn Cooperage plant. I was connected with the plant in the first half of 1905. At that time I was the night man, cleaning up the glue room. During the early part of 1905 they were using all casein. Afterwards there was a change made. They used some glue they called the Perkins glue. It was used in a machine something like casein was put till we got a chance to have different machines. For a time the glue spreaders, they were originally used for spreading casein glue on the veneer sheets, were afterwards used in the same way for spreading the Perkins glue on veneer sheets; and afterwards different machines were used for the Perkins glue. The Perkins glue was prepared for use in the spreading machine, well, it was added so much water and so much glue, so much solvent. This mixing was done right there at the mill. The solvent was mixed in an iron tank and the water was drawn in a larger wooden tank. Then the glue was added to the water, now the solvent added to that, brought to a certain heat, and then it was ready for use. As to whether the mixture was stirred up at any time, it was mixed by the machine that stirs all the time. The solvent was first dissolved in water in a separate iron tank and then the solution was poured into the large tank. The Perkins glue was mixed with water in this large tank before the solvent was added thereto. The solvent runs through a pipe which leads into the large tank and comes out in a small stream into the large tank. Supposing we are making up a batch of fourteen hundred pounds of glue, then as to how many pounds of solvent would be dissolved in the small tank to be added to the large tank, well, I don't know, [fol. 642] I never mixed it that way. We mix five hundred

pounds and one thousand pounds and twelve hundred pounds. If we want to use twelve hundred pounds of glue, we would use ninety pounds of solvent. I do not know what date it was when the use of Perkins glue was discontinued at this Poplar Bluff plant. It was within the last few years. The character of this solvent that was used with Perkins glue was in the powder form. It acted like it was very strong stuff. I make that remark because it was very strong. It is like concentrated lye.

As to whether I know of any difference between the Perkins glue as it came in 1905, so long as it continued to come in bags marked H and L, well, I can't give my idea straight on that because I don't remember. I do not recall now any difference.

Cross-examination:

I was night man, cleaning up, in 1905. As to when I first started to mixing the Perkins glue, well, I can't give my—give perfect date on that, because I don't know. To the best of my knowledge, though, it was in 1909. It was certainly two or three years after Mr. Perkins started in 1905. I do not know anything about how the Perkins glue was mixed before I started in mixing it about 1909. I do not know anything about the different formulas and amounts that were used in mixing the glue before I started mixing it. I remember that in the early times of trying out Perkins glue, the glue came in bags marked L and H. All the bags was not alike, but as far as this L and H, I ain't positive about that.

During the last few years we used Perkins glue, as to whether it came in bags marked all alike, without the L and H, to the best of my knowledge, the last carload they had out there was branded different from any of the rest of them. It had "Patents pending, Frank G. Perkins." As to whether we had more than a carload of the glue branded in this way, I do not know. I would not be positive whether they did or not. As to whether I did any of the mixing when the bags were marked L and H, I do not remember whether I did or not. As to whether I remember about their having lots of trouble with the glue during the first two years they were trying Perkins glue, I would say no; I can't tell you about that. I was not doing their work after the

first half of 1905. There might have been lots of trouble during this time and I would not have known about it.

In my direct-examination, in describing the way Perkins glue was mixed, I, of course, was referring to the way it [fol. 643] has been mixed since I have been mixing it. I do not know whether it was mixed that way all the time before I started mixing it or not.

DEPOSITION OF F. E. ROBERTS, A WITNESS PRODUCED ON BEHALF OF DEFENDANTS MARCH 26, 1914

I am now working in the dryers. I have worked at this Poplar Bluff plant about nine years and a half. I remember Mr. F. G. Perkins. I could not give you the exact date when I first met Mr. Perkins. The best I can figure out, it was in 1905, along the first of the year sometime. I met him at the Brooklyn Cooperage Company. I understand he was there to introduce some new glue. The first thing I knew about it he was there with the glue and they were preparing to mix some of it and try it out. They made the preparations upstairs in the old pots that they used for mixing casein and carried it down to us in buckets. The bucketfuls of glue thus mixed they put in a glue pot in the machine. The machine, it was a pot that we used, with two rollers in it. The rollers were arranged one right above the other, above the lower roller. The glue fed from the bottom roller to the top roller. The lower roller got its supply of glue, it was in the pot where the glue was. This machine spread the glue on the veneer sheets. One sheet was fed into the machine at a time. As to what was done with this sheet, why it was put into the press. While this sheet was in the glue machine, when we fed the sheet into the machine we were supposed to always dip the sheet in the glue because there was always a roll of glue between the rollers, and that was done in order to get plenty of glue on the sheet. This sheet was covered with glue on the upper side, as well as on the bottom side. Now, this is the old machine that I am speaking of. When this glue-covered sheet comes from the machine it is laid between two dry sheets and veneered and then placed in a hydraulic press in stacks or bales.

I could not say how long Mr. Perkins continued his experiments at this Poplar Bluff plant. He was there for some time off and on. As to my best recollection of the time when Mr. Perkins was there off and on, well, he first come, if I am not mistaken, in 1905, about the first of the year. Then he went away and came back several times, but I can't give the difference in time there was between his trips that he made there.

[fol. 644] After these experiments, well, it seemed like they began to prepare to use the glue, the best that I can recollect. As to these preparations to use Perkins' glue, well, the foreman talked about the plans they would have to make before they could use it, about the tanks, and so on. The first thing that I knew anything about is what I got from the foreman, just hearing him talking about plans they were figuring on to use the glue, about the size of the tanks and what sized pipes they would have to use. They did not add anything to their equipment by way of preparation to use Perkins' glue, that I know of.

As to whether anything was ever done about getting these tanks that I mentioned, I would say, nothing more than what I have stated, only just hearing the foreman talk about the plans they were laying for handling Perkins' glue. They did have these tanks installed. As to how these tanks differed from those that had been used for handling the casein glue, well, there was a good deal of difference. There was the pot that they used for casein was steel jacketed and the glue was cooked, while the tanks that were used for the Perkins glue was made out of wood and the glue was cooked by a pipe that went down in the water. I remember they used solvent in connection with this Perkins glue. The best I could explain, it was white and seemed to be a little in lumps, kind of lumps. I handled it just a little, not much. It would burn and it seemed like it was bad to inhale. I never had any experience with this solvent burning me, outside of the glue. I never handled it with my hands, only in the glue. By having this glue get on my hands after the solvent was added to the glue, I have had it burn my hands, that is, it would eat holes in my fingers with the glue. I overcome this trouble by wearing gloves. I think Mr. Perkins furnished the first gloves, that is, he give me the gloves, sent after them. I believe the first pair that he

brought me was a pair of kid gloves, and handed to me and said to try them. If I am not mistaken, that is the first pair he brought. These kid gloves lasted one-half day. As to whether Mr. Perkins ever furnished any more gloves, well, I would not be positive about that, but I believe Mr. Perkins came up here, at the store here in town, and got some rubber gloves. I am not sure about who got them. I never used rubber gloves in handling the veneered sheets until that time. I did use the rubber gloves after that time in handling the glued sheets as long as I worked there, which was about two years ago. As to whether I ever did anything with any of the solvent to test its qualities, I would say I brought about a quart can of it home and my wife made [fol. 645] some good soap out of it. It was hard soap, just as white as it could be.

As to the Perkins glue, I seen Mr. Perkins eat some of it and it was not poisonous; that was before there was any solvent put in it.

Mr. Perkins got some salve and give it to us to relieve the soreness of our hands.

Mr. Perkins told me the glue was a vegetable glue and that he raised it on a farm in Florida. I cannot remember the name of the vegetable. If he ever told me, I do not remember. He said the glue would make good pancakes and puddings.

I could not give exact dates as to how long they continued to use Perkins glue at this Poplar Bluff plant; but we must have used it six years or more, something like that. It come in sacks. There were letters on them, H and L. We called it heavy weight and light weight; that is what we used the letters for at the mill.

So long as these bags of glue marked H and L were being received, as to whether we noticed whether or not the material so marked continued to be the same, I would say, well, I noticed that sometimes we would get a carload of glue that would be different colors after it was mixed; we got some glue that after it was mixed looked a little pinkish color; that is about all that I noticed that was colored. It seemed as though it stuck as well as any of them. I could not tell any difference when it came to the sticking qualities. I do not know how often we received this pinkish glue, but it seemed as though it would last for about a week or such

a matter. It seemed not just one week only, but at a time, because they run three presses at that time. But I can't remember more than one or two batches that came that way. As to when it was that this one or two batches of the pinkish glue were used, I would say, well, it must have been a couple of years after the glue was introduced there, a right smart bit after Mr. Perkins left. As to whether, with the exception of this pinkish glue, did I notice any change in the glue so long as it was marked L and H, I would say the glue would come different at times, not in color, but we would get glue probably for several days that was harder to spread on the sheets than at other times, and it would waste more, that is, would sling off the sheet, would rope. As to whether these differences would run through the entire carload or would be different sacks or bags in the carload, differ among themselves, well, the best I can say about this, I could not say about the carloads because along at the first I disremember how long that we got four or five car-[fol. 646] loads at one time, and, of course, it was all put in the store room, so I could not say whether it all came out of one car or not, this bad glue that roped; that is, the carloads was probably mixed, but the H and L were kept separate.

As to the glue that roped and which I referred to as bad glue, I did not mean that it would not stick. It just made it bad on us men because it made the floor sticky. I think this ropy glue stuck as well as the other glue.

Cross-examination:

Referring to having bad glue about two years after Mr. Perkins started, as to whether I remember that they had various troubles with the glue during this period, well, I can't tell you positively whether I remember that or not. We would get word from New York every once and a while about the glue not sticking good. That is about all that I remember. There might have been lots of other troubles during this time which I did not either know about or have forgotten about.

My duties at the plant during the first two or three years Mr. Perkins was there was working on the glue spreader. I never had anything to do with or knew anything about the mixing of the glue at that time.

Redirect examination:

I knew that a solvent was added to the mixture. I know we first let water in the tank and when the water was let into the tank the next thing that was done was to heat the water to a certain temperature. This was done by a steam pipe that went down into the water. As to then what was done, that is pretty near as far as I can go. I do not know then whether they put the solvent in the first or put the glue, but I think they put the glue in before they put the solvent in, but I would not be positive about it. They had a chute made up over the tanks and the glue was weighed out and then dumped into the tanks through that chute. They had a tank separate to use the solvent in, made the solution of the water and the solvent and they had a pipe that run it into the tank from the solvent tank.

The condition of the weather would not affect the action of the glue in any way, so long as it was kept in the dry. If the weather was very cold the glue would not act the same as when the weather was very hot. It seemed to be stiffer and more clumsier in the cold than when in the warm, thinner when in summer. I think we would get as good results on a cold winter day as on a hot summer day, that is, [fol. 647] as far as to the sticking qualities. The glue would stick as well on a cold day as on a hot day, but would be stiffer and harder to apply. The action of the glue would differ when applied to dry wood from its action when applied to wet wood or green wood. As to the difference, I do not think it would stick on the wet green wood. As to what kind of wood we folks used in making this veneered heading, well, I have used several kinds. We used gum, black gum. We have made some heading out of sassafras and some out of birch and a little sycamore, about all I can mention, I believe. As to how did the results with respect to use on gum compare with the results as applied to sycamore, I think it was better on the gum. I do not think it would give very good results on sycamore.

Recross-examination:

I do not know anything about the various formulas that were used or the amounts of materials that we were using in mixing Perkins glue.

Deposition of Lem Baker, a Witness Produced on Behalf of the Defendants March 27, 1914

I am a letter carrier. I was connected with the Poplar Bluff plant of the Brooklyn Cooperage Company. I met Mr. F. G. Perkins there. When I first met Mr. Perkins I was working in the glue room as assistant foreman. Mr. Perkins was there experimenting with some glue he had; trying to get the people to buy his glue. That is as far as I know what he was there for. As to how Mr. Perkins conducted these experiments, well, he first mixed his glue in the iron pots, we called them at that time, for the purpose of experimenting with the glue. These iron pots were the same that had been used before that time for mixing the casein glue in. I do not know what Mr. Perkins first put into the iron pot as I was not present during his first mixtures. At the earliest mixture that I know of, the first that he put in the pot was water. The best recollection that I have of it, he next placed the powdered form that he made the glue of. I do not know that I can tell the exact name of it. Then they used something they called a solvent, I believe, that he put in there. I do not remember how he prepared the solvent for mixing in the iron pots. To the best I can remember, the solvent was used afterwards in preparing the glue. As to how the solvent was prepared [fol. 648] afterwards, well, at the time I had anything to do with the mixtures, it was first put into water and dissolved into liquid form. When this solvent was put into the water, it heated the water, made it warmer. The water was made quite warm, the best I remember. As to how the solvent was added to the mixture of glue in water when the mixture was done in iron pots, I cannot remember as to the iron pots. But as to the general mixture in the tanks, the solvent was mixed in iron tanks with water and dissolved and let into the mixing tanks during the process of mixing the glue. Powdered glue was put into water in the mixing tanks and after that the dissolved solvent was added to the mixing tanks. After they built the wooden tanks this was the general practice. I cannot exactly remember when these wooden tanks were built, but they were either built in 1905, the latter part, or 1906. L. B. Walker Manufacturing Company prepared the material for the tanks

and, I believe, put them up; I am not certain. That was the same concern as the Walker-Garretson Manufacturing Company. It was known at that time as the Walker-Garretson Manufacturing Company.

As to how long was it after Mr. Perkins began his experiments that the Walker-Garretson Company built these wooden mixing tanks, I cannot answer that question because I do not know just how long it was, don't remember. My understanding was these wooden mixing tanks were built for mixing what we called at that time the Perkins glue. Before that we used a glue that they called casein glue. The casein glue was mixed in iron pots. As to how long they continued to use casein glue after Mr. Perkins commenced his experiments, I do not remember exactly how long, but my understanding is, to the best of my knowledge, the casein was used at different times for in the neighborhood of eighteen months, to the best of my knowledge. But they would not let the tanks or the pots be taken out for fear we would want to use them for some future time and that at different times for mixing the casein glue. The casein glue was used for making heading and boxing during the time that the Perkins glue was on hand.

Regarding the matter of the plant being equipped for handling casein glue for a long time after we began using Perkins glue regularly, well, my understanding was they might go on the casein glue at any time, if the Perkins glue was not satisfactory. As to how long the Poplar Bluff plant remained equipped to handle casein glue after the adoption of Perkins glue, the iron pots, or part of them, were in position at the time I quit the factory in 1907, Octo- [fol. 649] ber; but I don't know whether they were ever equipped for using or not. As to whether it would have been a simple matter or difficult matter to get the plant ready to use casein glue at the time that I left, well, it could have been done in a short while, as far as I can answer that question, I believe. My recollection is that sometime prior to my leaving in October of 1907 the casein pots or kettles had been disconnected from the spreader below, but I do not know exactly when they were disconnected. The Perkins glue was the only glue that was being used when I quit the plant, October, 1907. As to how soon it was after the wooden mixing tanks were installed

that we began using Perkins glue regularly, I do not remember the exact length of time, but for quite a while we mixed only small quantities in the tanks for trial. The trials were made by making a mixture of different kinds of glue, or different formulas, you might say, for the purpose of experimenting. These different mixtures of glue that were made in small quantities were used up in gluing heading stock. And the best I remember, when one batch, or different batches, was a failure in sticking quality, they were let out throught the sewer pipe, but only a small quantity, or a small mixture rather. As to how did we test the sticking quality of the glue that was mixed in these small quantities, well, I had nothing to do with the testing, although I seen it done by trying to tear the heading apart, and if it didn't stick well or give satisfaction to the superintendent, there was a different trial of glue made, or a different mixture made and tried there. These experiments were made before the installation of the wooden tanks. Also, they experimented with different mixtures after the tanks was built, the wooden tanks.

As to what these different mixtures consisted of, the glue was handled in bags at that time and the different formulas were made, as to the number on the bag, and I suppose the different number represented the different kinds of glue. The different numbered sacks were all mixed or put in the same hopper and let into the tank, or mixing tank, during the process of mixing. I believe it did happen at times that the resulting mixture was too thin. There was none of it that I remember was so thin but what it was used. It also happened that the mixture would be too thick. As to what was done with such mixture, I remember at times when some tanks were too thick, they were thinned with the addition of water. Also, in letting a tank of thinner glue in with a tank of thicker glue.

[fol. 650] As to letters on the bags of Perkins glue, I believe that the only letters that I remember was those that were marked "Gum." I do not remember whether there was any more letters on them or not. As to the letters L and H on the sacks, I believe I do remember. That calls to my mind, I believe, some of them were lettered that way. I suppose they indicate a light and heavy body. Notice was taken of these marks for light and heavy in mixing of

the glue. If we had a mixture that was too light, the next mixture would be a heavier body, if it was found necessary to mix it so. To the best of my recollection, we used up all of our mixtures with the exception of small experimental batches that were turned into the sewer.

The Perkins glue was received in different quantities while I was there, in carload lots, also in lesser amounts. The barrel heading that was glued with this Perkins glue was shipped away in the regular course of business.

They had several different shut downs, or shut down at different times, at this Poplar Bluff plant. I understood the cause of the shut down was for repairs. I know there was quite a lot of repair work done at different times or different shut downs rather. I remember a time when the glue department was shut down while some other portion of the plant continued in operation. In one instance we were shut down in the glue department during the winter of 1905 and '06, to the best of my recollection. I do not know the exact reason for this shut down. I know we did lots of repair work during the shut down, but I do not know what was the reason.

The solvent was packed and delivered in wooden barrels. It was in crystal form or lumpy form. As to what it looked like, well, I don't know. I hardly know what it did look like; not hardly like salt; it was in larger crystals than salt is. In damp weather it would look like wet salt. It might have the appearance of resembling concentrated lye or something like that; although I don't know much about concentrated lye or the appearance of it. As to effect on the hands, it would make the hands burn or smart when it became dissolved on the hands by the moisture of the hands. The Poplar Bluff plant continued to use this solvent when I quit there in 1907, in October. As to when they began using it, it was used in the Perkins glue, or the first they used was in the mixture of the Perkins glue. I would not say that they began using this solvent when they first began using Perkins glue. I knew nothing about the first mixtures, but during the mixtures that I had anything to do with we used the solvent. During the entire period that I knew of the [fol. 651] solvent it continued to be the same. I never knew of any change in the solvent itself.

As to whether the men had any trouble with this solvent, in addition to that of its burning their hands, well, there

as no one that really handled the dry solvent except the nes that mixed the glue, outside of unloading it from the ar. During my time of mixing, I had no trouble in han- lling it as they fixed or made arrangements to handle he solvent so it would not be injurious to the one that as handling it.

As to whether I ever know of any of the solvent affect- ng the nostrils of any of the workmen, I would say no way, nly the dust from the solvent would make the nose burn n breathing it. After they found that the hands were urned from the use of the solvent, they used rubber gloves.

Referring to the glue department being shut down in he winter of 1905 and '06 and as to whether we were sing Perkins glue at the time of this shut down, I would ay the best that I could remember they were using it in n experimental way. If I knew the date when the wooden anks were installed at the Walker-Garretson Manufactur- ng Company, I could not say that that would enable me o fix the time when they began using Perkins glue regu- larly. They used the Perkins glue in a—or mixed the Perkins glue in the tanks after they were completed, in small quantities for some time, but I do not remember just when they began mixing the full capacity of the tank.

Cross-examination:

As to whether I remember that Mr. Perkins came out to the plant often and on a number of times nearly up to the time I left the plant in 1907, I would say yes, he made visits at different times up until something near that date. As to whether he came out on those visits to try and overcome troubles with the glue, I would say yes I think that was his purpose of visiting most of the time. As to Mr. Perkins using other chemicals at the plant besides the solvent, he used different kinds in mixing that I did not know anything about. I do not know what he used in mixing them.

Redirect examination:

Not knowing what Mr. Perkins used in those other mix- tures, then how do I know that he used other chemicals than the solvent, he used something else besides solvent, [fol. 652] as from my understanding it was necessary to

use something in the mixtures for the purpose of making the heading set, as we termed it. I saw him make his mixtures, but do not know what the entire mixture consisted of. I knew at the time what the mixtures were made of, at the time I had anything to do with the mixing. As to whether I ever saw Mr. Perkins make a mixture which contained something besides solvent and water, for treating the glue material, I think I did, yes. I do not remember what the other material looked like. I do not believe I can describe it in any way. I do not remember.

DEPOSITION, TAKEN AT NEW YORK, OF CHARLES LANGLOTZ, A WITNESS PRODUCED ON BEHALF OF DEFENDANTS APRIL, 1, 1914

I am mechanical supintendent for the Brooklyn Cooperage Company, having been connected with them thirty-two years. In the years 1904, 1905, 1906, 1907, 1908, I was manager for the company at Poplar Bluff, Missouri; until June 1, 1906, the plant was known under the name of Lowell M. Palmer, and after that, R. M. Palmer, Agent for Brooklyn Cooperage Company. I had charge of the heading and timber operations and charge of the plant. The plant was making staves, headings and box shooks. The officers of the company at Poplar Bluff were Mr. Elijah Windsor, superintendent; Nelson Windsor, assistant superintendent. Mr. Elijah Windsor is now located in London, Canada; Mr. Nelson Windsor, at South Bend, Indiana; Mr. L. M. Palmer's office is here in New York.

I first met Mr. Frank G. Perkins at Poplar Bluff in connection with the introducing of the use of his glue. He entered into negotiations with Mr. Palmer here in New York and came to Poplar Bluff to have his glue tried out. I can not fix the date exactly when he came to Poplar Bluff, but probably 1905, to the best of my recollection. I do not recall at what time of the year it was. After he first came to Poplar Bluff he had some of his glue shipped there and instructed us how it was to be used; I do not recall the quantity of glue that he first brought there. He instructed in the use of his glue, Nelson Windsor and Frank Baker, who was in charge of the glue room.

hen he first came there I saw this work. As to his first
eration I have no very clear recollection of that, except
at the glue was dissolved in a certain quantity of water
d a solvent added, but I do not remember any propor-
ol. 653] tions. Frank Baker, if anyone, was subsequently
structed as to the proper proportions. This glue was in
wdered form, of yellowish col/or—light yellow. I be-
ve it came in sacks or bags. Before Mr. Perkins came
Poplar Bluff we used casein. The casein was treated
proximately as was the Cassava, except that the Cassava
as treated cold. Ammonia was the solvent used with
sein. The same solvent was not used with Cassava; we
ed caustic soda. I do not recall what proportion of
ustic soda and Cassava were used. I cannot recall any
the proportions. I only know that this glue material
as Cassava from what Mr. Perkins told me. He said
at Cassava was made from a tuber which grew in Florida
d was manufactured at St. Mary's or St. Mary's Lake,
lo not know which. He said it was the same root from
ich tapioca was manufactured.

After Mr. Perkins showed us how to use this glue we
gan to use it. As to what extent did we use it at that
ne, why, the entire number of heads were manufactured
th that particular glue, to the extent of the output of
e plant. I have no way of fixing any exact dates as to
en we began to use the Cassava glue for our output, ex-
pting I believe it was about 1905. I should say it was
thin six months of the time Mr. Perkins first came there.
As to in what quantities did we receive this glue ma-
rial in 1905, after we got fairly started it was received
carload lots. After we got started using this Perkins
ue I do not recollect of our using any other kind of glue.
I recall changes were made in the plant in connection
th the use of Perkins glue. The casein was prepared
melting it in a jacketed kettle of about ten gallons
pacity, and when we started to use the Perkins glue we
andoned those kettles and used a large wooden tank
th an agitator fitted inside to stir up the material; also
ade some changes in the glue spreaders. The wooden
nks were made by L. B. Walker & Company, of Poplar
uff. They were made immediately after it was decided
use his glue.

As to changes that were made in the spreader, the rolls on the old machine were covered with Brussells carpet and the new rolls were cast iron with grooves running parallel with the shaft on the surface of the roll.

As to how did we obtain the caustic potash which we used in our process, it was first shipped to us by Mr. Perkins; later on it was purchased from some St. Louis wholesale drug houses. One was Shields (I do not remember [fol. 654] the initials), and another was the Meyers Drug House. In order to get this solvent at as low a price as possible, I asked Mr. Perkins the correct name of the material which he heretofore had referred to as a "solvent." He later on gave it to me and we communicated with several concerns and got a price on this solvent. We continued using this caustic soda there until after I left Poplar Bluff. I do not recall we used any other chemical with the Perkins glue. The barrel heading that we made with Perkins glue was shipped to the various cooperages of the Brooklyn Cooperage Company and manufactured into sugar barrels. Then it was shipped out as our regular product.

During the time that I was out there at the Poplar Bluff plant, certain departments were shut down, but the plant, or some part of it, was running continuously. The gluing or veneering department was shut down. I cannot recall any date when it was shut down. It was shut down because over stocked with material and shortage on log supply.

Before we used casein the early experiments with veneered heads were made with a hide glue. We changed from hide glue to casein because the excessive cost of hide glue made its use prohibitive. As to the occasion of our adopting the Perkins glue over the casein glue, we were looking for a better glue at a lower price.

As to how does the Cassava glue compare with hide glue, as an adhesive it is inferior, but it is good enough for our purpose. Cassava glue is cheaper, so it makes it possible to use it for such an inferrior article as a barrel head.

I do not remember any date when Mr. Perkins gave us the correct name of the solvent. I should say six months after he came. He gave me the commercial name

and also the chemical name, or the chemical symbol, though I do not remember it at this time. I have no memorandum by which I can fix the time when we began using the Perkins glue regularly, excepting my letter books that are on file in the Poplar Bluff office, but I have nothing here. I conducted most of the correspondence of the Poplar Bluff office prior to August, 1906, but not all. Both myself and Mr. Windsor corresponded with Mr. Perkins.

Cross-examination:

I remember that after Mr. Perkins first came to Poplar Bluff that he came there at various times during the next two or three years. I remember that he came there at [fol. 655] these various times because Mr. Baker was having trouble in using his glue.

I remember that this Perkins glue was shipped there in different sacks or bags marked L and H. I understood that L meant light bodied and H heavy bodied glue. I think they were using this L and H glue up until the time I left. I remember that Mr. Baker had trouble at various times during the first two or three years because the glue sent by Mr. Perkins did not come uniform. My recollection is that although they might get one shipment to work fairly well, it would likely be that the next shipment would be different and would not work well, and Mr. Perkins would have to come out and get it going right.

I remember that a long time after Mr. Perkins started there the spreading machine was sent over to South Bend in order that Mr. Perkins might improve it so that we could use his glue better. I remember that there were some changes made with the gearing, a long time after Mr. Perkins started. I remember that at various times during the first year or two after Mr. Perkins started that he came there and experimented with different formulas, trying to make a better glue for us. I did not keep track of the various changes made by him, but I passed upon the result of his product. After Mr. Perkins started there in 1905 we kept quite a large quantity of casein on hand for some time. I believe this was because we were not sure that he would stick to Perkins glue, but might go back to using casein again. We kept this casein on hand there for about two years after Mr. Perkins started.

Regarding the veneer work which we did at Poplar Bluff being of an inferior class, I mean that it is quite different from the veneering used in furniture and cabinet work and almost any adhesive will give a strong enough joint for barrel heads, whereas such weak adhesive would be entirely impractical for veneering furniture or cabinet work. Almost any adhesive is good enough for barrel heads, provided it is cheap enough to use and will hold the plies together long enough until you get them into the barrels. I wish to add, in addition to that, it has to be somewhat water proof and remain intact until the barrel arrives at its destination. That is, any adhesive which is sufficiently water proof and will hold the heads together until they reach their destination is good enough for our purposes out there. We do not require any such strength of joint as is generally [fol. 656] obtained by the use of hide glue in cabinet or furniture work.

When I speak of cheapness of the glue, I base this upon its covering or spreading capacity, that is, the number of square feet that can be covered with a pound of glue. What we desired largely at Poplar Bluff was cheapness and accordingly we would dilute the glue with water as far as possible in order to get as large a covering capacity as possible.

Redirect examination:

At the time I was at Poplar Bluff there was no other cooperage plant there known as the Palmer Company.

As to what changes were made in our glue spreading machinery at the time it was shipped to South Bend, I remember several; I may not remember them all. I think a trough was applied to the upper side of the roll so that the veneer heads received a supply of glue from both sides, and the planing of a groove in the roll was another change that I remember. I do not remember any others at this time.

It was the decision of Lowell M. Palmer that we should use Perkins glue at the Poplar Bluff plant. I do not know what glue was used after I left the Poplar Bluff plant. Mr. Parker, the president of the company, and Mr. Barron, the manager, are the ones who would have had to determine whether or not to abandon Perkins glue and go back to using casein glue. If hide glue was as cheap as Cassava

glue, hide glue would be employed in making these barrel heads. As to what extent is Cassava water proof, it is very slightly so. As to what means I have of judging the relative holding power of Cassava glue and hide glue, this is only by observation in destroying the joint of the head. After the head was thoroughly dried, we pried it apart with an ax or a wedge and chisel and saw whether the adhesive was sufficient to tear the wood and, if so, we decided it was good, and if it was not, we decided it was poor. My experience is that hide glue is stronger than Cassava glue. I do not know how many times stronger.

Recross examination:

When I speak of the relative strength of Cassava glue and hide glue, I mean a Cassava glue that was used at Poplar Bluff while I was there.

[fol. 657] Redirect examination:

As to whether the glue which has been used since I left the Poplar Bluff plant is any stronger than what was used there, while I was there, I cannot answer, because I have not examined the heads close enough to answer that question.

Deposition, Taken at New York, of Frank Shanley, a Witness Produced on Behalf of Defendants April 1, 1914

I am clerk for Brooklyn Cooperage Company and appear in response to a subpœna. I have with me the invoices, writings and telegrams named in the subpœna and produce them. The papers which I have produced are original papers coming from the regular files of the Brooklyn Cooperage Company.

(Copies of papers produced, offered as Defendants' Exhibit, Brooklyn Cooperage Invoices and Papers, Nos. 1 to 19, inclusive.)

TESTIMONY OF NELSON WINDSOR, A WITNESS CALLED ON BEHALF OF DEFENDANTS JANUARY 15, 1915

I am superintendent of the engineering and drafting department, Singer Manufacturing Company, South Bend. I have been with them almost eight years. I went with them, I believe, in 1907. Before going there I was employed at the Evansville Veneer Works, at Evansville, Indiana, about six months. Before I went to Evansville, Brooklyn Cooperage Company, Poplar Bluff. I was assistant superintendent there. The plant was known by a good many as the Palmer plant. I think I commenced there in June, 1899. Charles Langlotz was manager during 1905. Frank Baker was foreman of the glue department.

I did know Frank G. Perkins. He came to the Poplar Bluff plant at the request of L. M. Palmer to introduce his glue. I believe that was in the early part of 1905. I cannot state any more accurately from my memory. When he first came there to introduce his glue, he ran a series of tests, glued up veneered heading to demonstrate that his glue would hold the heading together well, that is, that it would make a good job of veneering the heading. I think the first of these tests, or rather, the first batches of glue that Mr. Perkins made up were made in a steam jacketed glue kettle which we had used for preparing casein, which was the ma- [fol. 658] terial we were using for glueing heading prior to Mr. Perkins bringing his glue. If I remember correctly, we installed a small mechanical agitator in one of these pots and I think Mr. Perkins made up quite a number of batches of glue before he succeeded in getting a batch that we could mix properly with this agitator and that would pass through our glue rolls and be applied properly to the heading. He finally succeeded in getting such a mixture, but he could not always duplicate the mixture.

As to the equipment that we had there for mixing up casein glue and applying it to these veneers, we had a series of steam heated glue kettles on a floor above the glue room proper. We mixed the casein in these glue kettles by the application with the casein of a certain proportion of water and of ammonia as a solvent. It was necessary that the casein be maintained at a certain temperature and we conducted the casein from these mixing kettles to the glue ma-

chines below through water jacketed pipes. The casein was then applied to the veneers by carpeted glue rolls. I believe the machines were made by A. S. Nichols Company of Boston. I am not quite sure.

As to the glue roll machines for applying the glue, the machine as a whole was made of cast iron. The bottom of the machine, what is usually termed the glue pot, the bottom glue pot, was of cast iron made hollow and heated by steam. The bottom roll, if I remember correctly, supplied the glue to the upper roll; in other words, there was no upper glue pot or glue receptacle.

The veneers that we glued up were about three-sixteenths inches in thickness, about twenty-one inches square. Three layers went to a barrel head. Only the center layer passed through the machine.

As to how long was it after Mr. Perkins began his experiments that he got this glue which would work on the machines, I think I have already stated that he succeeded in getting some of it at the start but that he had trouble in duplicating those batches. If my memory serves me right, that trouble continued for quite—well, the full length of my employment there. I could not say whether the first batch that he mixed was satisfactory to use.

He left there, I think it was in August, 1906. I had a little trouble securing those dates. I had no correspondence on it, and I am not real sure whether it was 1906 or 1907, and whether I met Mr. Perkins in 1905 or 1906. I was in charge of these experiments and reponsible to Mr. Palmer for these experiments. I think I conducted the cor-[fol. 659] respondence with Mr. Palmer. He was located at that time in New York City. I think the address was 184 Front Street. I did make a report on this process to him.

On being shown letter dated Poplar Bluff, Missouri, 2-21-05, addressed to Lowell M. Palmer, and signed Nelson Windsor, I remember writing the letter. It appears, then, that I was there in February, 1905. I stated in my testimony, I believe, that it was 1905 or 1906, Mr. Perkins came there. It must have been 1905.

As to whether there was any agreement entered into as the result of these experiments in regard to the use of this glue at Poplar Bluff, if there was I did not see it. As to

what followed these experiments, as to whether any changes were made in the machines or apparatus of the company to adapt them for the use of the new glue. I would say yes, changes were made. Suitable mixing tanks were installed more applicable for handling the Perkins glue than the mixing apparatus that had been used for the casein and the rolls of the glue machine were remodeled.

I cannot say in what quantities the first two or three batches of glue may have been received, but some time later the glue was received in carload lots. I cannot say definitely how much later. I would say within four months, but that is just from memory.

As long as I was connected with the plant no other glue than this Perkins glue was used there after Perkins started it in 1905. The barrel heads which were glued up by Perkins glue were put in with our regular stock and shipment made to various points that we shipped such headings. The glue had the appearance of coarse flour; sometimes quite coarse; sometimes rather fine; it varies somewhat in color. It was received in bags? I believe the bags weighed about two hundred pounds, that is, held about two hundred pounds of glue. I cannot recall exactly how these bags were marked, but it runs in my mind there were numbers on the bags, that is, numbers, I suppose, to identify the glue or the grade of the glue; and those numbers differed. As to letters on the bags, I cannot say whether that identification was in a number or in a letter. All the glue that we received, this glue material for making glue, was not alike. Some was fine; some was rather coarse; some was rather a white color; some running towards a cream color. We mixed the various varieties of glue. The purpose of mixing these different varieties of glue was to obtain a solution that we could use in our machine. We placed in the [fol. 660] tanks by measure a certain quantity of water and into the tank of water while the mechanical agitators were in motion, emptied the glue. After a thorough agitation we placed a certain amount of solvent. I believe the solvent was made up of a solution of caustic soda. This solution of caustic soda was run into the batch or into the solution in the tank slowly. The material was stirred during the addition of the caustic solution. I do not exactly recall the proportion of water which was used with refer-

ce to the amount of glue material. I believe it was about
o to one. We calculated the weight of the water through
size of the tank and placed a measuring stick in the
nk, so that we very nearly determined the water by
ight,—not positively.

As to the proportion of solvent with reference to the
ight of the starch, we varied that considerably at the
rt. I believe at the time I left we were using about six,
ll, between five and seven per cent about that. I can-
t say whether that was five or seven per cent of the dry
ustic soda in relation to the weight of the flour or whether
t was five or seven per cent of the weight of the caustic
da in solution in relation to the solution of the glue. I
annot say definitely whether that five or seven per cent
s taken with reference to the starch or with reference
the water in which the starch was put. I cannot say
ether that five or seven per cent was with reference to
water in which the solvent was first placed before add-
g it to the starch. I learned of the character of the glue
aterial which we were using from Mr. Frank Perkins
en he came to Poplar Bluff, which was along in the early
rt of 1905. As to the character of the solvent that was
ng used, this caustic soda, I knew that, I would say, not
er than the middle of 1905. I cannot recall whether Mr.
rkins used that soda solvent in the first batches that he
de or not. There was quite an effort made to dissolve
glue by heat and that was especially done in the first
all batches made with the glue kettles in which we had
ed the casein. I can not say whether in those experi-
nts with heat any caustic soda was used.

What I referred to as coming in in carload lots was
rkins glue. The Perkins glue did come in in dry matter.
far as I have learned since, it was a cassava flour. The
sein was what we used prior to the adoption of Perkins
ue. That had come in carloads and it is a product of
lk, by-product.

I did not know from the first that this material that
rkins was using was cassava starch. I do not recall when
irst knew that it was cassava starch.

ol. 661] The letter dated 22nd of February, 1905, re-
shes my recollection in this respect. I knew at this time
yway because that was stated in the letter.

In the letter dated 3/24/05, which is one of my letters, I stated that the second car had arrived on the 22nd instant. Therefore, we must have received a car prior to that.

As to when we began running the Perkins glue exclusively, I refer to letter dated 4/29/05, we must have started, as I state in this letter:

"We have been running Perkins glue exclusively now for one week, and I think I am safe in saying we will experience no further serious trouble in handling this glue as mixed for sugar or slack barrel heads."

When we commenced the purchase of caustic soda ourselves I think it was gotten from St. Louis. I cannot recall the name of the firm. I do not recall about when we began purchasing this for ourselves, but the records there show. The letter dated 5/12/05, addressed to William Schield Manufacturing Company, refreshes my recollection in this respect, as to the time when we commenced purchasing the caustic soda and from whom we purchased it.

Q. What were the changes in the process of making the glue to which you have referred in your testimony?

A. Do you mean the changes in the process of mixing the Perkins glue?

Q. Yes, after it was adopted as the regular glue for the plant.

A. In receiving the glue in carload lots, and the glue identified by number or letter as I have mentioned heretofore, we worked on the supposition that glue of the same identification mark would work approximately the same, that it should mix the same. We found in a great many cases—well, I won't say a great many cases. We found in some cases that this did not follow and that glue made up or mixed by the same proportions and with the same glue according to identification mark did not give the same result, and this result was especially marked in the viscosity of the glue, you might term the viscosity. Some of it would be very heavy and we would hardly be able to pass it through our glue roll and succeed in putting it on the heading properly. Another batch would be rather thin, resulting in hardly enough spread on our heading. In some cases where we received a carload after we had mixed the first

[fol. 662] batch, we had to experiment with it. Mr. Perkins did that while he was there also. He would use the same grade with it and then by his experimenting he would determine about how to mix it, and likewise after, while he was away from there, we did the same. Then we would use up the remainder of the car. The car itself seemed to run rather uniform.

Q. That is to say, if the glue was running too heavy you would mix a lighter starch with it, starch glue with it, and if it was running too light you would mix a heavier body of starch with it, is that correct?

A. What do you mean by a lighter body or a heavy body starch, that body determined after it was mixed?

Q. Yes.

A. Yes.

Q. So that these changes and experiments were simply in the proportions and the different grades of starch used?

A. Yes.

Q. Will you state, briefly, what, if any, changes in the machine and apparatus employed were made, the machine for applying the glue to the veneer?

A. We abandoned the carpeted, jacketed or covered roll and substituted a fluted roll, the flutes running with the axis of the roll.

I do recall someone visiting our plant at Poplar Bluff in order to inspect this process of applying Perkins glue. I think the superintendent of the Singer Manufacturing Company plant, at Cairo, Illinois, and I believe one of its foremen. I do not recall when this was that they came to Poplar Bluff to inspect the plant. Letter dated 4 29 05, addressed to Mr. Whitney, superintendent of the Singer Company plant, Cairo, refreshes my recollection in this respect. The letter does not state. I believe it was in the near future. I could not say surely. The letter states:

"We will be pleased to show you at any time whatever in this line may be of service to you."

I believe it was within six months of that time that Mr. Whitney came to the Poplar Bluff plant. I cannot say whether surely Mr. Perkins was there at the time, but I believe not. I think I showed Mr. Whitney and his fore-

man the process myself. I do not recollect whether I explained to him the proportions, the materials we used. I do not recollect whether I told him that we used cassava glue, cassava starch.

As to shipping glue to the Singer Manufacturing Company at Cairo, I think I made such a shipment. As to [fol. 663] what it was and what the amount was, I do not recollect. I do not recall when it was. Letter dated 5/17/05, to F. G. Perkins refreshes my recollection as to the shipment of this glue stock. The letter states:

"I will comply with your request by making shipment of this tomorrow, being too late now to engage a drayman today."

The letter was dated 5 17 05. I would say that the glue was shipped on 5 18 05.

I do recall somebody else coming to the Palmer plant to inspect the process of using Perkins glue. One gentleman's name was Talge, Charles Talge. The other gentleman's name was, I believe, Callahan. I believe they were connected with the Frost Veneer Company, Frost Veneer Works. I showed them the operation of applying this Perkins glue to the veneer and explained the process to them. I cannot say whether I told them the materials which were employed. I explained the process as fully as I knew at that time.

I am not sure that there were any other people came to inspect the glue process at the Palmer plant.

Referring to Windsor letter dated 6 19 05, and Mr. Newman of the Wilts Veneering Company, to whom that letter was addressed, I am not sure that he ever came to the Poplar Bluff plant.

Referring to Windsor letter dated 5 7 06, to Waynesville Wood Manufacturing Company, and whether a representative of that company ever came to Poplar Bluff to inspect the plant, this letter is apparently in reply to an inquiry from the Waynesville Wood Manufacturing Company. It does not state anything about any representative of theirs coming to Poplar Bluff, and I have no recollection of any representative coming there. I have no distinct recollection whether Mr. Newman or other- came to the Poplar Bluff plant. I have an impression in my mind that

there was another party came to Poplar Bluff besides the two mentioned, but who it was and when they came I could not give information.

Referring to letter 65, dated 11 8 05, addressed to F. G. Perkins, Plymouth, North Carolina, I do not know anything about his efforts to introduce the use of his glue at Plymouth.

You ask: From the time Perkins glue was adopted exclusively in April, 1905, until I left the Poplar Bluff plant in August, 1906, did they continue using Perkins glue exclusively in their regular business as I have described? I believe so.

[fol. 664] The output of the Poplar Bluff plant in barrel heads, say of glued, veneered barrel heads treated by the Perkins process from, say May, 1905, until August of the same year, was between fifteen and sixteen thousand pairs of heads, or enough heads to make about fifteen thousand barrels. These heads were all shipped out just in the regular course of business for making barrels. We made no difference between that stock and any other stock we had previously made.

So far as I know, we bought all of the starch glue material from Perkins? It was purchased through the New York purchasing department. I believe the glue was all paid for. That was done through the New York office.

As to whether they used Perkins glue at the veneer plant at Evansville, where I worked after leaving Poplar Bluff, it was not a veneer panel business. They used no glue. They manufactured veneers, but they did not glue up panels.

I am not familiar with the glue department of the Singer Company. I believe they used Perkins glue there. They also used animal glue. As to the difference in their use of the Perkins glue and animal glue, the classes of work for which they are respectively employed, broadly speaking, the animal glue is used for joint purposes, the Perkins glue for veneering purposes. As to why they do not use the Perkins glue for joint purposes, the probable reason, I believe, is that the Perkins glue is difficult to apply for a joint. The animal glue is more suitable for that purpose. Furthermore, with the animal glue, the cost item being forgoten, you can secure a better joint. The animal glue is

not necessarily more expensive than Perkins glue. The higher grades of animal glue are much more expensive than Perkins glue.

Cross-examination:

Referring to my letter No. 73, dated 5/7/06, where I say:

"For the class of work we are doing, I obtain a sufficient adhesive result in covering"—etc.,

I mean to indicate by that that the class of work done at Poplar Bluff was quite a different class of work from that done in the regular furniture veneering plants.

As to whether the wood used in making up these barrel heads is very rough, unfinished, as compared with the woods used in regular furniture veneering factories, I would not say very much heavier; it was some heavier.

In the letter dated 5/7/06, I say:

[fol. 665] "We have never used hide glue extensively in our work, but in the tests made forty to forty-five square feet with a nine cent glue was about the best result we could obtain."

As to whether when we tried this animal glue we mixed it in such proportions of water as to cover as many square feet as possible, and in doing so we had a glue so weak that it would not be sufficient for high grade furniture veneer work, I would say to that, that not requiring the same strength of joint in a barrel head that you would in a furniture business, we did not attempt to get as strong a joint and accordingly we used the glue at a weaker solution, used much more water.

It is true that after Mr. Perkins had come to the plant at Poplar Bluff and stayed there for some time that he kept returning at various times while I was there, to overcome troubles. I believe this was kept up until the time I left the plant.

It is true that we kept on hand a considerable quantity of casein after we had started using Perkins' adhesive. It is true that we kept this considerable quantity of casein on hand so that we might have it ready in case we had to abandon Mr. Perkins' adhesive altogether.

As to whether I was not mistaken when I mentioned the proportions of water to Perkins' dry adhesive base used

at Poplar Bluff, as to whether it was not four parts of water to one of dry base that was used there, at least in most cases, I believe I stated in my testimony that I thought it was two to one. That is a long time ago and I kept no record of the proportions and I could not state definitely whether there were two to one, or whether it was mixed two to one or four to one. I would say it might have been four to one.

As to whether or not in veneering done at the Singer plant the Perkins glue gives just as strong a joint as the animal glue which they had been using, for the work that we used the Perkins glue on I believe we got as strong a joint with the Perkins glue as we did with the hide glue.

When I spoke of joint work on which animal glue is used, I did not necessarily mean butt joint work, but jointing, as I understand it, in the furniture business is where you are glueing one heavy piece of wood, such as joining pieces of stock together, to make one wide board in which the edges of the stock—or in which you apply the glue to the edges of the stock. In almost all cases the glue is applied to these edges with a brush as distinguished from being applied [fol. 666] thereto with the usual glue roll. The reason for not using the Perkins glue on this joint work is, as I believe I stated in my testimony, on account of the difficulty of application. It is true that in the making of these barrel heads it is not necessary to have such a strong joint or such a permanent joint, because the heads are put into barrels and after they are in the barrel the barrel helps to keep them together. As to whether it would not make much difference as long as the heads held together for a sufficient time to get them into the barrels, I would say not entirely so. Barrel heads, of course, do not need to be held together with any such strength as regular furniture.

I did not know in 1905 or 1906, and never have known, how Mr. Perkins made this dry adhesive base which he shipped to Poplar Bluff.

Redirect examination:

As to what became of this casein which was kept on hand, I could not say. I believe it was on hand when I left the plant. As to why I thought there was any danger of our having to abandon the Perkins glue, I believe the rea-

son for holding the casein on hand could be stated that in any business you would hardly feel justified in abandoning your old process and abandoning all means of going back to it; in adopting a new process you would feel, a person who was conducting a business properly would feel that you ought to have some means of carrying on your business in case the new process fell through from the quality of the material or from the standpoint of the concern manufacturing it being able to supply it. As to what difficulty there would have been to have re-adapted our plant for using the casein, I believe that is stated in my letter to Mr. Palmer on the report regarding the Perkins glue. I think, if I remmber the letter correctly as I read it a few minutes ago, it said that about an hour's time would suffice to change from the one to the other. In other words, we kept all the apparatus for handling the casein glue intact. As far as I know, we did not go back to it at all. This was a mere cautionary method, keeping this casein.

As to what, if any, changes Mr. Perkins made when he came back to the Poplar Bluff plant after we were running the Perkins glue as a regular process, I cannot recall exactly, but it seems to me the changes were along the line of directing us how to overcome the difficulties that I spoke of previously; that is, the difficulties in securing the proper viscosity with the glue, or rather with the material that was sent us to make the glue out of.

[fol. 667] As to whether he made any changes in the machine or apparatus, I think we started out with what we found afterwards to be a rather light mixing apparatus; that is, it was rather weak, and we found, or rather he found, that a heavier mixing apparatus would enable us to mix the glue to better advantage. I believe that was to enable a heavier bodied glue. I am not sure on that, but I believe we took out the mixing apparatus that we had in our wooden tanks and renewed it with a much heavier apparatus. As to whether we made any changes in the glue applying machinery, I think the fluting of the rolls was changed several times. The purpose of these changes was to give the proper spread on the veneers with the different mixtures that it was found advisable to resort to from time to time. I do not believe we ever had to dispose of any substantial quantity of the glue which we

had mixed up, without using it. I do not believe we ever had to waste it.

Recross-examination:

As to whether some of these changes in the machinery either in the spreading machinery or the mixing machinery, were made as late as well into 1906, I could not say on that point.

Testimony in Solva Case of Julius B. B. Stryker, a Witness Produced on Behalf of Plaintiff January 13, 1915

I am vice-president and general manager of the Perkins Glue Company; have held that position about five years. The business of the plant of the Perkins Glue Company is manufacturing and selling Perkins veneer glue, almost always known to the trade as Perkins glue.

I produce trade publications having therein articles on Perkins glue or vegetable glue.

(Trade publications produced by witness marked "Plaintiff's Exhibits 3 to 9, inclusive.")

In testing our finished product (glue base) the viscosity or strength is not relied upon alone, but each batch is tested by dissolving it under the method of the second step of the process as it is called, and the result of this dissolving forms the liquid Perkins glue, either with or without the use of heat, and this finished glue is then applied to blocks of wood, allowed to dry and set properly, and these blocks are then tested on a special testing machine for the actual breaking strength, and in many cases the liquid glue is [fol. 668] applied to veneers for further tests of its strength and quality, and in cases where there is any doubt the liquid glue is applied with the large glue spreader and actual veneered panels or tops are built up.

In making these tests of the finished goods then are also noted the general characteristics of the glue after dissolving, such as spreadibility, flow, color, etc.

We have in times past used what we knew as the acid process. As to the details of that, the mechanical han-

dling of the batch was quite similar in both instances. The starch liquor had added to it acid, sometimes hydrochloric, usually sulphuric acid, up to about two per cent of the total weight of raw material employed, and the starch liquor is heated for from four to six hours at a temperature of about 130 degrees Fahrenheit. In using this process it has found that more frequent testing was necessary on account of the process going too far or the chemicals and the heat acting too rapidly, and the method of making these tests was about the same as in the case of the alkaline process. When the body of the starch is reduced to the desired point, the batch is neutralized with a solution of caustic soda, and dried in a similar manner to that which I have described in connection with the use of the alkaline process.

The acid process which I have outlined above was the one which I believe Mr. Perkins considered to be the best for the purpose of making a wood or veneer glue. However, it is only one of a number of similar processes which Mr. Perkins had worked with and tried out.

The second process, that is, the treatment that is accorded to this Perkins glue base in order to make up a glue both in the plaintiff's factory for demonstration or testing and also by our customers under our instructions, in order to prepare the glue base described above and as carried out today in our customers' factories or in tests made in our own factory, a glue mixing kettle and glue spreading machine are employed. For the purpose of preparing the glue a suitable quantity of the base is weighed out carefully and it is poured into a glue kettle into which water has previously been put. The water in all cases is either carefully weighed or measured out, and about two and one-eighth parts of water are usually used today to one part of the dry glue base. This mixture is agitated, preferably fifteen or twenty minutes.

After the glue base and the water have been agitated, as described above, the solvent, which is sometimes caustic soda, is slowly and gradually added to the mixture. This should be done very gradually for the reason that a [fol. 669] thorough mixture is very desirable. Sometimes seven per cent, or thereabouts, of caustic soda is used as solvent, and no heat is applied. In other cases, less than

seven per cent of the solvent is employed, and in such cases the smaller quantity of solvent is assisted in its work of conversion or bringing the batch across by the addition of heat.

In the case of a hot mixture, as the use of the heat is usually termed, considerable care must be taken that the temperature is not run too high nor applied too long. In the case where no heat is used, the resultant glue is transparent, and in the case of a hot mixture the resultant glue shows, while still approximately transparent, a brownish or straw-colored tinge in it.

After the batch has come across under the action of the chemical, the agitation or stirring should then be continued, preferably not less than thirty minutes, and in most cases this is done, although I have known of shorter periods being employed, but is it not desirable.

After the glue has been prepared after either of the methods I have described, it is discharged from the glue mixer through an iron pipe, usually four inches in diameter where this pipe is attached to the mixer, and two inches in diameter at the discharge end where it empties into the glue spreader. Proper valves are provided in this discharge pipe so that the required amount of glue can be let down into the spreader as it is needed. The glue spreader has two rolls which pick up the glue and transfer it on to the wood surface which is to be glued up. One glue roll is situated above the other, and they are provided with grooves which pick up the glue in proper quantities and assist in the application on to the wooden surface. The spreader is also provided with scrapers which work more or less automatically, and the object of these scrapers is to remove any surplus glue from the roll before the glue comes in contact with the surface to be glued up. Each roll is also provided with a glue box which contains glue enough for a run of approximately half an hour in most cases, without being replenished from the glue mixer above. The veneers or core stock to be glued up are one or the other, run through the spreading machine, and while passing between the rolls the latter transfer the glue on to the two surfaces of the piece being run through. After the glue has been applied in this manner, the veneer or core stock,

as the case may be, is laid on top of another piece of veneer or core stock which has previously been laid out on the table or bench.

[fol. 670] In the case of three-ply panels or tops, one dry veneer will be placed on top of the core stock previously run through the machine, and another piece of dry veneer would immediately be placed on the bottom, and another piece of core stock run through the machine and placed between other pieces of dry veneer, and this operation would continue until a bale or retainer full, as it is commonly called in the woodworking plants, has been built up.

In the case of five-ply veneer, the portion of veneer next adjoining the center or core stock is usually run through the machine, and this would ordinarily be laid upon a piece of dry veneer, and the center or core stock placed on this and then a fourth piece glued and applied on this, after which another piece of dry veneer would be placed on top of it, and the operator would continue by this method until his bale or retainer has been completed.

The building up or laying up of these retainers or bales is preferably done in as short a time as reasonably can be employed, as it is not desirable to allow the surface of the glue to become set prior to the surfaces of the wood coming in contact with the glue on the panel. These bales, as soon as they are completed, are removed and placed in a hydraulic or screw press, as the case may be, where they are subjected to a pressure of approximately one hundred pounds to the square inch. This pressure is applied long enough so that all the glued surfaces may come into near perfect contact as is possible, and while this is taking place bolts or retainer rods are placed upon the bale in such a way that they retain the pressure in the bale as soon as the pressure is released on the press itself. These bales are then set to one side, usually over the following night, to allow the glue to set. After the set has taken place, the retainer bolts are slacked off and the pressure removed, and the panels or tops are thereupon removed to other portions of the factory, sometimes being placed on thin strips of wood to assist in drying out, and sometimes being put through a re-drier or into a room containing a low temperature which is for the purpose of drying out any moisture which may remain in the veneer.

(Witness produces photographs of the kettle and spreader, marked "Plaintiff's Exhibits 10, 11 and 12.")

In this process of reducing the Cassava during the first stage all the raw material which is orginally put into the process remains there. There is nothing dissolved in the [fol. 671] first process. Whatever has been dissolved in the water used in the first process is carried out in that water, carried away in that water.

None of the articles relating to glue in the trade journals produced by me above were inspired by me or our company in any way.

Cross-examination:

As to the effect of continuing the treatment in the first step, the treatment with peroxid, after the conversion or degeneration had progressed far enough for our purposes, I would say I am no chemist and I do not pretend to be able to answer your question. The point that I have always had to look out for in manufacturing the glue was not to carry it too far, and I am not prepared to say myself whether it is a correct chemical theory or not, not being a chemist. But our theory in manufacturing has been that the amount of chemical which you speak of and which we use is, upon becoming exhausted, not sufficient to carry the product materially beyond the point that we want it to go, and as to what would happen if much larger quantities or sufficiently larger quantities were used, I am not prepared to say. I have, however, carried the treatment further than was found advantageous on some occasions. The character of the product we made in a case of that kind would be, if carried far enough, entirely lacking in characteristics of a good wood glue. By that I mean that there would be great trouble in getting it to flow preperly, it would be short and pasty and lardy. It would not go through the pipes as would be required of it, and its native glue qualities would seem to be more or less completely destroyed.

If we carried the process too long in point of time, using the correct amount of chemicals, if the proper amount of chemicals were used at the outset, there would be no effect by carrying it a longer time. The chemical used would seem to exhaust itself within an approximate given

time, and you could stir that batch for a week if you wanted to and there would be no appreciable difference.

As to which of these processes of treatment we used first, the acid process or the peroxid treatment, according to my recollection, the goods that were first tried out for use in wood glueing were made by the acid process, similar to the process which I have described. According to my recollection, it differed from that process as to the amount of acids used and the length of time the acids were employed, the degree of heat, the time that the heat was applied and [fol. 672] stopped, and different combinations of acid were tried out, a great many. I say a great many, I remember a few different acids that were tried out from time to time.

We have used this acid process, a similar acid process, for making other materials than wood glue from starch; we made a sizing for wood by a similar process to the one I have mentioned, and then some time prior to that, in fact, several years prior to that, we used an acid process somewhat similar for manufacturing sizings for cotton goods, rope, yarn and things of that nature.

The purpose of this sizing for wood was to fill up the pores of panels or tops used after they had been glued up, so that in the finished job—in finishing the top of the panel with varnish and oils and things of that kind that the finish would stand out and show up well instead of sinking down into the pores of the wood.

I believe we used a treatment of peroxid and caustic for attempting to make a laundry starch, but it was not a success. We abandoned—the Perkins Company abandoned that and we did not follow it up after that.

Redirect examination:

When I said it made no difference in carrying out the preliminary treatment, if we used the proper amount of chemical, it would not make any difference if it was carried too far in point of time, that is, if it was carried longer in point of time than the necessary amount of time which we usually employed, I referred to the alkali process alone. That is not true, of course, of the acid. In respect to the acid process, to make a suitable wood glue, the acid process would have to be stopped at the exact time.

TESTIMONY TAKEN JANUARY 19, 1915, OF JULIUS B. B. STRYKER, RECALLED BY THE PLAINTIFF IN REBUTTAL

I was secretary and treasurer of the Planters Manufacturing Company, and superintendent of the factory of the company at Lake Mary, Florida, and since that organization of the Perkins Glue Company in 1910 I have been manager of the Lansdale, Pennsylvania, plant for one year or until 1911, since which time I have been vice-president and general manager of the Perkins Glue Company.

My work as superintendent in the Florida factory kept me in touch with the process carried out by Mr. Perkins in his factory from 1904 to 1910, say. I was in touch with [fol. 673] the work which Mr. Perkins was doing in connection with adhesives during this period. At times I visited the plants at Poplar Bluff, Missouri, and the Singer Company at South Bend, Indiana, where he was working or had been working with his adhesives. Mr. Perkins kept me generally informed of the work he was doing in connection with adhesives during this period. In 1904, 1905, 1906 and 1907, I was in personal charge of the carrying out of the process at the factory. In fact, I think I ran myself the larger number of the batches of different materials which we turned out during that period. In fact, I had considerably more to do with the processing of these goods at the factory than any other one person.

As to the different products which we turned out, I mean there was a very great many different treatments used. Attempt was made to keep these various treatments or processes which were carried out at the Florida factory secret. Everything was done which was possible to do to keep the process, when the work was being done, a secret; and with this end in view the work was divided up among the different men, of which there were not very many employed, with the idea that just as far as possible one man would know and do his own job and not know anything about the other man's job. And at nights and Sundays a watchman was kept on the premises at all times. A barbed wire fence was built around the factory and the only gate—or two gates, I believe there were—at any rate, all of the gates were padlocked at all times. And further than this, Mr. Perkins allowed or paid several of the more trusted men a bonus on a monthly basis.

Yes, all of the men employed in the plant were told a great many times that they were to talk to no one in regard to the work that was being done there, and in fact on several occasions we discharged men we thought were not living up to instructions.

This system of secrecy as kept up at Florida until the plant was moved North in 1909, or the early part of 1910.

Mr. Perkins did not ship any of his starch products or adhesives to Poplar Bluff, or the plant of the Brooklyn Cooperage Company at Poplar Bluff, Missouri, in 1906. I think the last shipment he made to them in the year 1905 was about August, 1905.

As to the business of Mr. Perkins and his company, the Planters Manufacturing Company, say during the year 1904, it was manufacturing cassava starch from roots which [fol. 674] grew in Florida, and also manufacturing from cassava starch or flour sizing for cotton goods, paper, carpet cops and cordage, and also making some paper box adhesive or paper finishing sizing, and in manufacturing laundry starch.

A large portion of the materials which Mr. Perkins shipped to Poplar Bluff in 1905 was material which had originally been made for some of the uses which I have just enumerated in my answer to the previous question, such as these sizings and things. Some so called raw starch was shipped there. Mr. Perkins shipped so called raw starch there for the purpose of mixing it in with different preparations to make a base to work with, and his idea at the time was that a certain mixture of the raw starch would strengthen the adhesiveness of these other materials which he shipped there. As to why Mr. Perkins did not mix it always in the same proportions, well, for one reason, Mr. Perkins didn't know what was required of an adhesive when he started in on the Poplar Bluff work. After he got some idea as to the requirements he found that were desirable he had to try and use different proportions of raw material with these sizing materials or materials which had been degenerated to a more or less degree, in order to get them to work at all, or so that they would flow out of a mixer, flow through a pipe, so that they could be spread at all with machinery. There were other difficulties Mr. Perkins encountered in this work at Poplar Bluff. In addition to hav-

ing to have an adhesive base to work with, which would give a sufficiently strong joint for the class of work done at Poplar Bluff, he found that he had to overcome some difficulties which he had not expected, apparently. For instance, the glue when converted had to be of such a body or viscosity that it would flow through the pipes from the mixers to the glue spreaders, and it had to be capable of application by a glue spreading machine. Oftentimes, the glue would be so thick that it would not flow through the pipe at all, and it would have to be thinned down. At other times the glue would be somewhat too thin, so that it would result in a weak joint, and after the glue was once properly applied to veneers it had to be capable of making a proper joint and of setting within a reasonable length of time. One trouble that was encountered in regard to the set was that the glue which he used contained water to the extent that it soaked into the wood, and I believe it soaked to the extent that the retainer bolts were broken. In fact, I saw some of these bolts, if I am not mistaken, in the plant. This was due to the large amount of water which [fol. 675] was contained in the mixture.

As to whether any difficulty was encountered in sending a uniform product to Poplar Bluff in 1905, or whether a uniform product was sent there, I would say there was not a uniform product shipped there in 1905, but quite the reverse of that. The material shipped there, as I mentioned before, consisted of numerous lots of material which had been made for the purposes I previously mentioned, and these were mostly—in fact, nearly all of them—were made by processes which differed in some respects. For instance, different chemicals were used on the different batches and different combinations and percentages of the same chemicals were made of different batches. Some processes were run with heat and some were run without heat, and the temperature used varied very greatly. The raw materials used in these batches were not the same. Some batches, as I remember it, were made of cassava starch, I think from the root grown in Florida, and sometimes the batches were made from imported cassava.

As to why Mr. Perkins did not use a single glue formula or process in making these starch bases, Mr. Perkins at that time was unable to make a uniform product for the rea-

son that he had not had sufficient experience. He did not know how to make a uniform product from different raw starches.

Comparing the adhesive that was made at Poplar Bluff in 1905 and 1906, from Mr. Perkins' product, with the Perkins glue we are making today, the material after conversion at the plant in Poplar Bluff was very materially weaker than the product that we are making today. No such strong adhesive or joint was required in the barrel head work at Poplar Bluff as is required in the glueing of regular furniture panels such as our customers use today.

Mr. Perkins tried his starch products for glueing regular furniture veneers in certain factories in 1906. He tried his products out and made experiments and tests at the plant of the Frost Veneer Seating Company, at Jersey City, New Jersey, and the plant of the Singer Manufacturing Company South Bend, Indiana. He made trials and tests at the Frost Veneer and Seating Company plant for quite some time, as I remember it, three or four weeks, and the result of this was that the Frost concern was not satisfied with the work turned out by Mr. Perkins' adhesive and he removed all his apparatus and material from that plant. [fol. 676] Mr. Perkins went to the plant of the Singer Company at South Bend, Indiana, in the summer of 1906. He did not then start right in using his glue at the Singer plant in South Bend. He found when he started in at the Singer plant that the class of work there was considerably different from anything that he had done up to that time, and he was working on the designs of some new glue equipment, and this equipment, as I remember it, was delayed in arriving at the Singer plant. He did, however, ship a machine, I believe, one spreader, from Waltham which he tried out at some time prior to the receipt of the machinery I have just referred to as being worked on and designed by him. He first got a fair start at this Singer Company in South Bend in the fall of 1906. As to the nature of the equipment he was designing, he was working at that time more particularly upon the glue spreader. This was simply a spreading machine for applying the glue to the work in the Singer plant, or, in fact, in any plant. I think he had to have special mixing tanks for this work at South Bend. I think that the original tanks started out

with in the South Bend plant were quite small tanks, and I know that they built some much larger tanks which, according to my recollection, were made in Chicago some place; I don't know where, and it was the delay in the receipt of these tanks which held up the work.

As to whether Mr. Perkins' glue worked out all right at the Singer plant, it was not until about a year after the fall of 1906 that it was permanently satisfactory and in such shape that Mr. Perkins felt he could leave the job.

The difficulties Mr. Perkins had consisted in getting a glue base which had the adhesive qualities required into such shape that it could be handled practically on the work there, and under factory conditions generally. Mr Perkins had made a great many laboratory tests, worked on the larger batches for other uses, but the work at the Singer plant was of such a nature that the products he had worked out up to that time were not satisfactory, and his method of converting them and getting them into liquid glue, getting them in such shape at the same time that they would flow properly, save trouble, would spread properly and set and dry properly,—and oftentimes Mr. Perkins during the first year with the Singer plant got batches of glue converted which would work all right during the day on which they were brought across or converted, but the next morning they would be thick and heavy and gobby, and would not flow [fol. 677] through pipes between the mixers and the spreader, they would not spread properly nor set properly. Some batches, on the other hand, would go too thin, and he found that it was necessary to try out several different methods of converting or bringing across the glue base, with varying percentages of solvent, and he tried out several chemicals which he attempted to mix in with the glue with the idea that it would make the glue set quickly.

I am talking about matters now which Mr. Perkins told me about and about which he wrote me a great many letters at the factory. During all this time at South Bend Mr. Perkins was working there, he wrote me at least an average of one letter a day, oftentimes two or three letters, and sent me a great many telegrams telling me what troubles he was experiencing in his work there, and asking me, on batches which he directed me to run in the factory for that work, to make certain changes, and in order to direct me in what

way to work on these changes, which direction to go, thicker or thinner, or in regard to the glue base used, he explained very fully to me in these letters all of the troubles that he was having. I was in the factory in Florida at that time. He was in the Singer plant at South Bend trying to use the goods and he was having these troubles with them. This was all what he wrote to me and told me and I made, I think—I know I made one and I think I made two trips to the South Bend plant. He had me go up there at least on one occasion to show me troubles that he was having, with the view that I could go back to the factory and possibly better it.

While Mr. Perkins was at the Singer plant in 1907, or until the fall of 1907, I was having more or less difficulty at the factory in Florida in making starch bases which Mr. Perkins directed me to make, in getting it uniform. The base of the raw material from which the different batches were started would vary more or less, and any variation in the raw material would mean a consequent variation to a slight degree in the process. Some of these goods were made on an acid process which was not as readily controlled as what we know as a double soda process, consisting in the use of peroxid soda and caustic soda, and we found that we had trouble at one time with our water supply and had to rectify that.

We had trouble by reason of the raw material being different. The variation in the raw material made necessary changes in the process, and if we did not succeed in getting this change of process right or to correspond, the net result or end point of the glue base would be somewhat different. The raw material which we were using at that time was of [fol. 678] a different grade or quality from what we soon learned we should use to make the best product, and much of that raw material had not the original strength or the native strength in it to make a good wood glue of the character required of it for that purpose, and if the strength is not in its originality it is impossible to bring it out by any means that I know of or ever heard of.

As to the number of different processes we used, why, in the first half of 1907, in preliminary treating the starch under Mr. Perkins's direction, I should say we used from two to three dozen.

As to the financial condition of Mr. Perkins and his company during the years 1905 and 1906, during this period the business of Mr. Perkins was very heavily in debt, and in fact Mr. Perkins drew out of the business barely enough money for his living expenses, and his salary was only drawn by him in part for several years. He put in all of his own money and all of the money which he could borrow. In fact, I myself for one period of six months drew no salary at all, and I advanced nine hundred dollars of my money into the business for pay rolls and local bills at Lake Mary, Florida.

The business was not making any money in 1905 and 1906. I think in 1907 was the first time that we were able to pay the interest as it accrued on the debt and, if I remember correctly, we slightly reduced the debt in 1907 and paid off more in subsequent years, and in 1911 the business paid a dividend of six per cent per annum, which it has paid from 1911 until the present time.

If Mr. Perkins's products were not all right for glueing barrel heads or doing the work at the Singer Company in 1905 and 1906, then as to why could not or did not Mr. Perkins test it out first in the laboratory instead of shipping it in such large quantities to those places, I would say Mr. Perkins made a great many laboratory tests with that end in view, but it was impossible to develop the process and make final tests that were required of the glue any place else excepting in a wood-working factory or plant where the actual conditions existed. For instance, in the laboratory test as compared to the actual requirements of the glue, the glue had to be of such a nature that it would set properly in large bales or bundles. Different sized panels were used, and they had to be of such a nature that it was fitted for all of the different woods that were used in any one wood working plant or for different classes of work carried on in any one woodworking plant, and it was impossible to tell [fol. 679] in the laboratory in small tests whether the joint which was made on a small veneer would stand the strain of being machined or planed within the time that would be given for it to set in the plant, and on small samples it would often show up a good joint but on a great many large panels set up in bales there would be moisture present

which could not get out of these retainers, and the result would be entirely different from what would be indicated in the laboratory test.

As to judging the flow and spread in the laboratory tests, there was no sure way at that time of testing the flow and spread as it would be carried out in actual practice in a plant. I might add to that, that it was impossible in any laboratory to reproduce the factory conditions in very many respects.

As to whether we find that the glue sometimes works somewhat differently in large batches than it does in small batches, that trouble has been found. So I would say we could not definitely tell from a small mixture whether or not we would get the same result with a large mixture. It was impossible to tell though from any ordinary laboratory batch just how that same goods would work out in the factory when made up in batches of from two hundred to a thousand pounds of dried glue base to the batch.

Regarding Mr. Perkins' products not being satisfactory in 1905, 1906 and 1907, at the Poplar Bluff plant and at the Singer Company plant in South Bend, as to how it was that these people would take such large quantities and pay him for them, well, in regard to the Poplar Bluff plant, Mr. Perkins obtained a letter of introduction from a friend of his, to Mr. L. M. Palmer, who was the manager of that plant at that time, and as a result of this letter Mr. Palmer agreed to allow Mr. Perkins to go to Poplar Bluff and test out his product, and some time after that Mr. Perkins was very badly in need of money to carry on the business and his work, and he told Mr. Palmer this fact, and Mr. Palmer agreed to allow him to ship to Poplar Bluff a very large supply. I was not present and did not hear the conversation. Mr. Perkins told me and Mr. Palmer told me. I know of my own knowledge that the business was in very urgent need of money to carry it on.

Mr. Palmer took large quantities from the company of this adhesive. As to whether he took more than was actually required at the Poplar Bluff plant, he took a supply sufficient to run him (based on the approximate amount of glue base used); an amount that was sufficient to run this [fol. 680] plant in the neighborhood of a year. I think

they used some of the glue in 1906 that had been shipped in 1905.

As to why the Singer Company took such large quantities in 1906, or whether such large quantities were necessary to satisfactorily test the material at the Singer Company plant, I can say that a large quantity was necessary to satisfactorily test the material.

In all of my experience I have never heard of any other glue, except animal glue and this vegetable glue, which would be suitable for glueing up furniture veneers. I am familiar with casein. Casein will not do this work.

Coming back to the shipments to Poplar Bluff in 1905, some of the starch products which were shipped there in 1905 had been at the time, or just previous to the shipment, mortgaged. It was a very large proportion of them, of these 1905 shipments, that had been mortgaged. They were mortgaged to their full value.

Cross-examination:

As to which were the processes employed by the Planters Company and Mr. Perkins in 1904 of treating starches to make sizing for the various purposes which I have mentioned, we used some different processes for different purposes. They were all processes for the degeneration or modification in some manner of starch, as I remember. For the various purposes we tried to degenerate to different degrees. As to the various processes which we used for this purpose, we tried it out, according to my recollection, I cannot remember all of the processes at this time—the use of sulphuric acid at varying amounts and hydrochloric acid with and without any heat. We tried varying percentages of the acids. We ran heat different lengths of time. We tried out the use of bleaching powder, sometimes alone, sometimes in combination with acids or alkalies, sometimes with heat, sometimes without heat. We used permanganate of potash to some extent, tried different combinations with that with other chemicals. Tried the use of peroxid of soda, caustic soda, with heat and without heat. There were Sundry other combinations which I cannot remember now.

As to the combination of peroxid of soda and caustic soda, according to my recollection, we did some work on

that in 1904. I cannot remember what the proportions were that we used. We sold the products of some of these treat- [fol. 681] ments in 1904. A great deal of it was experimental; some of it, I should say, was experimental.

As to our output in 1904 of sizing materials and things of that kind, it is pretty hard to say from memory. According to my recollection, possibly two hundred thousand pounds or less. As to our output of starch, I cannot remember what the output of starch was; probably about the same amount; possibly a little more or a little less. At that time we were using some starch of our own production and some that we bought. I cannot recall about what proportions we bought and what we produced.

As to what treatment we were subjecting starch to in the early part of 1905, which we shipped to Poplar Bluff, that portion of it that was treated at the Lake Mary factory was put through a number of different treatments, that is, different batches, I would say, were treated differently, but just exactly what treatments were used on those particular shipments, I cannot state from my memory. On some of the batches I should say sulphuric acid was used. I am quite sure that all the batches were not treated with sulphuric acid. As to those batches which were not treated with sulphuric acid, they were treated with hydrochloric acid; I believe in one instance nitric acid, but on the latter I am not positive. I would not want to state from my memory that all this material that was treated at all that we shipped to Poplar Bluff was treated either with sulphuric or hydrochloric or nitric acid. We kept a record of the treatment of the batches at that time. I have a good many records; I don't know whether I have a record of those batches, those particular batches, or not. We had not as complete a system at that time of showing where particular batches were sent as we have today, of course, but at the same time we have some records as to where particular batches were shipped. I have these records in the city here.

As I said in regard to shipments in 1905, at that time our records were not as complete as they are now, but I will endeavor to find the records covering all of the lots referred to as far as possible. They are sheets of paper about so long and so wide (indicating), and from one to

three or four sheets on some batches; each batch or lot of goods which was run in the factory. I made probably the most of these records myself at the time the goods were being run. They will show quite fully what the treatment was at the factory of those runs or whether, as in some cases, raw starch was shipped, they may show that. I am not sure whether they will or not.

[fol. 682] As to how the material shipped to Poplar Bluff, which was untreated starch, was marked, I do not remember positively how the material was marked. It was marked with some figure or number to distinguish it, but I do not remember the exact mark. It may have been H. We marked goods, I remember, H. We marked them L, and some that were marked HM. I expect probably the raw starch was marked H because HM was put in to denote that it was a heavy body glue which was modified, so that the H probably stood for the raw starch. At that time we were shipping raw starch, the raw starch slightly modified and a starch which was more modified. These starches were shipped in separate bags.

As to how the starch marked L differed from the raw starch, whereas the raw starch had been put through no treatment whatever, the goods marked L had been put through quite a severe treatment in order to reduce the body very considerably. As to how this treatment compared to the treatment to which we had been subjecting material designed for sizings and the like, if I remember, it was quite similar. In some cases I believe it was carried further and in others not so far, quite, as some of the sizing material was originally made.

Lots of goods which we made up at Lake Mary in 1905, that was carried further. That was done intentionally, except in the case where the treatment would get away from us and would go too far, and the material which was not carried quite so far, that was also intentional. The HM material was more slightly modified still.

Starches of these several kinds were shipped to Poplar Bluff, say, in the spring of 1905.

As to how often I was at Poplar Bluff in 1905 and 1906, I do not remember the date during 1905 and 1906 now, but I think I was there once in that time and either twice in those years or again in 1907. I cannot remember now

the dates. I believe I was not there during the first half of 1905. I may have been there during the second half of 1905. I do not recollect whether I was or not.

I recall that in March, 1905, the contract was closed with L. M. Palmer for the shipment and purchase of starch at the Poplar Bluff plant.

I have been in the plant of the Singer Sewing Machine Company at Cairo, Illinois.

Part of the goods shipped to Poplar Bluff during the early part of 1905, if I am not mistaken, some goods had been shipped there which had not been treated with acids of any kind, but which were still modified. I cannot re- [fol. 683] member now what was the treatment to which those goods had been subjected. It would, I think, be in these papers. I was going to say that I thought those records would show what that treatment was or is.

According to my recollection, there was not any of the glue which was shipped to the Poplar Bluff plant during 1905 marked Perkins Veneer Glue. As to an invoice dated January 13, 1905, in which it states "54 bags of Perkins Veneer Glue," well, that was simply a method of billing out the goods, a name used in billing and shipment out, but it does not follow at all that that or anything similar was stenciled or marked on the bag in any way. I do not remember that any goods was so marked on the bags.

The glue which was invoiced as Perkins veneer glue, as to whether this was both a raw and a treated material, I cannot remember as to that. A considerable portion of the glue which was shipped to Poplar Bluff was sago flour and a little goods made from corn starch. I believe the corn starch was treated with acid and heat. It was a similar degeneration product.

As to the solvent which was employed at Poplar Bluff for dissolving the glue material sent there, caustic soda was used as a solvent a large portion of the time, and Mr. Perkins tried out other solvents. He wrote and told me, but I do not know what they were.

When I was there in 1905 or 1906, at that time they were using approximately seven per cent of caustic soda, I believe. I cannot remember whether they were treating starch by first drawing water into a tank, then adding the starch and stirring it and then forming a solution of this

caustic soda and water and adding the solution to the suspension of the starch in the tank. In making tests at that time at the factory we would put a certain per cent of solvent consisting of caustic soda into the glue base that was suspended in the water, and sometimes we applied heat and boiled it and tested that way, and sometimes we brought the batch across with the action of a less per cent of solvent and heat, but not to the boiling point. I did not mean to say that we used less solvent when we treated it below the boiling point than we used when we treated it at the boiling point. At that time we did not make cold bursts. According to my recollection, we made no cold bursts—I guess we did, at that time, too, making the cold burst. In doing this we simply suspended the starch material and added a solvent until we brought it across. We tried varying proportions from, as I remember it, two to eight parts of water. Mr. Perkins did most of the test-[fol. 684] ing on that and I cannot say further with regard to that.

As to the shipment of starch materials during 1905 and prior to November, 1906, to other veneer or wood working plants besides the Poplar Bluff plant, some material was shipped to Plymouth, North Carolina, to the Wilts Veneer Company. During this period no other shipments were made to any other company or individuals, for this purpose, except those I have mentioned previously and goods shipped to Cairo, Illinois.

Referring to my testimony that we had difficulty in controlling the extent of treatment or degeneration to which the starch was subjected at our plant at Lake Mary in 1905 and 1906, prior to November, 1906, the over treated batches were used up by the addition of slightly larger proportion of raw material. The under treated batches were used up by the addition of material which had been rightly treated, or sometimes material which was treated too far. Oftentimes we mixed mixtures together in the factory which had been over treated and under treated. I believe we shipped to Poplar Bluff during 1905 approximately three hundred thousand pounds of material; that is simply from memory; it might have been more or less. I should say approximately one-third was under treated and

two-thirds treated in some manner or other. I cannot say as to what proportion of the treated was the light body or more completely treated starch. I could not give any idea whether it would run one-third or a quarter, because from my memory I cannot give that.

Referring to my testimony in regard to the Singer plant at South Bend, and that we got a "fair start in the fall of 1906," Mr. Perkins, if I remember it, actually got down to work there in September or October of 1906. I mean that he got a fair start in September or October in making these trials and tests.

At the present time the Perkins glue is all used in furniture. It is all used in furniture factories. I would say furniture and kindred classes of work, kindred uses, such as pianos, pianolas, sewing machines and things of that kind—all furniture, in a way. Strictly speaking, I suppose a door is not part of the furniture of a house. A great deal of our glue is used for door work.

As to our method of introducing our glue into a factory, we send a glue mixing kettle and glue spreader to our customer's factory, and also a man to start them in using Perkins glue. This man remains with the customer to show him about the use of Perkins glue, usually about ten [fol. 685] days, till he feels that they can mix the glue up; that they understand the necessity of keeping the equipment clean, weighing out their proportions properly and adjusting the spreading machine so that it is all right. We keep no one man to go to these factories again in case there is any trouble, but in case of trouble we do send somebody to the plants and in ninety-nine cases out of a hundred we find that the glue is the same as it always has been and perfectly all right, but there is some local trouble in the factory in regard to their stock or something of that kind. I mean the wood they are treating.

As to whether we ever have any trouble with the machines breaking down or not working properly, why, the machines break down, yes, the same as any machine will. As to the cause of the glue not working properly where the stock is at fault, the stock is sometimes too damp, wet. It is sometimes very badly buckled. As far as veneers go, sometimes a veneer is dried flat and straight and sometimes it is not; and on coarse stock, when that is glued up there are

times when coarse stock is of different thickness due to their planers will be thin on the edges or on one end, and if stock is not of about the same thickness all over they will have loose joints, loose edges.

The Lincoln Furniture Company in Philadephia were customers of ours for a year or two, up to within two years ago, probably. The last information I had they were now using glue that they had bought from the defendants. I believe it was during the summer or possibly in the fall that I had this information.

We did try to introduce our glue at Hood & Wright Company, at Big Rapids; we did not get the business. I believe we put in a machine and demonstrated the glue to them. I believe it was in 1909 or 1910. I am not positive. I do not know what the exact reason was why we did not get the business, any more than they did not want to go into it; did not want to take up the use of it. They thought it was not satisfactory for their use, I suppose. At the time prior to our coming in they were using hide glue, I believe, or animal glue. I do not know what glue they are using now. The purpose for which we tried to introduce our glue there was for veneers.

We did also try to introduce our glue at the Hobart M. Cable Piano Company and were not successful in so doing. We did introduce our machine and demonstrated the glue to them in 1910 or 1911, I should say. As to why our tests were not successful there, I had a letter from the Cable people saying that the glue was a success and, if I am not [fol. 686] mistaken, the number of pianos that they glued up and shipped out with our glue was fifty at that time. And they had, according to my knowledge, never had any complaint from those pianos at all. And the manager of the business told us that for other business reasons, which he did not want to explain to us, he would not go on and use Perkins glue in his factory. I do not know what the business reasons were. I do not know what they are using there now.

As to the Votey Organ and Piano Company, we shipped machinery there and made demonstrations. I think it was along about the same time. We did not get the business at that time. I do not know what their reason was. I do not know what kind of glue they are using now.

As to whether we make some form of contract to try the glue without expense to the customers, we have a similar contract to that, yes, and in the cases to which I have referred we probably made that kind of a contract. I know we did in some of them.

As to giving a rough idea of how many test sheets there are covering the processing done on the lots shipped in 1905, there would probably be fifty lots involved in the different shipments, so that I would expect somewhere around fifty or sixty sheets, if we can connect up the shipping records with the lot numbers. Those are the ones that I propose to look for and bring here. As to why is it that they are mixed up with other papers, well, as I stated in my testimony our system of keeping a record of the shipments in the different lots was not as complete by a great deal in those days as it is now, and I will have to locate, first, the lot numbers which went in these shipments. If it was just a question of picking out certain lot numbers, I could do that quickly. Now if you can give me the lot numbers I will pick them out for you in ten minutes.

Cross-examination resumed January 20, 1915:

(The papers referred to are handed to defendant's counsel.)

The treatment to which we subjected raw starch at our Florida plant did decrease its water absorptive properties in the sense that to render fluid a finished glue comparatively little water would have to be added.

At the present time we do keep a record of the processing of our material. The twenty-three hundred or more records, of which I spoke yesterday, include the records substantially down to the present time. As to what was done [fol. 687] with them 1905 and 1904, after we treated our processed starch to reduce its water absorptive properties, I do not know what all was done with it to produce various properties. I am not even sure I understand exactly what is meant by the water absorptive properties. As to whether the processes render it possible to get a more liquid glue without adding an undue quantity of water, why, it may have been sometimes, but I am no chemist on that.

A good dead of the starch which was shipped to Poplar Bluff in 1905 was processed in 1904. After we had

processed the starch some of it was shipped to customers as soon as it was made, but a great deal of the goods made was put in a warehouse, was put up as collateral for a loan and later shipped out to Poplar Bluff. Several different parties loaned Mr. Perkins the money on the goods. The names are Mr. George C. Clark and Barnett National Bank, Jacksonville; Mrs. H. D. Kendall, one of Mr. Perkins' aunts; and possibly others, I do not remember. Mr. Clark was not related to Mr. Perkins in any way, nor was anyone connected with the Jacksonville Bank I have mentioned. Some of these goods were covered in this way also by the First National Bank of Sanford, Florida, if I remember correctly.

We made a test of each run after it was completed. Just boiled it up to see what the body and viscosity of the goods was; referring now to the goods that were made in 1904. Those goods were boiled up to discover what the viscosity and the color was and the body. They were boiled up, certain proportions of treated starch in water and were put into what we call spot plates; and on laundry starch, as I remember it, we used the viscosimeter to get the viscosity of the goods. We used a viscosimeter which was similar to the viscosimeter which we use today. It was a rougher instrument, did not register probably the same by considerable. The laundry starch was supposed to be a thin boiling starch; that is what we tried to make. Sometimes it was thin boiling and sometimes it was not.

Q. I note among the records which you have produced that there are certain sheets marked "Process Record" and others "Test Department. Wet Test from Process." Under the heading "Method of Test" I note the letters DJ. What kind of a test was referred to by these letters?

A. A test is a double jacketed kettle heated by live steam. [fol. 688] Q. And on other of these test department sheets under "Method of Test" I find the letters LS. What do those letters signify?

A. If I could see that I could tell you, I think. (After looking at record) That referred to live steam. LS it is.

Q. That is what I tried to say. Under this test marked LS I notice the words "Ratio of test 9:1." What does this mean?

A. It means that nine parts of water were used to one part of starch.

Q. And the viscosity in the sheet dated 10/16/04 is given as 17-17. What does that mean?

A. That was the result of the test by the viscosimeter.

Q. And under "Condition when cold" I find the word "liquid." Does this condition when cold refer to the condition of the glue after it has been dissolved in this ratio of nine to one with live steam?

A. Yes.

Q. And "Condition cold after 72 hours" refers to the same material after it had been allowed to stand that length of time, does it?

A. It does.

Q. Have you any means of identifying the process to which the goods specified in Brooklyn Cooperage invoice No. 1, dated January 13, 1905, were subjected?

A. No, I have no means of identifying any lot with this invoice and the goods shipped under it. I notice on this invoice it calls for three barrels of No. 3 glue. That is something I never heard of, something that Mr. Perkins was using. I do not know what it was; nobody else knows. And the other goods was some of this starch degenerated material that we have been referring to, just which lots I have no way of determining.

Q. Please look at the other invoices dated up to August, 1905, inclusive, and state whether you have any means of identifying the treatment to which the starch referred to in those invoices was subjected, those invoices or any of them?

A. You mean all the invoices as a whole or——

Q. Just up to 1905.

A. I understand that, but you mean all these invoices as a whole or any one particular invoice?

Q. Particular invoices. I will ask you the other next time.

A. I find nothing on these invoices to connect them up with any particular lot.

[fol. 689] Q. What, if any, means have you for determining what lots were shipped to Poplar Bluff during the year 1905?

A. I have an original letter which I wrote Mr. Perkins, dated December 15, 1905, in which I gave him a list of the lots shipped up to that time. This list was taken from the records and memoranda which I had in my possession at that time.

Q. These are the lots shipped only to Poplar Bluff, are they? They do not include material which was shipped to other points?

A. Some of the portions, or I should say, portions of some of those lots on the list were shipped to customers for use as laundry starch or size of some kind; quite a few of them were.

Q. Then you are unable to determine from this letter, are you, which particular batches were shipped to Palmer and which were shipped to other customers?

A. No, that is not correct. All or a large portion of each batch, each lot number listed in that letter, was shipped to Poplar Bluff.

Q. I note in the opening of this letter you state:

"As near as I can make out the following numbers go to make up the last 250,000 lbs to Palmer."

Then in pencil I note: "Per old invoice book."

Mr. Macauley (continuing question): Per old invoice book we shipped L. M. P. about 320,000# from start to December 15, 1905. Who, if you know, put this notation on this letter?

A. I put it on. That is my writing.

Mr. Macauley: When was this put on do you recall?

A. No, I do not.

Q. From what source did you get the information contained in this letter?

A. From the records that I had in my possession at the time, and memoranda that I had in the plant.

Q. Do you refer to the records which you have brought into court this morning?

A. I understood your question to refer to those records, yes.

Q. Well, you were referring in your last answer to these records here?

A. I was.

Mr. Macauley: It is requested that this letter be copied in extenso in the record.

The letter referred to is in words and figures as follows, to wit:

[fol. 690] "Planters Manufacturing Company, Lake Mary

December 15, 1905.

"DEAR FRANK: As near as I can make out the following numbers to make up the last 250,000 lbs. to Palmer.

(In pencil:) ("Per. old invoice book we shipped L. M. P. about 320,000# from start to December 15, 1905.")

"#80—re-bagged G. T. A.

#75—re-sieved G. T. A.—H. C. L. Heat to 55 degrees, 1,196 Bi-carb, Na OH, Na_2O_2-V. 4:-25.

#74—Reg. cassava.

#72—Re-sv. G. T. A. B. P., H_2SO_4, Blue V. 9:1-15.

#71—Straight G. T. A. Na_2O_2, NaOH, V. 9:1-20.

#69—Reg. cassava.

#68—Resieved G. T. A. B. P. H_2SO_4, HCL, Na_2O_2, NaOH, V. 9:1-20.

#67—Regular cassava.

#67—7 Do. Regained.

#66—Re-sieved, G. T. A. HCL, H_2SO_4, Mg. Carb. V. 9:1-15.

#63—Re-sieved G. T. A. HCL, H_2SO_4, $K_2Mu_2O_8$, H_2SO_4, Mag. Carb. V. 9:1-5.

#58—Reg. Cassava. HCL, H_2SO_4, $K_2Mu_2O_8$, $Mg.SO_3H_2$-SO_4, V. 9:1-5.

#55-5 or #56. Re-sieved G. T. A. Carb. of Soda, HCL, H_2SO_4, V. 4:1-30.

#35-7. I sent you this record over a year ago.

#76—Re-sv. G. T. A. HCL. Bi-Carb. Heat 55 degrees C. 9-1-18.

#77-1 Na_2O_2. V. 9:1-103.

#25 CaOCL, H_2O_2, $K_2Mu_2O_8$, H_2SO_4, Ammonia, V. 10 oz: 1 gal. 21.

If there are any more lots you want the V. on and you will tell me the numbers I will give them to you.

(Signed) J. B. B. S."

Mr. Macauley: I note that in the opening paragraph you refer only to the last 250,000 lbs. sent to Palmer. Have you any way of identifying the process to which the first approximately 50,000 pounds were subjected?

A. I think you have all those records, right in that file there. I found last night reference in some carbon copies that I had to three other lots, or possibly four other lots, which you will find in that file there. Process records which are not enumerated on this list.

Q. And then they complete the 300,000 or so of pounds that you sent?

[fol. 691] A. That completes the 300,000 or 320,000 pounds. I think you will find three or possibly four records in that binder which are not listed here.

Q. Now I find in this letter on #80, "Re-bagged 1,198 G. T. A." To what does the number refer, and also what do you mean by "rebagged G. T. A.?"

A. That was cassava flour known as G. T. A., which was taken out of the original bags and put into others.

Q. And #80 refers to the record which you have here, does it?

A. #80 is the lot record, yes, referring to corresponding process record which you have in the binder there.

Q. And each of the numbers at the beginning of each of the lines of this letter refer, do they, to the lot numbers of the record sheets which you have brought in this morning?

A. The numerals on the first of each line refer in that way, yes.

Q. I notice opposite the numeral 75, "Re-sieved G. T. A. —HCL Heat to 55 degrees, Bi.carb. NaOH, Na_2O_2, V. 4:1-25." Will you please explain what these notations mean?

A. Those on lot number 75?

Q. Yes.

A. And you want to know what all the notations mean?

Q. Yes.

A. The "re-sieved G. T. A." according to my recollection, without referring to the record over there, means that flour used there was cassava flour known as G. T. A. brand, and it was re-sieved or passed over a sieving device for the purpose of getting the meal out of it. "HCL" stands for hydrochloric acid, and is mentioned to show that that acid

was used. "Heat 55 degrees" is to indicate the temperature.

Q. Just to indicate the temperature at which the process was carried out?

A. The temperature at which the process was carried out. "Bi. carb." means that bicarbonate of soda was added somewhere along the process. "NaOH" refers to caustic soda used in the process. "Na_2O_2" refers to peroxide of soda used in the process. "V. 4:1-25" means the viscosity at four to one (portions of starch and water) was a viscosity of 25. Now, I don't see what bearing that has got on the case however. That has got nothing to do with wood [fol. 692] glue, and was never expected to be used for wood glue or anything of the kind. You want to remember that all those records and all these things that you are talking about here are referring to sizes and stuff that was made for sizes of some kind or other, or laundry starch.

Q. But they were sent actually to the Palmer plant?

A. Yes.

Q. For use as wood glue?

A. Yes, after a year or so. They were sent there and used up in several dozen different ways, I guess.

Q. In the following line I find the words: "Reg. Cassava." What does that expression mean?

A. According to my recollection that meant that that was cassava starch made in Florida from roots grown there. Regular cassava starch, which had not been treated or modified in any way, unless it was a very slight amount of blue stone, or possibly in some cases a half pint of a weak solution of caustic soda, to make the fibers separate. It had nothing whatever to do with the treatment.

Q. Will you please read the next line and say what it means?

A. Lot number 72. "Re-sv. G. T. A." Is the same reference which I explained where it occurred in lot 75. "B. P." meaning that bleaching powder was used. The initials "H_2SO_4" refer to sulphuric acid used. "Blue" refers to aniline blue which we put with laundry starch to try and give it a good color. "V." is viscosity. "9:1" is proportion of nine parts of water to one of starch. And "20" refers to viscosity.

Q. That is, this "V. 9:1-15," means that under the particular viscosity test that you employed a mixture of nine to one of water and starch gave a viscosity of 15, is that right?

A. "V. 9:1-15." means that the starch was tested with nine parts of water to one part of starch, and that the viscosity of that test showed 15, which is lower than the water test. Water would only register 16 on that viscosimeter at that time, so that the body of this material was thinner than water.

Q. The symbols which you have explained above mean the same thing throughout this letter, do they?

A. Wherever this same symbol occurs it refers to the same chemicals.

Q. "Straight G. T. A." I presume, means untreated G. T. A., doesn't it, in this letter?

A. If I could refer to the record I could tell you better. What is your lot number?

[fol. 693] Q. 71.

A. No, it refers to G. T. A. unsieved, because the lot record shows that this batch was treated with chemicals.

Q. Now, in this letter, for example in connection with number 75, to which you have referred, where you refer both to hydrochloric acid (HCl and Na_2O_2), does that mean that both of these reagents were employed on the same batch of material, or that the lot was divided into two batches?

A. It means that both of those chemicals you inquire about were used on the same starch, on the same batch. The batch was not divided and these chemicals used separately, but all of these chemicals here which are listed on the different batches were used on the same batch of starch for treatment.

Q. I call your attention now to one of these process records to which you have referred, to wit: record of lot #71. I suppose where the same symbol is used in these records it has the same meaning as in the letter to which you have referred?

A. It has.

Q. "Tank #10" indicates the tank in which the operation was performed, does it?

A. In that case, yes.

Q. "Kind G. T. A." indicates that G. T. A. cassava was treated, does it?

A. Yes.

Q. What do the words "Inches of liquor, 53" mean?

A. It means that the liquor in the tank measured 53 inches in depth.

Q. And what does "Density 21" refer to?

A. Beaumé of the liquor 21 degrees. It means that the liquor is 21 degrees Beaumé.

Q. You mean the liquor containing the starch?

A. The liquor containing the starch in suspension, yes.

Q. It has no reference to reagent, of course?

A. None whatever at that point.

Q. Under the heading, "Pounds," and opposite certain initials there are numbers, as follows:

1030 Jax	6510
Na_2O_2	16
NaOH	32
Na_2O_2	

These numerals indicate the weight respectively of the starch, sodium peroxide and caustic soda employed, do they?

[fol. 694] A. They do.

Q. Under the heading: "Time" I find "1:20-7P." To what does this refer?

A. "1" on the line marked "Na_2O_2 16 pounds," under the heading "Time," under which is an "A." This "A" stands for "Am." A chemical was put in at 1:20 and was run until 7 p. m. on that day.

Q. Just go ahead and explain this, will you?

A. On the following line, starting, "NaOH 32 pounds," the chemical was put in at 1:25 and run in until 7:40 p. m. And the following line "Na_2O_2 12 pounds," it took from 10 a. m. to 5:25 p. m. to get these chemicals in. This was the length of time taken to add the chemical to the batch.

Q. And will you please just go on and explain the other matter on this page?

A. "Dropped to number 4" means that the batch was dropped out of number ten tank to number four tank in the afternoon, p. m., which is indicated only by a "P" here, of March the 23rd. The first two chemicals having been

added on March the 20th, and the third and last on March 22nd. The next line, "stirred up A 3/25, 6 1/2" means that the liquor in number four tank was stirred up in the morning of the date, 3/25, to a density of 6½ degrees Baume.'

The next line following down the sheet, "Tabled fine-unsieved G. T. A." means that the starch when run out on the tables acted very well, and that the G. T. A. raw material used was unsieved.

On the line below, "Pumped to tank No. 13. Date 3/25" means that the batch was pumped to the tank with this number on the date indicated.

Next line, "Tabled 3/25" gives the date on which the batch was tabled.

The next line, "Into Kilns 3/27" was the date on which it was put into the dry kilns.

"Dumped to hoppers 3/29" is the date on which the starch had become dry, and was discharged into the hoppers, underneath the drying racks.

"Packed, Date 4/1" is the date on which the goods were packed.

"Pounds, 5,400," is the number of pounds packed.

"Loss 17%" is the percentage of loss which occurred during the process. This loss was on account of over-degeneration, or over-treatment, of the batch.

"Viscosity, warehouse sample 20-21" gives the viscosity of the finished sample drawn from the warehouse after packing.

[fol. 695] "By 9: 1 L. S." means the ratio of starch and water used in testing, and that it was tested by the use of live steam.

"Viscosity sample 55-55 By 4:1," ditto marks under the initials "L. S." above, means, that the viscosity (proportions were four to one of water and starch), was 55.

"Sold to L. M. P. 4/17," means that it was sold to L. M. Palmer on the date indicated.

Mr. Macauley: It is requested that this process record sheet be copied in full into the record.

(Said document was in words and figures as follows):

"Process Record

3/20/05.

Tank No. 10. Record of Lot 71. Date received: ——. Not Sieved. Gross amount from warehouse, 30 bags, 6,465. Kind: G. T. A.

Estimate of sieve loss: Net, 6,510.

Inches of liquor: 53. Density: 21.

When pumped into special dept.: 3/21.

Treated as Below

	Lbs.	Time	Date	Temp.	Dens.
Tank No. 1030 Sax	6510	a	3/20		22
" " Na O	16	1:20-7P	"		"
" " Na_2O_2H	32	1:25-7:40	"		"
" " Na_2O_2	16	10a 5:32P	3/22		"
" " Dropped to ⇌4 P.			3/23		"
" " Stirred up	a		3/25		6½
" " Table fine-unsieved G. T. A.					

Pumped to tank No. 13 Date 3/25

Tabled 3/25

Iinto Kilns 3/27 Temp.

Dumped to hoppers 3/29

Packed, date 4/1 Lbs. 5,400 Loss 17% Moisture

Viscosity, W. House sample 20-21 By 9:1 L. S.

Viscosity, Sample 55-55 By 4:1 "

Loss

Sold to L. M. P. 4/17"

Mr. Macauley:

Q. Will you please explain — the same manner the test sheets which are annexed to this process record sheet.

[fol. 696] A. There are six of the test sheets atached to this.

Q. Why are there a number of test sheets to the one record sheet?

A. Because for some reason or other the batch, in addition to being tested along during the process, or about the time processed, was tested afterward on several different occasions, and part of the tests are made on a nine to one basis, and there is one test on the four to one basis.

The Court: That is sufficient explanation to enable us to understand what the papers mean.

Mr. Macauley:

Q. Is there anything to show when these various tests were made?

A. Each sheet is dated in the upper right hand corner.

Q. What did you mean by the note "Color good"?

A. That indicates that the color of the boil-up test when made was considered good for the purpose for which the batch was originally intended, which in this case would seem to be laundry starch.

Q. From what do you find that the batch was intended for laundry starch?

A. Simply from the general treatment used and the fact that the color was noted, and also the condition when cold was noted which was a requirement of the test made for laundry starch. It is impossible, however, to state positively what all of these batches were originally made for.

Q. This batch was made the 20th of March, 1905, was it not?

A. It was started the 20th of March, 1905, and finished on April 1, 1905.

Q. And it was sold to L. M. Palmer, April 17, 1905, was it not?

A. Yes, it was. That date 4 17 05, however, may be approximate. That might have been the shipping date from the factory. That is the approximate date.

Q. The sheet or process record of lot No. 70 is marked "Sago," by which I presume that Sago starch was there treated, is that correct?

A. Sago flour.

Q. And I also find on this sheet the word "Veneers," what does that indicate?

A. That would indicate that the batch was started with the idea of using it on veneers of some kind.

Q. And this record is also marked "Sold to L. M. P. 4/17," and I presume your remarks with reference to the record of lot 71 in this respect would apply to this sheet, would they?

[fol. 697] A. Yes.

Q. I find that the records of lots 69 and 68 are each marked "Sold to L. M. P." and dated 3/11/05; that lots 72, 74 and 75 are each marked "Sold to L. M. P. 4 17;" and that process record of lot 80 is marked "Sold to L. M. P. 4 18." I suppose that each of these lots were sold to Palmer about the date given, were they?

A. They were, and if you will go through that whole bunch of records you will find that there are not two processes alike in the whole bunch of records, and you will find that the viscosity of these different batches of starch average all the way from the thinness of water or thinner than water to raw starch itself, or untrested starch, and in the whole batch there were three lots started with an idea of using them in some manner as wood glue, and most of these batches or shipments here were made on the same date, and the goods were mixed in every conceivable sort of way in the Poplar Bluff factory and used up after a fashion, and it is no more like the goods that the Perkins Glue Co. is making today and has been making for years past than day is like night. Most of the stuff in here was made for laundry starch and was made for sizing or was made for carpet cop sizing, and you will find two records in there that are marked "Carpet cop sizing," with a viscosity down about that of water, and the goods were so weak that it was built up with regular Florida cassava, which you will find indicated on the records there, to give it strength enough to even build up a barrel head or hold it together.

Q. I call your attention to the fact that the process record sheets, other than those which I have mentioned, none of them state to whom the material is sold, though there is a blank for the purpose: that process record sheet of lot 42 is marked "Sold to H. D. Kendall, New York, 11 19:" that record sheet of lot 43 is marked "Sold to P. M. Company, Boston:" that record sheet of lot 50 is marked "Sold to R. M. Winans;" that record sheet of lot 62 is marked "Sold to W. C. R. Co. and H. C. Co. 2 17;" that record sheet of lot 76 is marked "Sold to Boston." Will you please explain how these sheets happen to be so marked if the material was sold to Palmer?

A. The sheet marked "Sold to H. D. Kendall" was so marked because the goods originally were shipped to the warehouse and stored as security for a loan made by H. D.

Kendall to Mr. Perkins, and were afterwards reshipped to Poplar Bluff. So the record reading "Sold to P. M. Co., Boston, Car No. 4" was stored in the warehouse in Boston [fol. 698] for a time, and may or may not have been put up for security for a loan to Mr. Perkins.

The record marked "Sold to R. M. Winans, 30 bags" indicated thirty bags out of a total of 20,750 pounds, was put in a warehouse of R. M. Winans & Company of New York and later shipped out.

The record marked "Sold to W. C. R. Co. and H. C. Co." indicates that a part of this shipment was made to W. C. Ritchie Company of Chicago for paper box adhesive or mixed in with different material in his factory where he made paper boxes. Part of it was shipped to the Hartford Carpet Company for mixing there in some way.

If I am not mistaken, if there is any further doubt or anything to be cleared up on the question of any of these process records—I have letters which would clear that up, and as I explained yesterday, our records were not complete at this time, and I have picked out what you yourself have proven, and which my letter there proves to be practically complete shipments made to Poplar Bluff. All of the goods shipped to Poplar Bluff at this time or at any later time have been a very different product to what we are making today; and the goods used at Poplar Bluff were in all cases a mixture of starch treated to varying degrees, usually very much overtreated, to which raw starch in varying proportions was added to try and get the strength, but at the same time obtain flow and spreadability. We shipped such material as I have just described to Poplar Bluff Plant up to the very last shipment that we ever made them. The records will show that if you want them to.

Q. What was the date, as near as you can recollect, when you first learned from Mr. Perkins or anyone else of a process which consisted in treating the starch with a two to three per cent by weight of the raw carbohydrate of strong sulphuric acid at a temperature below the bursting point of the starch, for the purpose of rendering the finished glue fluid with comparatively little water for the purpose of using it in the making of a wood joint?

A. I should say, according to recollection, it was the summer of 1907.

Q. And when did you first learn from Mr. Perkins or anyone else of the process of making a wood glue by dissolving starch with caustic alkali to the extent of six to ten per cent by weight of carbohydrate in three parts or less by weight of water, the weight of water being with reference to the weight of the starch?

[fol. 699] A. About the end of 1907.

Q. Are you the same Julius B. B. Stryker who on May 15, 1911, executed an affidavit in connection with an application of Frank G. Perkins, Serial No. 460,737, filed November 2, 1908, which is the application upon which patent No. 1,020,656 the reissue of which is here in suit, was granted?

A. I do not remember the patent number.

The Court: The original patent on which the reissue was granted?

A. Yes, sir, I do not remember the number.

Q. In that affidavit you state: "Prior to July first, 1907, said Frank G. Perkins described to me the process and product as set forth in said application, and I personally saw and helped Mr. Perkins to carry out said process and produce the glue product described therein. Also prior to July first, 1907, I personally saw and helped said Frank G. Perkins test the process and product described in said application, and glue together pieces of wood with glue made in accordance with the process described in said application. These pieces of wood which were glued together showed that the glue produced by said process had a remarkable tenacity, and that the glue was very satisfactory for use in wood joint work." In view of this affidavit do you wish to change your testimony?

A. No, I wouldn't say that I would change my testimony. I was depending entirely upon my memory, and the dates that I had in mind in testifying were, as nearly as I can remember at the present time, the dates when I, from my end of it, realized that the batches, as they were being made regularly in the factory from day to day were on a regular basis. Mr. Perkins was away from the factory practically all the time, and he kept giving me instructions to make changes in the process at the factory, and it was

about the date, according to my recollection, that the process was settled down into a steady thing, which I had in mind. Mr. Perkins gave me instructions time after time for changing the process, and I would change it and make the goods as nearly as I could make them in accordance with his instructions, as I understood he wanted them. And only to find afterwards that for some reason or other they were not right, and have to make further changes. But according to my recollection those troubles ceased at the factory in making large batches, about the time that I give.

Q. And then about the date that you have given, as I understand it, you made a satisfactory glue which was suit-[fol. 700] able for use for gluing wood joints, without mixing it with other materials, or mixing batches of glue of different degrees of degeneration, is that correct?

A. According to my recollection that is correct. About the dates I gave were the dates in which the goods produced were processed first by means of a uniform process, applied to all of the glue base made, which was shipped out and used without further manipulation, as by mixing when it was prepared in the customers' plants.

Q. And about this time you began sending out all the glue, did you, ready mixed, to the customers' plants?

A. Just what do you mean by "ready mixed?"

Q. I mean you ceased to send different grades of glue to the same customer to be mixed up by him?

A. I think that it was about this time that we stopped shipping all of the goods which were to be used or were used in some kind of a mixture of raw bases, and about this time we started in to ship out goods which had been processed at the factory in such a way that when it got to the customer's plant and was put into the form of liquid glue it would flow and spread and have all of the characteristic requirements of good glue. We had made up a number of batches of goods which were not right, and it may be that we shipped out some such batches after the dates I have mentioned, or it is possible that some mixture, in a more or less isolated case, might have been attempted for some other purpose. But I remember that in October, 1907, batch number 183 was put through process, and it was marked in such a way that we could keep special track of it, and after that time we have not changed our process. We have

kept strictly to that process, and all of the goods that we have manufactured since that time at the factory have been made according to that process.

Q. I notice from Brooklyn Cooperage invoice, which is marked "Defendant's Exhibit Brooklyn Cooperage Invoice and Papers, Number 24," and marked "Date of shipment, June 28, 1910," that the glue bags were marked H, and L; 134 bags being marked H, and 268 bags marked L. How do you explain that at this time you were still shipping out two grades of glue?

A. Why, my answer just made *made* referred to wood glue which was suitable for furniture and high class veneering, high grade veneering. I did not refer to the adhesive or the starch material we had been shipping to Poplar Bluff. As I said in a previous reply to one of your questions, we continued to ship to the Poplar Bluff plant for the [fol. 701] purpose that they used adhesives for, adhesives and mixed glue, up to the time that they discontinued buying from us, and I again repeat that that material is not the material which I contemplated in my former answer, nor is it material that we are shipping today to our regular furniture customers, or panel and top customers.

Q. Did the material which you said was marked "H. M." on the bags have to be mixed with raw starch to give a glue of the required degree of fluidity for use in making wood joints?

A. I don't know exactly how Mr. Perkins had mixed those different grades of material at Poplar Bluff. The proportions of each that he used, as a general thing, and the material used there was used with four parts of water to one part of the dry base, and if I am not mistaken that was invariably the case, unless it was in the case of a small experimental batch. And any material with which four parts of water is used is naturally different material from our regular glue base, with which the two and one-eighth to two and one-half parts of water are generally used by our customers at the present time, and for some years past.

I would simply answer the question by saying that the heavy, modified goods such as were shipped there, to give any fluidity at all or be capable of being spread with a machine on any kind of material, would have to be mixed with raw material and some degenerated material which would hold it together. What proportions I don't know.

Mr. Macauley:

Q. Then I understand you correctly, you had to mix this H. M. material with raw starch, and also with some of the lighter bodied material to make it flow properly, is that correct?

A. As I said in my former answer, I don't know how Mr. Perkins made all those mixtures, and my last reply is from experience that I have had from my work at the factory. There is all the difference in the world between making tests at the factory and making them in the customer's plant.

Q. From your experience at the factory did you find that this H. M. material had sufficient fluidity to be applied to wood to form a wood joint?

A. We made so many different things that were marked "HM" that unless you could specify some particular lot which was so marked, I would be unable to answer the question.

[fol. 702] Q. Then I judge that some, at any rate, of those lots which were marked HM could be applied, and some could not, to form a wood joint?

A. No, I wouldn't say that at all. The HM goods that were shipped to Poplar Bluff were shipped there and were used with goods which were marked "L", which stood for "light", and they were sometimes mixed with the raw starch, which is shown on those records. And the whole question of fluidity would depend on any base or any mixture, upon the proportions of water that were used to make the mixture. You might get a good enough flow at four to one on a certain mixture, but at two to two and one-half to one you would get no flow at all, and in all probability you would be unable to get it out of the glue mixer except by digging it out with shovels, or something of that kind. So that when you do not specify what proportions of water to be used, and you refer to the goods marked "HM" in a general way, I should answer your question by saying that a glue suitable for furniture veneers or veneers of that kind could never in the world be obtained from such a base. If this were possible I think Mr. Perkins would have discovered the key to the whole situation before he did, because he worked hard enough to do it, and it was a question of getting a starch material modified in such a way, and not carried too far, but carried on to the point where that

starch material would afterwards be mixed up with two and one-eighth to two and a quarter or two and one-half, possibly, parts of water and still it would retain its natural adhesion of the raw material to the extent that it would bind the wood together and make a joint which is suitable, and which is as good as the hide or animal glue joints which had been made previous to that time. And at the same time this glue had to be capable of flowing and being mixed properly, and being discharged into spreading machines and applied to the veneer. At the same time it had to be so that it would not soak into the wood and spoil the veneers or make "soak" joints or loose joints or blisters.

Q. If I understand you correctly then, this HM material in order to be dissolved up with four parts of water to form a glue of suitable consistency to be applied to wood, would have to be mixed with a lighter body, is that correct?

A. It was mixed with some lighter and some heavier, I believe. As I say, I do not know what proportions Mr. Perkins worked on, or all that he found necessary in this work at Poplar Bluff, but whatever he found there was for [fol. 703] the purpose of use in that plant, and it was not for the purpose of Mr. Perkins' invention as it is known today. Nor was the product as I have said, anything like the product today.

Q. Then your experience does not teach you whether or not it was necessary to add a lighter body of glue to this HM glue in order to mix it with four parts of water and form a suitable glue for application to wood joints, is that correct?

A. Well, for the work at Poplar Bluff there it could have been mixed pretty much any way. As I have shown by these lots here, which you have called for, the goods that were shipped to Poplar Bluff were made in a great many different ways, and they were different mixtures, and what possible kind of mixture a man might have for veneer work, what he might have gone into there with those combinations, I really can't say.

Q. Well, I haven't asked you what they actually did at Poplar Bluff. You have stated that you were the one at the factory that made the tests of this glue. Now you ought to be able to tell whether or not this H. M. glue was sufficiently fluid when mixed with four parts of water to

form a glue applicable to a wood joint. Can you tell us that or not?

A. Do you mean by just taking the H. M. alone and mixing it with four parts of water?

Q. The H. M. alone, and mixing it with the proper amount of caustic soda and four parts of water.

A. Why, how much caustic soda?

Q. Well, say around about seven per cent by weight of the starch material employed.

A. I judge that under those conditions the H. M. goods, as I remember at this time, would come a long way from making the wood joints that I have been speaking about, and I doubt very much if it would have done for our Poplar Bluff work if used alone.

Q. On which side do you think it would have fallen, being too fluid or not fluid enough?

A. Why, from any recollection I suppose it would be rather too fluid. Another thing you must bear in mind is, that the batches made at the factory were made under instructions as nearly as possible, and indications gotten there were test indications only. We were utterly unable or unprepared to make anything like the factory test on anything down there.

[fol. 704] Redirect examination:

Referring to my cross-examination where I stated that I supposed our glue was not satisfactory for the use of the Hood & Wright Company, I meant that it might not have been satisfactory for the reason that the veneer presses they had in their plant at that time were old and antiquated screw presses, and were not capable of giving the required amount of pressure to use Perkins glue. That the people were not inclined to put in modern veneer presses. But they told me that the glue itself was all right, and in fact they have recommended Perkins glue to persons making inquiry from them. They said that the glue was all right.

The shipment to Cairo, of which I spoke yesterday, that was in 1905. Mr. Perkins went there sometime in 1905 and made the tests, built up some panels and made this test, and the people there told Mr. Perkins that they would consider the matter sometime later, and it was more than a year later than this that they again took the matter up.

Referring to the material shipped to the Wilts Veneer Company, at Plymouth, North Carolina, that I believe was in 1905 or 1906. They did not continue to use Mr. Perkins' adhesives. Mr. Perkins was working in their plant, as I remember it, off and on for several months, and the final result was that he quit there, and at their request we took back a large quantity of material he had shipped there, and paid them something like $2,000 for the goods that we took back. The starch base we shipped to the Wilts Company was entirely different from that we are selling today. The material shipped to Plymouth, as I remember, was of much heavier body than we are making today; it required three and one-half to four parts of water to get it into solution so it would flow or spread at all, and inasmuch as so much water was used with it, it would not make a strong joint. It was not even strong enough for the joints that the veneer people were making for box shooks.

As to the business situation of our company during the first half of 1907 with regard to the making of a furniture veneer glue, well, the situation was mostly troubled. The glue that Mr. Perkins was trying to use had proven up to that time not right, and I supposed he had the right thing when he went to South Bend to make the tests for use there, but he would write me one day that the thing was all right, and the next day he would write me that everything was all wrong. He gave me various instructions along about [fol. 705] this time for trying out batches in different ways. I tried them out to the best of my ability, but it was exceedingly discouraging; to the point that I on one occasion resigned my end of the job and later reconsidered it, and decided to go along a little longer. I was, I suppose, disgusted with the proposition. I was certainly discouraged to the point that I was ready to quit, and would have quit a good many times if it had not been that I was working with Frank Perkins.

I refer to the proposition of trying to make glue and the working out of the glue in successful use at that time. We thought a great many times that we had it right, but every time one trouble was overcome it seemed as though at least one more trouble took its place. Sometimes it seemed as though it went backwards instead of forwards.

The company, or the officials of the company, very seriously considered giving up the business of making this veneer glue. At one time it was practically done, but we took a fresh start and held on until the present time.

Referring to lot No. 183 mentioned in my cross-examination, it is identically the same process we use today in making our vegetable glue. We first tried out that process in the factory in October, 1907.

Referring to my testimony in cross-examination of having certain troubles in our customers' plants today, such as veneers being of uneven thickness or wet and not dried straight, etc., these troubles are equally applicable to animal glue. They have always had trouble with animal glue.

Regarding my testimony that when a lot was over treated or under treated, we would mix raw or over treated starch with the original in 1905 and 1906, we did not then know how to make the proportions. It was all guess work. I do not think, if we had the same starch bases here today, or perhaps some of them which we had in 1905 and 1906, that I could get proper mixtures of them with raw to make a fairly good glue. We never got proper mixtures with anything to get a wood glue.

Regarding the shipment to Poplar Bluff in 1905 of Perkins veneer glue, this was entirely different from what we sell for veneer glue today. I do not know why it was called veneer glue at that time. I suppose Mr. Perkins wanted some name to bill it by.

Regarding getting a fair start in the fall of 1906 at South Bend, I meant by "fair start" that somewhere late in the fall was the first time that the proper mixing kettles [fol. 706] and glue spreaders were available and placed in position for use or trial at that plant.

Beginning sometime during 1907, the latter part or so, all of the shipments we made to regular veneer customers were made according to a single or the same process, and the goods we were shipping to Poplar Bluff even long after that were still made differently, or were shipped in quantities intended to be mixed, that is, different kinds to be mixed. We continued shipping different kinds of starch bases to Poplar Bluff clear down to 1910, even although we were shipping our other regular veneer customers entirely different products.

Redirect examination continued January 21, 1915:

Referring to my statement that we have about twenty-three hundred process records running substantially down to date, I mean that we have made about twenty-three hundred lots since about the first of 1904. About twenty-one hundred of these have been used for furniture veneer work. Some of the rest were shipped to Poplar Bluff and for sizing cotton goods and such purposes, and laundry starch.

Referring to the fact that a great deal of goods shipped to Poplar Bluff in 1905 had been put up as collateral, the fact that we had so much of these goods so mortgaged had considerable to do with our shipping them to Poplar Bluff.

The goods had been put up as collateral and the business was in a bad financial way and very much in need of money; and Mr. Perkins went to Mr. Palmer and told him the conditions and got him to consent to allow the shipment of this large quantity of material to Poplar Bluff, and it was so shipped in a few months' time and was sufficient to run them for a year and a half or two years, as it turned out.

Q. But how did it happen that the Poplar Bluff concern or Palmer bought so much starch base in the spring or summer of 1905 if it was not giving satisfaction?

A. Well, Mr. Palmer's headquarters were in New York City and Mr. Perkins saw him there and told him of the situation referred to, and Mr. Palmer allowed Mr. Perkins to make the original tests and ship considerable quantities for that purpose. Mr. Palmer, however, did not know of the difficulties, troubles, that Mr. Perkins was actually experiencing at the plant at Poplar Bluff, and Mr. Perkins tried to work out these troubles as best he could, and without drawing it particularly to Mr. Palmer's attention, as [fol. 707] he did not naturally want to excite Mr. Palmer's fear in the matter in any way.

Q. In one of your answers yesterday you stated that there are not two processes alike in the whole bunch of records relating to the 1905 Poplar Bluff shipments. You also referred to mixing different goods in different proportions. Will you explain a little more fully about these matters?

A. As stated in answer to the question yesterday, the goods shipped to Poplar Bluff during this period consisted

of materials made from tarch or sago flour or made differently, different processes were used on these goods, and the body or viscosity of these different batches was very different. In fact, it varied all the way from the thinness of water or even thinner up to raw starch itself and these batches were mixed up in all sorts of different combinations in order to get material which would flow, spread and even with the four parts of water employed the batches were oftentimes too thick. When any goods is too heavy and as much as four parts of water has to be employed there is very apt to be trouble of this kind. I have known of one instance of goods of this kind resulting in such a heavy, thick and pasty mixture that a shovel had to be employed to dig it out of the kettle in which it was mixed up and converted; it could not be flowed through the pipes between the mixing kettle and the spreader, even.

Q. What were the goods shipped to the Hartford Carpet Company intended to be used for?

A. For sizing of stiffening of cops. This was largely in the order of a size material.

Q. Would any starch base which would require four parts of water to make it spreadable be materially different from your regular glue base with which you use less than three parts of water?

A. Yes.

Q. In your cross examination you referred to obtaining suitable consistency and the key to the situation. What do you understand to be the practical problem that Mr. Perkins had worked out in 1907?

A. I understand it to be discovery of proper means, to in the first place, modify a starch base to a certain defined and recognized point, this modification not being carried too far but at the same time far enough; and in the requirements of the glue using industry the amount of water that could be used was restricted to certain limits, these limits being in most cases around two to two and a half parts of water. To get the proper glue base for this the natural [fol. 708] strength or adhesiveness of the raw material had to be retained to the largest extent possible, and this Mr. Perkins succeeded in doing and his product was capable of use under practical factory conditions in that it could be mixed in required quantities and would flow readily and as

required from mixing kettles to the spreader. They were capable of being applied properly. At the same time the product, as he worked it out finally, would set properly and would not soak on the veneers.

Q. Referring to the Poplar Bluff shipments in 1905, were all of these goods which you shipped there in 1905 which had been very much degenerated intended to be mixed with raw starch or starch that had not been sufficiently degenerated to stick the barrel heads together?

A. Yes.

Q. Three of the many process records you have produced relating to 1905 Poplar Bluff shipments have on them the word "Veneers." You have stated in cross examination that this indicates that these processes were started with the idea of using them on veneers of some kind. What kind of veneers did you mean and did the word veneers have the same significance then as it does today to you?

A. We had in mind the making of barrel heads, which is indicated, I think, by the record referred to, and these barrel heads, in fact, were the only thing about which we knew in this line at that time; and the word veneers or veneering today in my mind does not have the same significance, as it had at that time, for the reason that speaking or thinking of veneering today I have in mind the veneering industry as applied to making furniture or doors or sewing machine tops and things of that kind, and I believe that this is the meaning generally given to the use of the word today in the trade generally.

Q. When was it Mr. Perkins died?

A. He died in September, 1910.

Q. What are the advantages of your present process of treating the starch in the first step with caustic and peroxide of soda over the acid treatment for degenerating starch?

A. The advantages of the alkaline process over the acid process referred to would be summarized as follows: The alkaline process is more easily controlled than the acid process, the latter having to be held to more closely confined limits for the reason that slight overtreatment or undertreatment by this process results quite seriously in the finished glue product. The alkali treatment is a somewhat better treatment in view of the fact that a more uniform [fol. 709] product can be obtained and the dissolving up

or second step of the process when applied to the alkaline processed goods works somewhat better in that the finished base made by the alkaline process seems to take somewhat more kindly to the subsequent second step of treatment where the solvent is added in a more or less varying proportion.

Q. What do you mean by "take somewhat more kindly"?

A. I mean that the subsequent addition of the solvent in the second step as carried out in the customers' factory will tend to give more uniform result, as in case the base has a more or less akaline reaction the solvent would act on the base better than in the case of acid made goods which through an error or oversight might be left a little acid at the end, such an acid reaction in the customers' plants when the second step was applied would be quite apt to throw off the action of the solvent used when the glue was converted.

Q. Does one mix any easier than the other?

A. The finished base made by the alkaline process will dissolve somewhat more radily when mixed in the second step than the acid made base; and the more readily the base can be dissolved and with the minimum chance of going wrong or delay in the operation, of course is very desirable.

Q. Why is it that the alkali or double soda process is more easily controlled than the acid process?

A. Well, when the required amount of the chemicals used for the purpose of modification in the alkaline process are employed at the outset, the question of the modification being carried too far is not so dependent upon the question of time of treatment as applies in the acid process. After the chemicals of the alkaline treatment have done their work the stirring could be kept up for a longer period, but in the case of the acid and heat treatment if the quantities of acid first employed were correct the question of time is a most important one, in that if through any error or oversight or inability to stop the action of the heat and acid at the required point the resultant modification of the base would be carried too far.

Q. There is testimony in the case, I believe, that about 1909 you shipped goods to the Poplar Bluff concern all in one bag. What was that? What were those goods?

A. About that time the goods referred to consisted of 183 goods, sago flour and raw starch mixed dry in the bags at certain proportions of each. These were mixed at our factory.

[fol. 710] Q. Prior to the time you started sending them this mixture what did you send them?

A. We had sent them all sorts of things, lots or batches made by different processes, processes some of which were carried out very, very low and some of which were carried not so low. Others were less modified still. Other lots were Florida made cassava starch and others were imported cassava flour or starch. They were made in all sorts of ways and consisted of the starch referred to and sago flour.

Mr. Crosby: Q. After 1906 did you ever ship this Poplar Bluff concern starch products which you had made for entirely different purposes but which turned out to be unsuited for those purposes, and if so, to what extent?

A. We did make such shipments and to a considerable extent. I should say, of the balance of the material we shipped them.

Q. What were these materials made for; that is, what were they intended for when you made them or started to make them?

A. Sizing, paper box adhesive, and I believe laundry starch.

Recross-examination:

Carpet cops are threads, certain of the threads or yarn used in weaving carpet; that is not the ball of such thread or yarn, necessarily. It is the thread or yarn which is used in the carpet or rug in weaving and is sized. This sizing was applied to the thread itself. The word "cop" is usually used in the weaving art to refer to a spool or ball of the material.

As to how much over treatment by the acid process is seriously objectionable, why, the acid treatment should give a product which will not become lardy or pasty when it is converted into liquid glue, and it does not take very much overtreatment to bring about that condition.

Q. Well, will you compare in the matter of time? Suppose, for example, the acid process required twelve hours

to effect a proper treatment, how much longer could you carry the process without seriously overtreating it?

A. Well, that would depend very much on what your treatment consisted of.

Q. Would it be a matter of hours or minutes? I want to know approximately.

A. It would be less than a hour, probably.

Q. Then I suppose that ten per cent overtreatment would be seriously objectionable, would it?

[fol. 711] A. That would depend upon what the ten per cent was based on. You are speaking generally.

Q. Speaking of the matter of time, we will say.

A. Yes.

Q. That would be objectionable. When were the various lots which are described in the records which you brought into court yesterday, the dates of shipment of which are not given on the records, shipped to Poplar Bluff?

A. Between the early part of 1905 and August, 1905.

Q. Can you state any more definitely than that?

A. I believe most of these lots were shipped toward the early part of the period from the first of the year until August. That is as closely as I can come to it from memory.

Q. Now, quite a number of those lots are dated as sold in April. Do you think that the undated lots were shipped earlier or later than that time?

A. I can't say.

Q. In answer to a previous question you stated that according to the best of your recollection "Possibly 200,000 pounds or less" of sizing materials were turned out in 1904. Would you say that you turned out as much as 150,000 pounds in 1904?

A. I can't remember. I might look that up, if you want, if I have anything on it.

Q. Well, you might do so, please, and bring it in at the next session. About how long did you have a man at the Table factory trying to introduce your glue?

A. Why, according to my recollection, the man was in and out of the factory there for a month or two, but he was not actually employed in trying to introduce the glue all of that time. Probably only a week or ten days.

Q. You may answer the same question with reference to the Hood & Wright Company of Big Rapids.

A. I cannot remember.

Q. And how about the Votey Organ & Piano Company?

A. I think a man went there several times during the period of a month, probably, but in that case, if my memory is not at fault, he was not gluing up any stock more than three or four days of that time, and all that I saw of the stock glued up was very good.

Q. You stated that the material shipped to Plymouth was of much heavier body than you are making today. Was it raw starch?

A. Some of it was, as I recollect.

Q. And some of it was treated starch, was it?

[fol. 712] A. That is my recollection.

Q. You have stated that one of the objections to the acid process was that the glue base formed thereby might be left slightly acid. Now, the acid process, as I understand it, calls for neutralization, and when you neutralize is it not as easy to leave it a little over alkaline as it is to leave it over acid?

A. I should hardly say so. If your attention is drawn to it and you are working on that particularly, a man is much more apt to follow it out and get it right. You know what I mean.

Q. If you added a trifle more alkali than was necessary to neutralize the starch, you would get it slightly alkaline rather than slightly acid, would you not?

A. Yes.

Q. Did you change your understanding of the word "veneer" before or after the matter of this suit came up?

A. Long before the matter of this suit ever came up or was ever contemplated.

(The process records referred to marked "Plaintiffs' Exhibit 79.")

TESTIMONY OF WILLIAM H. WENRICK, A WITNESS ON BEHALF OF COMPLAINANT IN REBUTTAL JANUARY 19, 1915

I am superintendent of the veneer laying department of the Singer Manufacturing Company, South Bend. My

duties are such that I am familiar with the glueing up of veneers in the Singer plant there. I have been familiar with these for the past twenty years.

I remember Mr. Frank G. Perkins coming there to try out a vegetable glue of his. This was in the fall of 1906. He did have trouble using his glue there. He was there for over a year, until the fall of 1907. I did have something to do with the work on this glue of Mr. Perkins. I was helping him to get a mixture that would work. I was helping him practically all the time he was there.

As to troubles, well, the troubles as we had them, were to get the mixture so that it would flow, and so we could spread it, and to get the "set." We had trouble with the mixture. Sometimes it would become very short, and it would not remain fluid over night. And at other times we had the mixture so that it would separate and become sort of watery over night. And we experienced other trouble, of the mixture not setting, and the glue joint not drying, the glue not becoming hard. When the joints were [fol. 713] broken the joint inside seemed to remain damp. We had this condition of that kind until finally we struck a solution of mixing certain proportions of glue and water and caustic soda that gave us a fairly fluent mixture; in fact, it was fluent enough to do the work, and that gave us the set and gave us the strength we needed for the good of the wood joint that we were trying to make. It was along about September, 1907, that we got these qualities that I have last spoken of. During the interval Mr. Perkins did have trouble with regard to getting that glue sufficient strong, as well as with these other qualities of which I have spoken. I have spoken of the joints remaining wet. That is what we call soak joints.

We used this glue on all veneer sewing machine parts. We have used Mr. Perkins' vegetable glue ever since that time at the Singer plant. We have tried out casein there for this work. The casein worked very unsatisfactorily. We found it would be very ununiform, and we found it to decompose very rapidly after being brought into solution, and we found the joints to remain wet. And also it did not give the strength necessary to make a good veneer joint. We gave up the use of casein for these reasons.

The processes which Mr. Perkins used for mixing the glue and the glue itself, say, in the early part of 1907, did not satisfactorily do the work that we desired on these sewing machine veneers.

Cross-examination:

The first time that Mr. Perkins came to the Singer plant, to my knowledge, was in 1905. He came there taking in a general view of the situation as we had it there, the veneering end of the business. He did not make any experiments or bring any glue with him that I know of. So far as I know he never glued up any material during 1905 at the Singer plant in South Bend. As to his duties, further than to look around, in coming to South Bend in 1905, I do not know of any. He inspected the glue plant.

As to what other glue, besides starch glue is used at the Singer plant, I would say animal glue. We do have trouble with animal glue. We have had to reject some animal glue. The engineering department has charge of its acceptance or rejection. I haven't any say as to whether the glue material is accepted or rejected at all.

I was not at Cairo in 1905 or 1906.

As to changes made in the machine which was used at South Bend in 1906 and 1907 for glueing veneers, it was [fol. 714] found that we had to make changes, that is, the vegetable glue was of a more stiff and tenacious body than the animal glue, and it was found that we could not spread it with the same sort of a machine that we did the animal glue, and we had to make a different style of machine. We also made changes in the tanks which were used for dissolving this material.

As to percentages of water and starch we used during these experiments that Perkins was making, we varied from three parts of water to one part of starch, to two and one-quarter parts of water to one part of starch, as I remember it. As to the percentage of caustic soda, we varied from three to ten per cent. In the beginning, it runs in my mind, that we used less than three per cent of caustic calculated with reference to the starch; that we went as low as one-half of one per cent. The experiment with one-half per cent was not satisfactory. The solution in itself did not have the right consistency and did not set as it should and did not

seem to give the proper, necessary strength. We did use heat, 180 to 190 degrees. We also used heat when using three per cent mixture. It operated in two different ways, that is, with the high degree of heat it immediately broke down the fiber of the mixture and made a short, pasty mixture, that had no adhesive qualities, that is, none strong enough to consider making a veneer joint. And with a lower degree of heat it did not seem to throw the mixture in solution fluent enough to spread, and also it did not seem to give it drying qualities or setting qualities.

After trying the three per cent, we tried it at five per cent. That acted similar to the three per cent. We used heat in connection with that; very little heat in connection with that. As to who, besides myself and Mr. Perkins, was familiar with these experiments that we tried in 1906 and 1907, I had an assistant with me at the time that was familiar with them. He was Mr. Robert C. Wendt. I do not know where he is now. The last I knew of him he was living in South Bend.

I met Frank Baker at South Bend. As to when I met him there, I am not really positive of this, but I think that was in December of 1906, or in January or February of 1907. The work that we were glueing up at the Singer plant at that time was veneer sewing machine parts, that is, table tops. Those table tops were composed of from three to five layers. They were oak and walnut and gum on the outside, one-twentieth of an inch thick.

As to the proportion of water and vegetable glue material that we used at this plant in glueing veneers, as I remember, [fol. 715] it was two and three-quarters of water to one of glue. The first percentage of caustic that was used with reference to the starch was one-half of one per cent; as I remember, that is correct. The next mixture that we used, we used three-quarters of a per cent; and then after that, three per cent. This three per cent mixture was in the fall of 1906 possibly between two and three months after Mr. Perkins first went there.

As to the procedure we followed in mixing up the glue material, well, in the beginning we weighed or measured in the water into the mixing kettle, and then we gradually mixed in the starch. Well, in mixing with the lower percentages of caustic soda we put the caustic soda into the

water before we put the starch in, and then after the starch was in the water and thoroughly mixed up we turned on the heat until it thickened up and changed in color. That is, we first drew our water into the kettle, then added our caustic soda, that is, one per cent, and then heated the water to about 190 degrees after we put in the starch.

As to whether I know of any other plants in which they are using this vegetable glue, Perkins glue, I would say St. Louis Basket and Box Company was using that the last I knew about it. A plant down in New Albany, Indiana, the Indiana Veneering and Paneling Company. I do not know any other place I can say just now. I was never at these other plants during the time that the process was being installed.

Redirect examination:

Referring to our rejecting animal glue at times, this was done because it did not come up to the test required, that the contract called for, as I understand it. It did not come up to the requirement of the contract and therefore I should say it was a poor grade of glue.

As to whether, when we get the good grade of animal glue, we have trouble with it, well, no, I wouldn't say you would have any trouble with a good grade of glue.

We use the animal glue for different parts of cabinet work. They call it a different class of work. It would be joint work, you would say. We do not ever mix up the Perkins glue with three per cent caustic and heat.

Recross-examination:

We use animal glue on the joints instead of the vegetable glue principally on account of the quick action of the set there that enables it to be taken out of the clamp immediately the glue becomes sufficiently hardened to allow any [fol. 716] ordinary handling at that time. The vegetable glue ordinarily takes six to seven hours to set before you can take it out of the retainers. At the end of six or seven hours we ordinarily take it out of the retainers.

As to how long it takes the animal glue to set, on veneer work we run that from four to five or six hours. When I say that, I would say the same class of flat veneer work

with the animal glue would come out in from four to six hours.

For a number of years we used animal glue for glueing the veneers together just as we used vegetable glue; that is, we did that in my entire knowledge of the business up until we began with the vegetable glue. We never adopted the casein glue. We tried it. With the animal glue, when used for veneers, the amount of water would vary according to the grade of glue which we used and the class of work used. We have used various grades of animal glue. It would vary from one to one-half up to two and one-quarter to one; that is, one and one-half parts of water to one of glue up to two and one-quarter parts of water to one of glue. When we use the animal glue now for joint work we use from about one and seven-eighths to two or two and one-quarter. We vary the percentage of water to glue according to the uses to which we put it and the grade of glue that we have. We also use this animal glue on some work that we call bent work. That is where you build up a layer of veneers and bend them into different curved shapes and retain them in a form that will give you the desired shape that you want. We used animal glue on this bent work instead of vegetable glue for the reasons that I mentioned before; the setting qualities of the glue, which enables you to take it out of the form in a shorter period of time. That is, we do it just to save the hour or two of time because an hour means several forms, and different kinds of forms, as a rule, are of considerable expense.

DEPOSITION OF GEORGE L. FROST, TAKEN ON BEHALF OF PLAINTIFF APRIL 29, 1914

I am president of the Frost Veneer Seating Company and reside in New York City. I was assistant treasurer for that company in the year 1906.

I did know Mr. Frank G. Perkins. I met him at the office of the company; in the winter of 1906 he came there to introduce his glue. I think it was in the latter part of Janu- [fol. 717] ary or the first part of February. At to what Mr. Perkins did towards introducing his glue in our factory, well, we gave him carte blanche at the Jersey City factory

and he shipped his machinery there and also the glue. As to whether he tried to use the glue on any of the products of our factory I would say yes, we gave him veneers and he glued up several panels for us. These panels were the kinds that would be used for parts of furniture or for interior decoration. As to how long Mr. Perkins was trying to introduce his glue at our factory, he was there off and on from the early part of February to the early part of May, 1906. I have means of verifying my recollection in this regard, we have the sales ledger of the company showing several charges to Mr. Perkins. I produced the said sales ledger, and point out therein the accounts showing the charges to Mr. Perkins as follows, the account starting on page 569:

"F. G. Perkins

Debit Side

			C	
Feb.	15.	Frt. 4 48 exp. .40 .35	253	5 23
	17.	"	"	56
	23.	Exp.	"	50
	27.	" 2 b. 3 95 b. 50		4 45
	28.	Cash	"	10 00
Mar.	3.	Ch. ex.	C 263	4 71
	"	Cash	"	50 00
	10.	Ex. ck.	"	10 00
	17.	"	"	50 00
	24.	Sunds. expr.	"	10 00
	"	3/24 ex. ck.	"	40
	30.	Sunds expr.	"	25 00
	17.			6 40
		Amt. to page 119		177 25

Page 119

F. G. Perkins

		Amt. from page 569		177 25
1906.				
Mar.	31.		P. B. 65	5 93
Apr.	3/19.	Inv. Page Belting Co	P. B. 66	6 91
	3/31.	Collins Lavery & Co	66	23 06

1906.				
Apr.	9.	Oswald Rudolph	66	8 93
	7.	Theo. Smith & Sons Co	67	99 74
	3/31.	John S. Menagh Co	67	18 31
May	7.	Cash Adv. Am. C. GEF 150		20 00
				360 13

[fol. 718] Credit Side

1906.			C	
Mar.	5.		256	50
	17.		C 262	50
	24.		C 264	10
	26.		C 264	25
		Amt. to page 119		135
1906.				
		Amt. from page 569		135
June	30.	Balance to L/8		225 13
				360 13"

It is hereby stipulated by and between counsel for the respective parties, that subject to correction, should error be found to occur, the above may be accepted by the court as a corrected copy of the items found in the ledger under the account of F. G. Perkins, and may be used as evidence thereof, with the same force and effect as if the original ledger book had been duly proved and offered in evidence.

About two-thirds of the items I have referred to are in my handwriting, I think. All of page 119 and all of page 569, beginning with March 3rd.

As to the glue which Mr. Perkins was trying at our factory, I understood it to be a vegetable glue. We did not ever commercially use this glue, because Mr. Perkins was unable to prove that it was satisfactory for our work. As to why it was not satisfactory, the principal reason was because it would not hold. As to another reason, it discolored the wood on account of penetration. As to what I meant when I said "it would not hold," I mean that the

veneer could be easily torn apart. At that time we were using hide glue in our factory. We are using hide glue today. The glue which Mr. Perkins tried to demonstrate at our factory in 1906 was wholly unsatisfactory and we decided that we would not be able to use it, and we have been using hide glue ever since.

Cross-examination:

Mr. George E. Frost, my uncle, was in charge of the manufacturing end of the business of the Frost Veneer Seating Company in the winter of 1906. Yes, I did personally have conversation with Mr. Perkins before he began his attempted demonstrations. He stated that he had a glue which would be much more economical for our work, and asked if we would allow him to try it out. I do not remember him saying anything about whether his glue [fol. 719] was being successfully used elsewhere. I do not remember his stating that his glue was being successfully used at Poplar Bluff. I do not remember his mentioning that place at all. As to whether he said anything about the Singer Company, I would say no, that was long before the Singer Company. As to how do I happen to know when the Singer Company used it, I have been told that the Singer Company tried the glue about two or three years after Mr. Perkins tried it at our factory. I could not say who told me.

The product of the Frost Company between February and May, 1906, was the same as it always has been, manufacturers of veneer built up and compound wood; not for chair bottoms only; for any purposes. At that time they were making and we make anything that can be made out of veneering. We do not know what our customers use our product for. They might use it for furniture, for wall panels. Our company makes up sheets composed of a plurality of layers of veneering glued together and sell it in that form and the customers cut it up and use it for what they use or may receive order for making up any kind of veneered work for which the use may or may not be specified. As to the material which Perkins was attempting to demonstrate at our works, when it was received it was a dry powder. As to what he did to that

powder, it was dissolved in water. Nothing was added to the water that I know of. As far as I know of, it was dissolved in water merely. As to whether any heat was used in dissolving, yes, there was heat. The glue was dissolved in a kettle which was heated by steam. I do not know how long it was subjected to this steam heat. I do not recall whether Mr. Perkins brought with him or sent to our works any chemicals.

Yes, I do know what the business of either of the concerns mentioned in the items on page 119 of the ledger previously referred to was. The Page Belting Company are manufacturers of belting. Collins, Lavery & Company are lumber dealers. Theodore Smith & Sons Company are machinists. John S. Menagh Company are hardware people.

As to what is the strongest glue for veneering purposes on the market today, I consider hide glue. As to how does the price of hide glue compare with that of other kinds of glue, hide glue is the most expensive.

Redirect examination:

As to whether Mr. Perkins may have used some chemical or chemicals in the water in which he dissolved his glue, I [fol. 720] do not know whether he used chemicals or not. He might have used chemicals and I would not have known about it.

Plaintiff's Exhibit 3, Periodical. "Glue," October, 1910, Blue Penciled Article, p. 14 "Three Kinds of Glue"

Three Kinds of Glue

Glues three—animal, vegetable and mineral. Yes, and every one the best for some purpose, while it is also possible to use any one of these three for the same kind of work. Take, for instance, veneering. Animal glue is there the old standby, thought to be the glue—the only glue—until Perkins showed what the vegetable adhesives could do. Hardly were these adhesives tried out before there was a newcomer—the silicate of soda. Which is best? What is cheapest? Only a Glue Engineer can tell.

PLAINTIFF'S EXHIBIT 4, "THE FURNITURE MANUFACTURER AND ARTISAN," NOVEMBER, 1914, ARTICLE AT P. 226, "SOME MORE ABOUT VEGETABLE GLUES"

Some More About Vegetable Glues

Views and Interviews Concerning a Product Now Being Used in Furniture Industry Which Has Passed Experimental State and Contributes to Economy

By A. B. Maine

As one becomes more and more familiar with the furniture industry he can not help but be greatly impressed with the ultra-conservativenes of those engaged therein. There are, to be sure, some individuals who have a keen spirit of initiative, and who will adopt a new method, or a new machine, if it has apparent merit worthy of consideration, but far the great- number seem bent on preserving the traditions of their forefathers, especially in the manufacturing end of the business.

Considering the competition which marks the making of furniture it is easily understood that the manufacturer feels the necessity of being careful not to adopt some new thing which may tend to increase the burden of the plant, or to lessen the quality of the product, but one would naturally suppose that this same competition would keep the manufacturer alert for any change which might lessen the burden without injury to the quality, or raise the quality [fol. 721] without increasing the burden or help both the burden and the quality. That furniture manufacturers, as a class, are not alert is shown by the fact that one may find many plants today where there are no self-feed rip saws, no automatic jointers, no modern dry kiln equipment, no varnish sprays, no varnish dry kilns, few material trucks, no endless bed sanders, and in fact scarcely any of the more modern machines, or methods, in use.

If the user of new methods had to bear the burden of proof, the apparent reluctance of adopting these new methods might be more easily understood, but in these days the reputable manufacturer of new equipment, or new product, is the one who stands that burden, and he is usually ready

to bear the expense to prove that the use of his article will be beneficial to the user.

Great Gain in Its Use

To cite a concrete example it may be well to consider the use of vegetable glue—that produce which is now being used in the making of practically every kind of furniture from the cheapest to the most expensive. It is no credit to the users of this material that there have been more installations of vegetable glue equipment during the current year than in any previous year of its history, for the reputable manufacturers have been just as ready in the past to assume the burden of proof as they are today. Yet in spite of this fact the spirit of skepticism is so strong that many large glue users, as well as the smaller ones, still hesitate about its acceptance.

The first vegetable glue room that the writer saw was in a case goods factory in a town located almost in the center of Wisconsin. Entering the office one morning last December, when the outdoor temperature was way below zero, inquiry was made for the manager, and information received that he was in the facory but would return to the office shortly. (For convenience in narration the personal pronoun will now be used.)

When the manager came in I introduced myself and told him that I had heard that he had one of the most thoroughly equipped factories in point of safety to be found, and asked that I might be allowed to see the plant.

"You certainly are welcome. I'll take you around," he said, and then began an interesting visit. We passed through several departments paying special attention to the safety question, and let it be stated here that they certainly did believe in safety there, but coming in due time to the panel glue room my host said, "We pride ourselves on our safety devices, but we are equally proud of our [fol. 722] glue room. We are particularly fortunate in being successful users of vegetable glue. Here you will see all the operators at work today, yet before we started to use this glue there were many mornings in winter when this department could not operate on account of the glue congealing, or because the veneers got cold before they could

be properly laid and placed in the presses. If we were using animal glue we could not work here today, because we need absolutely all the steam that we can get to keep the building comfortable. Under no conditions, that I can think of, could we be induced to return to the use of animal glues, because we get out as good product with less waste and effort by using vegetable."

"Don't you have any trouble with this material?" I asked.

Less Trouble than With Other Glue

"Not near as much as we had with the other. At first, we had some troubles, but the manufacturer kept his demonstrator with us until these had been solved. Now we have hardly any. When we do it is found to be our own fault because we fail to keep to the proper use. We have no glue fears now, because we know that every lot we get is prepared for our own use, and that the quality is the same in every instance."

"That's all right," I replied, "but having your confidence are you not afraid the manufacturer may ship you an inferior grade?"

I can still see his smile as he said, "No, we've got him tied up with a contract. You see it's this way—the glue man puts in the special equipment and demonstrates the efficiency of his goods on condition that if it proves satisfactory we use his product for a term of years. The contract at first looks like a mighty good thing for the glue manufacturer, and it is, but it also is a very good thing for us because in order to make it effective he has to make good all the time. So we are protected by the agreement."

"Then at the end of your present contract you think you will renew it?" I asked.

"I should say we will," he said with much emphasis. "As long as the manufacturer guarantees to protect us we will show our appreciation by using his product."

That in substance is what I gleaned from my first visit in a vegetable glue room. Later in Chicago I called on a manufacturer of doors that are used in hotel and office buildings all over the country, and informed an officer of the company that I was interested in vegetable glue. I

[fol. 723] got about the same information that is above recorded but his first words were, "Well, we use it, and we even go so far as to use it in our automatic glue jointing machine."

One hot day last June I had a visit with the president of one of the largest kitchen cabinet companies known, and in the course of conversation touched on the glue subject. He said:

"We use vegetable glue and it is a pleasure to go into our glue department now. I always used to avoid this department, especially, in the summer time, because the odor used to make me sick, but now I enjoy going there. Would you like to see it?"

The visit simply corroborated the evidence mentioned elsewhere in this article, with the additional emphasis on the lack of disagreeable odor one is so apt to find in places where animal glues are used.

"I understand that you are using vegetable glue in your panel work," was said to a well known Michigan manufacturer of parlor beds while making him a visit on September 8. "What do you think of it?"

Like a flash came the answer, "It's all right. The only one who can possibly have any objection to vegetable glue is the man who makes the other kind."

Practical Demonstration

With his foreman I visited the department and learned that the work was given the same consideration that it had received when the other glues had been used. That is to say, the glued up material was left in the clamps and allowed to dry just as long, and not given any more attention than had been given to it under the old process. I was shown four panels under different tests. One was placed out doors where it could be reached by all the elements of the weather. One was in the lumber dry shed being subjected to the steaming and drying out process that the lumber was put through. One was in the varnish dry kiln where it suffered the changes from 115 degrees of heat to normal, and one was in the factory office where it could be under normal conditions. The four panels had been made

at the same time in an ordinary run of stock, and they had been in their respective places for six weeks when I saw them. So far as the eye could see the glue joints were the same in every case and no better joints could be desired. This foreman told me that he was saving at least twenty-five per cent of his former glue room costs and that he believed the annual saving would be even greater than that.

[fol. 724] On September 21 I called on C. H. McMillan, general manager of the Winnebago Furniture Manufacturing Company, Fond du Lac, Wisconsin. We were in the midst of a general conversation and he was looking over a copy of this periodical when he came to an advertisement.

"That's what we use here," he said.

"In your veneer work?" I asked.

"Yes, and everywhere else that we use glue. I know that the manufacturer is not strongly recommending its use for end joint work, but we do it and we are getting the results. We haven't any other kind of glue in the whole factory."

The Courage of His Convictions

Much more was said which only confirmed the other evidence, and I asked if he had any objection to being quoted. He did not. He had the courage of his convictions and any one was welcome to his belief that he had a good thing. If they wanted to use it, well and good. If not, it was their business.

In marked contrast to this view was the attitude of a certain manufacturer of period and high grade furniture known for its quality from the East to the West. He admitted having used vegetable glue for some time and said that he would not go back to the use of animal glue. That he was saving money, and getting out as good a grade as ever, but he didn't believe in advertising the fact for the benefit of any competitors. I am not quite sure whether he meant his competitors would install the process if they knew he was using it, or knock his goods because they were manufactured where vegetable glue was used. In either case he need have no fear, for some of his competitors used this glue before he did, and it is a well known fact that you can usually afford to pay a man who knocks your goods.

Out of several other instances permit me to quote one more. In St. Louis, on September 22, the man I talked

with was the secretary of a large panel manufacturing company, whose products are used by the manufacturers of kitchen cabinets, case goods, beds, tables and other lines. This company has used vegetable glue for years and its product is going into all kinds of homes in all parts of the country, because it is used by manufacturers of all kinds of furniture. He told me one of his early troubles and how the glue manufacturers had stuck in the face of all kinds of discouragements until all the troubles had been solved so that now there was only one kind of glue for them. He cited the [fol. 725] instance of the receipt of a recent order in which the buyer had specified that vegetable glue was not to be used, but when he had been told of some of the manufacturers who were using it he came back with the order and said use vegetable glue.

From the foregoing it will be seen that the skeptic has built a house of cards, and they have fallen. It took time, but thanks to the perseverance of a few who had faith in the product and the pluck to fight an up-hill fight vegetable glue has passed from the experimental to the thoroughly practical state.

Perhaps a word of warning will not be out of place. There are always some who wait until a product has become a success so that people begin to use it with confidence, then they come forward with what is reputed to be as good a product for less money. Then there are those enemies of a product who see its popularity growing to the detriment of their own, who by surreptitious methods seek to tear down the confidence in the new product. Vegetable glue has both these conditions to contend with, and it will be well for the intending users to be very careful lest he fall into bad company and have his faith in a first class material absolutely destroyed.

PLAINTIFF'S EXHIBIT 5, "VENEERS," OCTOBER, 1914, P. 12, LAST OF TWO PARAGRAPHS OF THE ARTICLE "ABOUT VENEER STAIN"

I recently met an eastern furniture manufacturer who has just returned from a trip to Grand Rapids, and who, by the way, was investigating vegetable glues; how they should be applied and what results manufacturers are

having, also what advantages if any, one gets from vegetable glues over hide and bone stock. The gentleman had with him a small panel veneered with birdseye maple veneer. He said, "See the stain?" I did observe it. "That is the only objection I have to vegetable glue." I asked him: "Did you find this to be a general trouble?" He replied that he did not. It seems to me that the proper parties to take this trouble up with would be the concern selling the glue. Vegetable glue has come to stay. There is no longer a question about this. Some manufacturers had trouble attending its initiatory use, but it must be remembered that these troubles were largely caused by ignorance of its characteristics and lack of intelligence in its application.

A glue salesman said to the writer a few days ago: "I do not know what we would have done if it were not for the fact that some of our trade is now buying vegetable [fol. 726] glue." The fast decreasing herds of cattle is causing a shortage in raw material from which animal glue is made. Prices are unsettled. The writer knows that a certain glue factory will not make contracts for any length of time, not knowing what it will have to pay for material. Most readers know that some of the large glue houses have advanced prices several times within the past two years. If your vegetable glue stains the veneer, it must be neutralized, and the manufacturer supplying the stock should be able to do so. In any event, take this question up with him. If he desires your business it is up to him to supply you with material that will do your work.

PLAINTIFF'S EXHIBIT 6, "THE FURNITURE MANUFACTURER AND ARTISAN" SEPTEMBER, 1914, THE ARTICLE AT PAGE 133, "VEGETABLE GLUE HAS ARRIVED"

Although a Great Saving Can be Made by Its Use There are Manufacturers Who Refuse to Experiment and Investigate—Change Seems to be Coming

By G. D. Crain, Jr.

Those engaged in the woodworking field are sometimes accused of lacking that spirit of initiative which character-

izes metal workers—to take one field where progress has been marked along the lines of adoption of new machines and new methods as the years have rolled by. It must be admitted that there is something in the charge. For one thing, certain plants in the furniture business are operating with equipment that is practically obsolete, and yet manage to hold up their end in competition and to pay dividends to their stockholders. Evidently the general average of efficiency can not be high.

Unwillingness to adopt a new idea, or a new thing, until it has made good, is conservatism; and conservatism is a most useful and necessary qualification for the business man who would succeed. But unwillingness to try out the new idea is conservatism gone to seed. Instead of being useful and necessary, it is a positive handicap, introducing inertia and decay and dissolution. Some furniture manufacturers are conservative; others——

One splendid example of the ultra-conservatism, not anly of the furniture makers but of members of the woodworking trades generally, is furnished in the experiences of those who have been marketing vegetable glue for a number of years. There is no longer any question about the efficacy of this material, so that the statements which follow [fol. 727] may be made without any danger of controversy. It is now generally admitted, even by those who do not use vegetable glue, that it is all right, and that it has made good. The point is that it has taken many more years to accomplish this result than it should have taken.

The writer has been informed by those in a position to know that the vegetable glue manufacturers have always done everything in their power to safeguard the use of the material, and to insure the satisfaction of the user. They have stayed on the job until troubles which developed have been smoothed out, and until the whole system is working properly. They have backed up the assurance of the user to his customers with their guarantee, so that any losses which might have been suffered would not fall on the consumer alone; and yet, in spite of this attitude—this willingness to stand responsible for results—the originators of the idea found it amazingly difficult to get those who used glue in large quantities even to give it a trial.

The proposition had merit, and it has kept growing and kept making good with glue users, so that in the natural course of events top and panel manufacturers, furniture men and others in the business ultimately realized that vegetable glue was all right and would make a joint that would hold and would do the work required of it. But instead of the attitude of the glue buyer being one of interest—as it might have been, in view of the fact that the successful adoption of the material would practically cut his glue bills in two—it has always been one of decided indifference, and the vegetable glue man has had to fight to get the big buyer, as well as the little one, to give the proposition even causal consideration.

Of course, the furniture man who uses only a little glue, and who has equipment designed for the preparation of animal glue, may feel that with the small amount of gluing up that he has to do it would not be worth while to experiment, especially as the possible saving in his case would not be sufficiently great to form a very large inducement. As the old material is giving satisfaction, such a manufacturer may logically reason, there is no convincing argument in favor of throwing it out and putting in some other material, with an entirely different line of equipment and entirely new set of methods, all of which means a certain amount of difficulty because of the necessity of imparting much necessary information to employes who have that part of the work to handle.

[fol. 728] Such an attitude is understandable; but in the case of the concern which, say, is laying all its own veneers, doing an immense amount of gluing-up and spending thousands of dollars a year for glue, one would suppose that the chance to cut this bill in half would be sufficiently appealing to get action. But it has not usually been that way.

One of the best furniture manufacturers in the country, a man who has adopted a lot of splendid methods in the conduct of his plant has consistently refused to use vegetable glue.

"What do you think of vegetable glue?" he has been asked a number of times by people who regard his opinion as being worth more than the average.

"I am not using it, am I?" he has replied. "I could save a good many dollars a year by substituting it for the

glue I am using, and, inasmuch as I am continuing to use animal glue, that is pretty good evidence of what I think on the subject."

This manufacturer, it happens, has made a special study of animal glue. He is a close student of their grading, blending and handling, and gets remarkably good results with them. He has special testing equipment for determining whether any particular lot is up to his requirements, and his spreaders and other glue-room equipment are the latest and best. He has a considerable investment in machinery, while his investment in experience is correspondingly large. It is easy to understand that he leans toward animal glues because of the good result which he has learned how to get; but is it fair to his stockholders, to look at it merely from one standpoint, to refuse to consider the possibility of saving enough money to pay dividends on a good many shares?

If a lumberman were to come to this furniture manufacturer with a proposition which would result in his getting equally good stock for several dollars a thousand less than he is now paying, the chances are that he would at least look into the matter very thoroughly. If course it is not certain that he would accept it, because the dimension lumber people, who have an excellent proposition, and one that, judged from nearly evey point of view, is beneficial to the consumer, have had a hard row to hoe in educating the furniture trade in this direction. But that again suggests that there is too much willingness to stick to the old methods because they are old and without knowing that they are the best possible, and too great reluctance to discard those which have served their time and have been improved upon.

[fol. 729] The method used by a certain furniture concern which had been impressed by the advantages of using vegetable glue seems to be a sensible, fair one, and yet it is not used in regard to any problem of the factory nearly so often as it should be.

This house secured the names of the people who were using glue of that kind, and then sent one of its best men to each of them, securing a full report on their experiences, and describing exactly and in detail the methods that are used to insure proper results. The reports which it has

received have been very interesting, and have convinced the furniture company that it would be perfectly safe in making a change in its gluing system, and that it can hardly go wrong is indicated by the number and standing of the houses which are leading in the use of the vegetable variety.

One of the reasons which it might be thought would appeal with particular strength to the furniture manufacturer in this connection is the simplicity, relatively, with which vegetable glue may be used. There is no heating of the material necessary, and when it is remembered that a large percentage of the troubles arising from the failure of glued-up work to hold is due to using glue that has been heated to too great a temperature, this advantage looms up as one well worth considering. Then, too, animal glue frequently fails to give the best results because of the fact that it is allowed to cool off before the work gets into the presses. This is not the fault of the glue, of course, but it gives a chance to make mistakes that careless employes sometimes take advantage of.

There are numerous opportunities to introduce errors of omission and commission in making built-up stock, and the more of these opportunities the manufacturer eliminates, the better the work is going to be. No workman is infallible; and if the process of manufacture is simplified, the general average of his product is going to advance.

There are a great many glue-users who probably will never use anything but animal glue. This is all right, because animal glue is a valuable by-product of the beef, and it is thoroughly desirable that it be continued in use. But there are users of glue who could profitably introduce the use of the newer but equally effective vegetable product who are refusing to make the investigation which the proposition warrants. And there are others who have reached the turning of the way, and who, after having seen the favorable experiences of their neighbors in the trade, have [fol. 730] decided to try it out in their own plants.

Certainly an open mind is an asset to the head of a manufacturing plant, and those who refuse to open theirs to consider any proposition involving an alteration in their present methods of doing business are not going to progress very rapidly. And looking into the glue proposition is only one of numerous opportunities to forge ahead that some furniture manufacturers are refusing to take hold of.

PLAINTIFF'S EXHIBIT 7, TRADE PAPER "VENEERS," DATED SEPTEMBER, 1914, ARTICLE ON PAGES 18 AND 19, "CUTTING DOWN GLUE COST."

Cutting Down Glue Costs

By Junior Keller

A manufacturer of built-up stock, who believes in using a good grade of animal glue for all his work, has a superintendent who has come to the conclusion that on the cheaper kinds of work there is no logic in using as much glue or as good glue as when he is making expensive tops or panels. Consequently he has evolved a system which deserves attention, for it has proved an economy, as to glue without seriously hurting the quality of the work.

The plan is simplicity itself. It involves putting flour into the glue, and thus, without altering the consistency of the body, decreasing the proportion of glue which may be used. It would not do, obviously, to use too much water, as this would thin the material down to the point where it would not be able to do the work; but the use of the flour prevents it from getting too thin.

Then, on the other hand, flour itself has considerable value from the standpoint of viscosity. In the good old days of kite-flying, wasn't flour the chief element used in the manufacture of the paste which held those amateur airships together? Thus substituting flour for glue cannot be said to be taking away all of the qualities of the latter material, for flour supplies some of them, at all events.

The plant where this plan is being used is one of the best in the country, and the fact that it seriously considers reducing the cost of material in this way shows that the point is one worth attention. As suggested above, however, the flour mixture is not used on high grade stock, but on cheap work, where quality is not the main consideration, and where perfection to the extent of 100 per cent is not re- [fol. 731] quired, it works alright. In fact, the use of flour corresponds very closely to the use of silicate of soda in the cheap three-ply stock which is handled so largely nowadays, only the glue-flour mixture is probably a good deal better.

Some experience is needed, of course, to determine exactly the proper proportions of glue and flour to use. To put in too much will be disastrous; and it was stated that

one lot of built-up stock turned out badly just on this account. However, after a few experiments it will be found just how much flour the glue can stand without losing the margin of safety altogether. A concern which is using any considerable amount of glue would find this method an economy, but in the plant which does only a little gluing up, it would probably not be worth the trial, on account of the necessary risk involved.

In connection with saving money on glue, it must be admitted that the most practicable plan seems to be the use of vegetable glue. It is now generally conceded that it has made good and has come to stay, and the critics who formerly insisted that it would not fill the bill are now ready to admit that it will answer the purpose very well. And since the average plant can save 50 per cent of its glue appropriation by using the vegetable variety, it looks as though there is a mighty good argument in favor of this plan.

The splendid way in which vegetable glue houses have stood by their customers, literally "through thick and thin," is one of the reasons for their success, which seems now to be assured. The writer was told some time ago of the experience of a big panel factory which started using vegetable glue when it was much of an experiment, and of the troubles it had before it found exactly the right methods and the right combinations to produce perfect satisfaction. During the trials and tribulations that it met with, the glue house was right with it, and helped it to solve its problems, with the result that the panel manufacturer finally succeeded in getting the knowledge of the vegetable product which was all that was needed to insure complete success. Now, it goes without saying, nothing could induce him to use anything else.

[fol. 732] PLAINTIFF'S EXHIBIT 8, "CHICAGO MUSICAL TIMES," MARCH 9, 1910, ARTICLE ON PAGE 13, "PERKINS GLUE IS A GREAT SUCCESS"

The Perkins Glue Is a Great Success

Something Further About the Vegetable Glue Manufactured in South Bend, Ind.—The Advantages of a Cold, Thin Glue in Veneer Work—A Saving of Over 20 Per Cent in Cost

In the Musical Times of January 26, 1910, was published an account of a new thin glue that is being used in the great plant of the Singer Manufacturing Company in South Bend, Ind., with excellent results.

Alert piano manufacturers naturally read the facts with great interest and this office was immediately importuned for further particulars. In order to answer these various inquiries we again refer to the subject.

The glue is styled Perkins Glue—a purely vegetable glue manufactured by Frank G. Perkins in South Bend, Ind., by a secret process. It is made from the cactus plant and is sold to manufacturers in flake form. It is then mixed with a certain proportion of water and a chemical furnished for the purpose is added and this chemical causes the glue to come to a boil. It is then allowed to cool and is almost as thin as water. It can be spread cold and of course very thin, and requires but twenty-four hours, or even less, to dry.

In addition to the several other favorable points the item of saving is very marked—the manufacturers showing by conclusive proof that over 20 per cent in cost is saved by using vegetable glue. This makes a mighty strong showing as a matter of course.

For veneer work and all "building up" work those who use this glue say there is nothing like it in value—and the neatness and cleanness can easily be understood, for the disagreeable features attendant upon hot animal glue are entirely eliminated.

The company are largely extending their facilities and are thus in shape to take care of orders. Heretofore, their entire output has been taken by their old customers—con-

cern like the great sewing machine plant of the Singer Manufacturing Company. But the increased factory space makes it now possible to take on new business.

Manufacturers who are interested can learn all of the particulars by writing to the manufacturer, Frank G. Perkins, Dean Bldg., South Bend., Ind.

[fol. 733] PLAINTIFF'S EXHIBIT 9, COPY OF "CHICAGO MUSICAL TIMES," JANUARY 26, 1910, ARTICLE AT PAGE 19, "NEW THIN GLUE INTERESTS PIANO MEN"

New Thin Glue Interests Piano Men

It is made in Florida from the Cactus Plant and is Almost as Thin as Water—Can be Piped to any Part of the Factory and Spread Cold—Singer Sewing Machine Plant at South Bend Uses it.

Up-to-date piano factory superintendents who are always on the lookout for features that will improve the product or facilitate the factory work are taking considerable interest in a glue which, it is said, is used exclusively at the big plant of the Singer Manufacturing Company, South Bend, Ind., where sewing machines are made by the thousands.

This glue is manufactured in Florida from the cactus plant and is sold to manufacturers in flake form. It is then mixed with a certain proportion of water and a chemical furnished for the purpose is added and this chemical causes the glue to come to a boil. It is then allowed to cool and is almost as thin as water. It can be spread cold and of course very thin, but it requires forty-eight hours to dry.

A foreman in a well known western piano factory was sent to South Bend by his employers to investigate the system of glueing used by the Singer Manufacturing Company. He returned very enthusiastic over the merits of this glue and claims that it will be a great boom to piano manufacturers as soon as the makers are able to increase their capacity sufficient to take on business of the piano trade. Just now it is said that the demand for the glue is so large that the company is unable to fill all orders, but

is increasing its manufacturing facilities as fast as possible. The glue is a comparatively new proposition, hence the inability of the makers to produce it in sufficient quantities at present.

According to the foreman who visited the Singer plant they mix this glue in a huge vat and pipe it to various parts of the factory. They do all their veneering with it and the Singer officials state that it is the biggest kind of a success. The cost of the glue is about the same as the old style animal glue though there will be a big saving it in its use because of the fact that so little is required to accomplish the result.

If this glue will do all that is claimed for it, it will certainly be a boon to piano manufacturers. It will do away with the ill-smelling and dirty glue pots and glue heaters [fol. 734] and will simplify the process of veneering to a wonderful degree. The many things in favor of the glue easily more than counter-balance the one drawback in the matter of slow drying. As long as the glue after being properly mixed is kept in pots or vats or other receptacles it will not dry and will last practically unlimited time or at least its consistency will not be changed for weeks and of course it can be mixed in as small quantities as desired so that there need be no fear of waste because of its drying in bulk.

[fols. 735 & 736] (Here insert three photographs, Plaintiff's Exhibits 10, 11, 12 in Solva case)

[fol. 737] PLAINTIFF'S EXHIBIT 79

Process Record

Tank No. Record of Lot 25 Date Received

Gross amount from warehouse Kind
Estimate of sieve loss Net
Inches of liquor Density
When pumped into special dept.

Treated as Below

	Lbs.	Time	Date	Temp.	Dens.
Tank No. 7		Drew off 9-11A	10/21	Washed & filled	
" " 5		Partly filled 9-A	10/21	Stirrer on	
" " 5		Drew off	10/25		
" " 5		Partly filled 4 P	11/1/04 & stirred 9½°		
" " 5		Pumped to 13 7-10A	11/2	9½°	
" " 5		Ammonia 2 gal 7 A	11/2	Neutralized 9½°	
" " 7		Drew off 5:30 P	11/2	Refilled & stirrer on	
" " 7		Pumped to 13 A	11/4 & tabled		
" " 7		Threw to #1 from tables	11/7 & mixed		
" " 7		Tabled 2nd time	11/8		

Pumped to tank No. 5 Date 11/2/04
Tabled #5 11/2/04 Tabled in about 4½ hrs.
#7 11/4/04-11/8/04 second time
Into Kilns #5 11/3/04
#7 11/9/04 Temp. 150
Dumped to hoppers #5-11/7/04
#7-11/14/04 Loss on lots 52 & 35-7
#5-11/12/04 #5-20517 20%
Packed date Lbs. Moisture
Viscosity, W. House sample By
Viscosity, Raw-Mat. sample By
Loss
Sold to

[fol. 738]

Plaintiff's Exhibit 79

Process Record—Continued

Tank No. Record of Lot 25 Date Received

Gross amount from warehouse Kind
Estimate of Sieve loss Net 22994#
Inches of liquor Density
When pumped into special dept.

Treated as Below

	Lbs.	Time	Date	Temp.	Dens.
Tank No. 5 Drew off		7 A	10/10	Filled & stirred	
" " H_2SO_4 368# (1.6%)		9:30 A 10A	10/10	14°	B.
" " 7 Filled & left stirring			10/10		
26498 7 $K_2Mn_2O_8$ 33		3:30 P	10/13	10°	B.
Tank No. 5 Drew off		9-11 A	10/14	Washed & filled	
" " 5 " "		9-A	10/15	"	"
" " 7 Let to settle		9-A after	"	$K_2Mn_2O_8$ on 10/13	
" " 7 Drew off		9:30 A	10/17	14°	B.
" " 7 H_2SO_4 338		3:30 P	"	"	
" " 7 Run short on		4	P H_2SO_4 should been 1.6%		
" " 5 Drew off & washed			10/17 & filled		
" " 5 " " "			10/18 "		
" " 7 Partly filled		4 P washed	10/18 let to settle		
Pumped to tank No.			Date		
Centrifuged				Temp.	
Into kilns					
Dumped to hoppers				Moisture	
Packed, date	Lbs.			By	
Viscosity, W. house sample				By	
Viscosity, raw-mat. sample					
Loss					
Sold to					

[fol. 739]

Plaintiff's Exhibit 79

Process Record.

Re-mixed 8/10

Tank No. 7 Record of lot 25 Date resieved 8/12/04
22437 Gross amount from warehouse 220-29040 Kind Sago
Estimate of sieve loss 10% = 2904 Net 26136
22437 Inches of liquor 44 Density 11
When pumped into special dept.

Treated as Below

			Lbs.			Time	Date				
22437						10 A	8/13				
Tank	No. 6	Drew off					8/15				
22437	"	CaOCL "	240#	(2nd water)		10 A	8/18				
22437	"	" "	450#	(1st ")		4 P	8/20	after	#3	was	in
44874	"	" "	450#	(2nd ")		9 A	8/23	"	#3	"	"
44874	"	Ca O Cl "	450#	(1st ")							
	"	" "	450#	(2nd ")		4 P	8/27				
44874	7	" "	160	(1st ")							
		"	160	(2nd ")							
		"	160	(3rd ")		2:15-2:40	9/15		17°B.		
	H_2O_2	647					9/21-22				
	Engine stopped repairs					6:30 P.	7:15 P.		10/8		16°B.
22994	5	$K_2Mn_2O_8$ 1/8%	28½#								

808

Pumped to tank No. Date
Centrifugled
Into kilns Temp.
Dumped to hoppers
Packed, date Lbs. Moisture
Viscosity, W. house sample By
Viscosity, raw-mat. sample By
Loss
Sold to

[fol. 740] Plaintiff's Exhibit 79

Process Record

Re-mixed 8/13

Tank No. 7 Record of lot 26 Date resieved 8/15
22437 Gross amount from warehouse 221=29172 Kind Sago
Estimate of sieve loss 10% = 2917 Net 26155
22437 Inches of liquor 44 Density 11
When pumped into special dept.

Treated as Below

Lbs. Time Date Temp. Dens.

Tank No. 3 Drew off 8/19 & stirred
Combined with Lot 25—tank 6—8/20

Pumped to tank No. Date
Centrifugled
Into kilns Temp.
Dumped to hoppers
Packed date Lbs. Moisture
Viscosity, W. House sample By
Viscosity, Raw-mat. sample By
Loss
Sold to

Plaintiff's Exhibit 79

Finished Dry Test:

Lot #25
From Lab kiln Date, 10/19/04
Moisture
Method of test D. J.
Ratio of test 10 ozs.: 1 gal.
Viscosity 17-17
Color yellow Reaction neutral
Body good Dirt some dirt
Condition when cold liquid Dissolving O. K.
Condition cold after 72 hours

Notes on Wet Test:
Notes on Dry Test:

10# sample tank 5 neut. with bicarb. soda

[fol. 741] Plaintiff's Exhibit 79

Test Department

Lot No. 25 Date, 10/19/04

Wet Test from Process

From Lab. sample Tank No. Amt.

Method of test	D. J.	
Ratio of test	10 oz.	
Viscosity	30-30	
Color	O. K.	Reaction neutral
Condition when cold	O. K. liquid	Dirt O. K.
Condition cold after 72 hours		Diss. Fair

Plaintiff's Exhibit 79

Finished Dry Test:

25

From Lab. sample Date, 10/19/04

Moisture

Method of test	D. J.	
Ratio of test	10 ozs.: 1 gal.	
Viscosity	27-27	
Color good	Reaction very slightly acid	
Body O. K.	Dirt fair	
Condition when cold liquid	Dissolving some grit	
Condition cold after 72 hours		

Notes on wet Test:

Notes on Dry Test:

5# sample from tank 7 drained & dried on 10/7/04

[fol. 742] Plaintiff's Exhibit 79

Finished Dry Test:

Lot 25
From Lab. Kiln Date, 10/22/04

Moisture
Method of test D. J.
Ratio of test 10 ozs.: 1 gal.
Viscosity 25-24-24
Color O. K. Reaction very slightly acid
Body O. K. Dirt O. K.
Condition when cold Dissolving very good
Condition cold after 72 hours

Notes on Wet Test:

Notes on Wet Test:

Plaintiff's Exhibit 79

Test Department

Lot No. 25 Date

Wet Test from Process:

From Tank No. Amt.

Method of test
Ratio of test
Viscosity
Color Reaction
Condition when cold Dirt
Condition cold after 72 hours

Finished Dry Test:

From Tank 6 Date, 8/20/04

Moisture
Method of test D. J.
Ratio of test 10 ozs.: 1 gal.
Viscosity 25-25
Color O. K. in spot plate Reaction neutral

Body fair — Dirt O. K.
Condition when cold solid — Dissolving not good
Condition cold after 72 hours solid

Notes on Wet Test:

Notes on Dry Test:

[fol. 743] Plaintiff's Exhibit 79

Test Department

Lot No. 25 — Date

Wet Test from Process:

From — Tank No. — Amt.

Method of test
Ratio of test
Viscosity
Color — Reaction
Condition when cold — Dirt
Condition cold after 72 hours

Finished Dry Test:

From Tank 6 — Date, 8/24 04

Moisture
Method of test — D. J.
Ratio of test — 10 ozs.: 1 gal.
Viscosity to many floating drugs
Color dirty — Reaction neutral
Body O. K. — Dirt full of dirt, not bleached
Condition when cold — Dissolving not good
Condition cold after 72 hours

Notes on Wet Test:

Notes on Dry Test:

[fol. 744] Plaintiff's Exhibit 79

Test Department

Lot No. 25 Date, 8/24/04

Wet Test from Process:

From Tank 6 Tank No. Amt.

Method of test L. S.
Ratio of test 3° B.
Viscosity 29-29
Color O. K. Reaction neutral
Condition when cold solid Dirt O. K.
Condition cold after 72 hours solid

Finished Dry Test:

From Date

Moisture
Method of test
Ratio of test
Viscosity
Color Reaction
Body Dirt
Condition when cold Dissolving
Condition cold after 72 hours

Notes on Wet Test:

Notes on Dry Test:

[fol. 745] Plaintiff's Exhibit 79

Test Department

Lot No. 25 Date, 8/25/04

Wet Test from Process:

From Tank 6 Tank No. Amt.

Method of test L. S.
Ratio of test 3° B.
Viscosity 21-21 jelat 68° C

Color O. K. Reaction neutral
Condition when cold livery Dirt O. K.
Condition cold after 72 hours livery

Finished Dry Test:

From Date

Moisture
Method of test T hIz
Ratio of test
Viscosity
Color Reaction
Body Dirt
Condition when cold Dissolving
Condition cold after 72 hours

Notes on Wet Test:

Notes on Dry Test:

[fol. 746] Plaintiff's Exhibit 79

Test Department

Lot No. 25 Date,

Wet Test from Process:

From Tank No. Amt.

Method of test
Ratio of test
Viscosity
Color Reaction
Condition when cold Dirt
Condition cold after 72 hours

Finished Dry Test:

From Tank 6 dried in Lab. kiln Date, 8/25/04

Moisture
Method of test D. J.
Ratio of test 10 ozs.: 1 gal.
Viscosity 45-45

Color yellowish — Reaction neutral
Body O. K. — Dirt O. K.
Condition when cold solid — Dissolving fair
Condition cold after 72 hours solid

Notes on Wet Test:

Notes on Dry Test:

[fol. 747] Plaintiff's Exhibit 79

Test Department

Lot No. 25 — Date 8/25/04

Wet Test from Process:

From Tank 7 — Tank No. — Amt.

Method of test — L. S.
Ratio of test — 3° B.
Viscosity 29-29 jelat 67° C
Color O. K. — Reaction neutral
Condition when cold solid — Dirt O. K.
Condition cold after 72 hours solid

Finished Dry Test:

From — Date.

Moisture
Method of test
Ratio of test
Viscosity
Color — Reaction
Body — Dirt
Condition when cold — Dissolving
Condition cold after 72 hours

Notes on Wet Test:

Notes on Dry Test:

[fol. 748] Plaintiff's Exhibit 79

Test Department

Lot No. 25 Date, 8/25/04

Wet Test from Process:

From 6-7 Tank No. Amt.

Method of test	L. S.
Ratio of test	3° B.
Viscosity	33-34 jelat 66° C.
Color slightly yel in spot plate Reaction neutral	
Condition when cold	solid Dirt O. K.
Condition cold after 72 hours	solid

Finished Dry Test:

From Date,

Moisture	
Method of test	
Ratio of test	
Viscosity	
Color	Reaction
Body	Dirt
Condition when cold	Dissolving
Condition cold after 72 hours	

Notes on Wet Test:

Notes on Dry Test:

[fol. 749] Plaintiff's Exhibit 79

Test Department

Lot No. 25 Date,

Wet Test from Process:

From Tank No. Amt.

Method of test	
Ratio of test	
Viscosity	

Color Reaction
Condition when cold Dirt
Condition cold after 72 hours

Finished Dry Test:

From Tank 7 dried in Lab. Kiln Date, 9/1/04

Moisture
Method of test L. S.
Ratio of test 10 ozs.: 1 gal.
Viscosity 22-22, jelat 78° C.
Color slight yellow Reaction
Body good Dirt O. K.
Condition when cold livery Disolving fair
Condition cold after 72 hours livery

Notes on Wet Test:

Notes on Dry Test:

[fol. 750] Plaintiff's Exhibit 79

Test Department

Lot No. 25 Date,

Wet Test from Process:

From Tank No. Amt.

Method of test
Ratio of test
Viscosity
Color Reaction
Condition when cold Dirt
Condition cold after 72 hours

Finished Dry Test:

From Lab. Kiln Date, 9/17/04

Moisture
Method of test L. S.
Ratio of test 10 ozs: 1 gal.
Viscosity 39-4243, jelat 75° C.

Color yellowish	Reaction neutral
Body good	Dirt O. K.
Condition when cold liquid	Dissolving some grit
Condition cold after 72 hours	solid

Notes on Wet Test:

Notes on Dry Test:

[fol. 751] Plaintiff's Exhibit 79

Test Department

Lot No. 25 Date,

Wet Test from Process:

From Tank No. Amt.

Method of test	
Ratio of test	
Viscosity	
Color	Reaction
Condition when cold	Dirt
Condition cold after 72 hours	

Finished Dry Test:

From Lab. Kiln Date, 9/15/04

Moisture	
Method of test	L. S.
Ratio of test	3° B.
Viscosity	35-35. jelat 67° C.
Color slight yellow	Reaction acid
Body good	Dirt O. K.

Condition when cold liquid dissolving—fair some grit
Condition cold after 72 hours

Notes on Wet Test:

Notes on Dry Test:

[fol. 752] Plaintiff's Exhibit 79

Test Department

Lot No. 25 Date,

Wet Test from Process:

From Tank No. Amt.

Method of test
Ratio of test
Viscosity
Color Reaction
Condition when cold Dirt
Condition cold after 72 hours

Finished Dry Test:

From Lab. Kiln Date, 9/23/04

Moisture
Method of test L. S.
Ratio of test 10 ozs.: 1 gal.
Viscosity 25-25 jelat 75° C.
Color yellowish Reaction neutral
Body good Dirt O. K.
Condition when cold liquid. Dissolving some grit
Condition cold after 72 hours Solid

Notes on Wet Test:

Notes on Dry Test:

10# sample taken from tank 7 dried in Lab. Kiln.

[fol. 753] Plaintiff's Exhibit 79

Test Department

Lot No. 25 Date,

Wet Test from Process:

From Tank No. Amt.

Method of test
Ratio of test

Viscosity
Color Reaction
Condition when cold Dirt
Condition cold after 72 hours

Finished Dry Test:

From Lab. Kiln Date, 10/8/04

Moisture
Method of test D. J.
Ratio of test 10 ozs.: 1 gal.
Viscosity 52-54-55
Color O. K. Reaction neutral
Body O. K. Dirt O. K.
Condition when cold livery Dissolving fair
Condition cold after 72 hours solid

Notes on Wet Test:

Notes on Dry Test:

[fol. 754] Plaintiff's Exhibit 79

Test Department

Lot No. 25 Date, 10 14 04

Wet Test from Process:

From Tank 5 Tank No. Amt.

Method of test L. S.
Ratio of test 10:1
Viscosity 16-16
Color Yellow Reaction neutral
Condition when cold liquid Dirt O. K.
Condition cold after 72 hours livery

Finished Dry Test:

From Date,

Moisture
Method of test
Ratio of test

Viscosity	
Color	Reaction
Body	Dirt
Condition when cold	Dissolving
Condition cold after 72 hours	

Notes on Wet Test:

1 gal. neut. with bicarb. soda

Notes on Dry Test:

[fol. 755] Plaintiff's Exhibit 79

Test Department

Lot No. 25-5 Date, 11/12/04

[Wet Test from Process:¡* Dry

From W. H. Tank No. Amt.

Method of test	D. J.		
Ratio of test	10 oz.: 1 gal.		
Viscosity	21-21		
Color	O. K.	Reaction	Neutral
Body	O. K.		
Condition when cold		Dirt	Some
Condition cold after 72 hours		Diss.	Fair

[*Erased in copy.]

Plaintiff's Exhibit 79

Test Department

Lot No. 25-7 Date, 11/12/04

[Wet Test from Process:]* Dry

From Racks		Tank No.	Amt.
Method of Test	D. J.		
Ratio of test	23-23		
Viscosity	O. K.		
Color	O. K.	Reaction	Neutral
Body	O. K.		
Condition when cold		Dirt	Some
Condition cold after 72 hours		Diss.	Fair

Plaintiff's Exhibit 79

Finished Dry Test:

Tank Report

Lot No. 25

Tank No.	7	Inches	44	Density	11	Date	6/12/04
"	5	"	31	"	16	"	10/9/04
"	.....	"	.....	"	.....	"	.....
"	.....	"	.....	"	.....	"	.....
"	.....	"	.....	"	.....	"	.....
"	.....	"	.....	"	.....	"	.....

—— ——, Tank Foreman.

[*Erased in copy.]

[fol. 756] Plaintiff's Exhibit 79

Process Record

Tank No. 1 Record of Lot 35 Date received Oct. 12—

Gross amount from warehouse not weighed Kind sweepings

Estimate of sieve loss——— Net———

20862# Inches of liquor 45 Density 10°

When pumped into special dept.

Treated as Below

				Lbs.	Time	Date	Temp.	Dens.
	Tank No.	4	Drew off filled		6:30-8 A	10/13 & washed 10/14		
5894#	"	" 10	H. C. L.	147#	12:45 A	10/15		17° B.
			H_2SO_4	29#	2:10 P	" "		" "
12294#	"	" 11	H. C. L.	307#	1:30 P	10/15		15½°
			H_2SO_4	61#	2:30 P	" "		

825

3	Tank No.	3	Pumped to #3	8:30-11:30 A	10/16 equal amt. of water added	
3	" "	3	Bicarb. 250#	8:00-A. 10 A	10/20 neutralized	8½° B.
	"					
	"					
	"					
	"					

Pumped to Tank No. 13 Date 10/20/04.
Tabled 10/20/04
Into Kilns 10/22/04 Temp. 160° F.
10/26
Dumped to Hoppers Mixed with lot 37 to make #41
Packed, Date 10/26 Lbs. Moisture
Viscosity, W. House Sample By
Viscosity, Raw-Mat. Sample By
Loss
Sold to

[fol. 757] Plaintiff's Exhibit 79

Test Department

Lot No. 35 Date 9/4/07 Time 8 a. m.

From warehouse sample Method of Test L. S.
Ratio of test 10 oz.: 1 gal. H_2O Viscosity 18 & 18
Color milky Dirt very little
Reaction neut. to Pheno. & Methlo.
Body Dissolving readily
Condition when cold After hrs.
Neutralized with To
Notes:

Plaintiff's Exhibit 79

Test Department

Lot No. 25 Date 9/3/07 Time 5:15 p. m.

From warehouse sample in lab. Method of test L. S.
Ratio of test 10 oz. S to 1 gal. H_2O Viscosity 16½ & 16½
Color thin milky Dirt some
Realtion neut. to Pheno &Methlo
Body Dissolving readily
Condition when cold After hrs.
Neutralized with To
Notes: Viscosimeter samp. half way between 16 & 17 3 times in succession

[fol. 758] Plaintiff's Exhibit 79

Test Department

25-5 & 25-7
Lot No. 25 Date 10/19/04 Time

From Lab. kiln Method of test
Ratio of test 10 oz.: 1 gal. == Viscosity 17-17
W-H = 21-21 same
" " 23-23 "
25-5 & 25-7
Color Dirt
Reaction neutral
Body Dissolving

Condition when cold After hrs.
Neutralized with To
Notes:

Plaintiff's Exhibit 79

Test Department

Lot No. 35 Date, 10/16/04

Wet Test from Process:

From Tank 10-11 Tank No. Amt.
Method of test L. S.
Ratio of test 9:1
Viscosity 17-17
Corn yellow Reaction neutral
Condition when cold liquid Dirt some dirt
Condition cold after 72 hours solid

Finished Dry Test:

From Date
Moisture
Method of test
Ratio of test
Viscosity
Color Reaction
Body Dirt
Condition when cold Dissolving
Condition cold after 72 hours

Notes on Wet Test:

1 gal. neut. with Na O. H.

Notes on Dry Test:

Plaintiff's Exhibit 79

Process Record

Tank No. 10 & 11 Record of lot 38 Date 10/17/04

Gross amount from warehouse 17,520 Kind Lot 23

Estimate of sieve loss Net 17,520

16,907# = 10 & 11

Inches of liquor Density

When pumped into special dept.

Treated as Below:

		Lbs.	Time	Date	Temp.	Dens.
Tank No. 10						
4,987	H. C. L. 2½	124½#	2:30P.	10/17		14° B.
	H_2SO_4 ½	25#	3:00P.	" "		"
11,920 11	H. C. L. 2½	298#	5:30P.	10/17		16° B.
	H_2SO_4 ½	60#	6:30P.	" "		"
10 & 11	Heat on		6:30P.	10/17	Heater 52 C.	
	Heat off		3:30P.		Heater 52 C.	
				10/18	Tanks 50 C.	
	Dropped to #2		3P-5P	10/18	tank filled water	
	Drew off		3P.	10/20	filled and washed	
	" "		3P.	10/22	" "	
	" "		8A.	10/24	& stirred	

51—285

828

	Na O H 10#	9A.	10/24 neutralized
15,321	Pumped to tank No. 13 Date 10/24/04		
	Tabled 10/24/04		
#38–17,520	Into Kilns 10/25/04 Temp. 160° F.		
#39–13,758	Dumped to hoppers 10/28/04		
Tot. 31,278#	Packed, date See #43 Lbs. Moisture		
	Viscosity, W. House sample By		
#38–15,321	Viscosity, Raw-Mat, sample By		
#39–12,172	Loss		
Tot. 27,493	Sold to		

[fol. 760] Plaintiff's Exhibit 79

Test Department

Lot No. 38 Date, 10/18/04

7 a. m.

Wet Test from Process:

From tank 10-11 Tank No. Amt.

Method of test L. S.
Ratio of test 4:1
Viscosity 31-33
Color yellow Reaction neutral
Condition when cold solid pan Dirt O. K.
Condition cold after 72 hours solid
1 gal. neut. with soda bicarb.

Plaintiff's Exhibit 79

Test Department

Lot No. 38 Date, 10/18/04

7 a. m.

Wet Test from Process:

From tank 10-11 1 P. Tank No. Amt.

Method of test L. S.
Ratio of test 9:1
Viscosity 16-17-17
Color yellow Reaction neutral
Condition when cold liquid tube Dirt O. K.
Condition cold after 72 hours livery
1 gal neut. with soda bicarb.

[fol. 761] Plaintiff's Exhibit 79

Test Department

Lot No. 38 Date, 10/18/04

Wet Test from Process:

From tank 10-11 Tank No. Amt.

Method of test L. S.
Ratio of test 4:1
Viscosity 20-20-19
Color yellow Reaction neutral
Condition when cold solid pan Dirt O. K.
Condition cold after 72 hours solid
1 gal. neut. with bicarb. soda.

Plaintiff's Exhibit 79

Test Department

Lot No. 38 Date, 10 18 04

Wet Test from Process:

From tank 10-11 Tank No. Amt.

Method of test L. S.
Ratio of test 4:1
Viscosity 18-18
Color yellow Reaction neutral
Condition when cold solid pan Dirt O. K.
Condition cold after 72 hours solid
1 gal. neut. with bicarb. soda

[fol. 762] Plaintiff's Exhibit 79

Test Department

Lot No. 38 Date, 10/18/04

Wet Test from Process:

From tank 10-11 11:30 A. Tank No. Amt.

Method of test L. S.
Ratio of test 4:1
Viscosity 23-23
Color yellow Reaction neutral
Condition when cold solid pan Dirt O. K.
Condition cold after 72 hours solid
1 gal. neut. with Na O H

Plaintiff's Exhibit 79

Finished Dry Test:

From Lab. kiln Date, 10/19/04

Moisture
Method of test L. S.
Ratio of test 4:1
Viscosity 26-27-27
Color yellow Reaction neutral
Body good Dirt O. K.
Condition when cold Dissolving fair
Condition cold after 72 hours

Notes on Wet Test:

Notes on Dry Test:

Sample taken end of 12 hrs. treatment.

[fol. 763] Plaintiff's Exhibit 79

Finished Dry Test:

#30

From Lab. kiln — Date, 10/19/04

Moisture
Method of test L. S.
Ratio of test 9:1
Viscosity 18-18
Color yellow — Reaction neutral
Body fair — Dirt O. K.
Condition when cold — Dissolving fair
Condition cold after 72 hours

Notes on Wet Test:

Notes on Dry Test:

10# tank 10-11 neut. with bicarb. soda was taken at 9a. 10/18

Plaintiff's Exhibit 79

Test Department

Lot No. 38 — Date, 10/18/04

Wet Test from Process:

From E. Rax — Tank No. — Amt.

Method of test L. S.
Ratio of test 4:1
Viscosity 23-23
Color yellow — Reaction neut.
Condition when cold good
solid — Dirt fair
Condition cold after 72 hours — Diss. very good

[fol. 764] Plaintiff's Exhibit 79

Treated as Below:

	Lbs.	Time	Date	Depth	Dens.
Tank No. 10	4,987	3:20 P.	10/17/04	75 in.	14° B.
" " 11	11,920	5:30	10/17/04	57	16
" " 2	15,321	1:00 P.	10/24/04	39	8½
Lot #38					
=38					

Plaintiff's Exhibit 79

Finished Dry Test:

From Racks Date, 11/3/04

Moisture
Method of test L. S.
Ratio of test 4:1
Viscosity 23-23
Color yellow Reaction neutral
Body good Dirt fair
Condition when cold Dissolving fair
Condition cold after 72 hours

Notes on Wet Test:

Notes on Dry Test:

[fol. 765]

Plaintiff's Exhibit 79

Process Record

Tank No. 1 Record of lot 39
Actual Gross amount from warehouse
#13 — 6750
18 — 2130 Estimate of sieve loss
4 — 3928
#16 770 Inches of liquor 17

13578#
into When pumped into special dept. process 10/19/04

Date 10/19/04
Kind Lot 18 W-H
" 13 "
Tank 16 Lot 31 tails
" 4 " 38 left over
Density 15¼ net 13578#

Treated as Below:

		Lbs.	Time	Date	Temp.	Dens.
Tank No. 10	H. C. L.	74#	1:30 P.	10/19		14° B.
3857	H_2SO_4	15#	2:00 P.	" "		"
11	H. C. L.	148#	2:00 P.	10/10		14° B.
8977	H_2SO_4	29#	2:30 P.	10/19		"
10	H. C. L.	38½#	7:15 A.	"/21		13° B.
11	H. C. L.	89½#	"	"		13° B.

10 & 11 { Heat started 1:40 P. / " stopped 5:30 P. / " Started 8: A. / " stopped 5:30 P. / " started 6:35 A. / " stopped 5:30 P.

#4 Pumped to #4 8A-10A

Pumped to tank No. Date

Centrifugled

Into kilns Temp.

Dumped to hoppers

Packed date Lbs. Moisture

Viscosity, W. house sample By

Viscosity, raw-mat. sample By

Loss

Sold to

10/19 Heater 52 C.
" 54 C.

10/21 Heater 54 C.
" " Tanks 51 C.

10/22 Heater 56 C.
" " Tanks 53 C.

10/24 filled and let settle

[fol. 766] Plaintiff's Exhibit 79

Process Record

Tank No. 4 Record of lot 39 (Continued) Date 10-19-04
Gross amount from warehouse Kind
Estimate of sieve loss Net
Inches of liquor Density
When pumped into special dept.

Treated as Below:

	Lbs.	Time	Date	Temp.	Dens.
Tank No. 4 Drew off		4:30 A.	10/26		
Stirred up		6:30 "	"		
Soda Bi-Cb	220#	8:30	"	Neutralized	

12172# Pumped to tank No. 13 Date 10/26/24
Tabled 10/26/04
Into kilns 10/28/04 Temp. 160°
Dumped to hoppers 10/31
Packed, date see #43 Lbs. Moisture
Viscosity, W. house sample By
Viscosity, Raw-mat. sample By
Loss
Sold to

[fol. 767] Plaintiff's Exhibit 79

#39.

Finished Dry Test:

From Racks Date, 11/3/04
Moisture
Method of test L. S.
Ratio of test 4:1
Viscosity 20-20
Color yellow Reaction neutral
Body good Dirt some dirt
Condition when cold solid "Pan" 30 min. Dissolving O. K.
Condition cold after 72 hours.

Notes on Wet Test:

Notes on Dry Test:

Plaintiff's Exhibit 79

Treated as Below:

	Lbs.	Time	Date	Depth.	Dens.
Tank No. 1	12195#	10:15 A	10/19	17 in.	15-1/4 °B
" " 4	3928	9 A	10/19	10 in.	8-1/2
" " 10	3857	12:50	10/19	58 in.	14° B
" " 16	770	9:30 A	10/19	39 in.	4° B
" " 11	8977	12:50	10/19	50 in.	14° B
" " 4	12172#	7:35 A	10/26	32 in.	8° B

Lot #39

[fol. 768] Plaintiff's Exhibit 79

Test Department

Lot No. 39 4-P. M. Date, 10/19/04

Wet Test from Process:

From Tank 10-11 Tank No. Amt.

Method of test L. S.
Ratio of test 4:1
Viscosity too thick to test
Color brown Reaction neutral
Condition when cold solid Dirt fair
Condition cold after 72 hours
1 gal. neut. with bi-carbonate soda

Plaintiff's Exhibit 79

Test Department

Lot No. 39 7 A Date, 10/20/04

West Test from Process:

From Tank 10-11 Tank No. Amt.

Method of test L. S.
Ratio of test 4:1
Viscosity 23-23
Color brown Reaction neutral
Condition when cold solid Dirt O. K.
Condition cold after 72 hours
1 gal. neut. with bi-carbon. soda

[fol. 769] Plaintiff's Exhibit 79

Test Department

Lot No. 39 10:45 A Date, 10/20/04

Wet Test from Process:

From tank 10-11 Tank No. Amt.

Method of test L. S.
Ratio of test 4:1
Viscosity 25-26-26
Color brown Reaction neutral
Condition when cold solid Dirt O. K.
Condition cold after 72 hours
1 gal, neut. with bi-carb.

Plaintiff's Exhibit 79

Test Department

Lot. No. 39 2:30 P. Date, 10/20/04

Wet Test from Process:

From Tank 10-11 Tank No. Amt.

Method of test L. S.
Ratio of test 4:1
Viscosity 23-23
Color yellow Reaction neutral
Condition when cold solid Dirt O. K.
Condition cold after 72 hours
1 gal. neut. with Na O.H

[fol. 770] Plaintiff's Exhibit 79

Test Department

Lot No. 39 5:30 P. Date, 10/20/04

Wet Test from Process:

From Tank 10-11 Tank No. Amt.

Method of test L. S.
Ratio of test 4:1
Viscosity 19-19
Color brown Reaction neutral
Condition when cold solid Dirt fair
Condition cold after 72 hours
1 Gal neut with Na O.H.

Plaintiff's Exhibit 79

Test Department

Lot No. 39 A A Date, 10/21/04

Wet Test from Process:

From Tank 10-11 Tank No. Amt.

Method of test L. S.
Ratio of test 4:1
Viscosity 19-19
Color brown Reaction neutral
Condition when cold solid spot plate Dirt fair
Condition cold after 72 hours
1 gal. neut. with Na O.H.

[fol. 771] Plaintiff's Exhibit 79

Test Department

Lot No. 39 11 A Date, 10/21/04

Wet Test from Process:

From Tank 10-11 Tank No. Amt.

Method of test L. S.
Ratio of test 4:1
Viscosity 18-18
Color brown Reaction neutral
Condition when cold solid Dirt fair
Condition cold after 72 hours
1 gal. neut. with Na O.H.

Plaintiff's Exhibit 79

Test Department

Lot No. 39 3 P. Date, 10/21/04

Wet Test from Process:

From Tank 10-11 Tank No. Amt.

Method of test L. S.
Ratio of test 4:1
Viscosity 18-18
Color brown Reaction neutral
Condition when cold solid Dirt O. K.
Condition cold after 72 hours
1 gal. neut. with Na O.H.

[fol. 772] Plaintiff's Exhibit 79

Test Department

Lot No. 39 5 P. Date, 10/21/04

Wet Test from Process:

From Tank 10-11 Tank No. Amt.

Method of test L. S.
Ratio of test 4:1
Viscosity 18-18
Color brown Reaction neutral
Condition when cold solid Dirt fair
Condition cold after 72 hours
1 gal. neut. with Na O.H.

Plaintiff's Exhibit 79

Test Department

Lot No. 39 6:30 A. Date, 10/22/04

Wet Test from Process:

From Tank 10-11 Tank No. Amt.

Method of test L. S.
Ratio of test 4:1
Viscosity 17-17
Color yellow Reaction neutral
Condition when cold liquid after 5 hrs. in pan
Dirt fair
Condition cold after 72 hours
1 gal. neut. with carbonate soda.

[fol. 773] Plaintiff's Exhibit 79

Test Department

Lot No. 39 8 A. Date, 10/22/04

Wet Test from Process:

From Tank 10-11 Tank No. Amt.

Method of test L. S.
Ratio of test 4:1
Viscosity 17-17
Color brown Reaction neutral
Condition when cold solid pan after 3 hrs.
Dirt O. K.
Condition cold after 72 hours
1 gal. neut. with Na O.H.

Plaintiff's Exhibit 79

Test Department

Lot No. 39 12:30 P. Date, 10/22/04

Wet Test from Process:

From Tank 10-11 Tank No. Amt.

Method of test L. S.
Ratio of test 4:1
Viscosity 17-17
Color brown Reaction neutral
Condition when cold solid Dirt
Condition cold after 72 hours
1 gal. neut. with Na O.H.

[fol. 774] Plaintiff's Exhibit 79

Test Department

Lot No. 39 2:30 P. Date, 10/22/04

Wet Test from Process:

From Crock 7 Tank No. Amt.

Method of test L. S.
Ratio of test 4:1
Viscosity 18-18
Color yellow Reaction neutral
Condition when cold solid pan Dirt O. K.
Condition cold after 72 hours
2 gal. liquor from tank 10-11 washed out acid in 3 washing sample drawn at 9:30 A.

Plaintiff's Exhibit 79

Test Department

Lot No. 39 5 P. Date, 10/22/04

Wet Test from Process:

From Tank 10-11 Tank No. Amt.

Method of test L. S.
Ratio of test 4:1
Viscosity 17-17
Color brown Reaction neut.
Condition when cold solid Dirt fair
Condition cold after 72 hours
1 gal. neut. with carbonate soda

[fol. 775] Plaintiff's Exhibit 79

Test Department

Lot No. 39 7:25 A Date, 10/24/04

Wet Test from Process:

From Tank 10-11 Tank No. Amt.

Method of test L. S.
Ratio of test 4:1
Viscosity 17-17
Color brown Reaction neutral
Condition when cold solid Dirt fair
Condition cold after 72 hours
1 gal. neut. with carbonate soda

Plaintiff's Exhibit 79

Finished Test

From Lab. kiln — Date, 10/29/04

Moisture

Method of test L. S.

Ratio of test 4:1

Viscosity 17-17

Color yellow — Reaction neutral

Body good — Dirt fair

Condition when cold liquid, solid after 5 hrs.

Dissolving O. K.

Condition cold after 72 hours

Notes on Wet Test:

Notes on Dry Test:

10# from tables dried in lab.

[fol. 776] Plaintiff's Exhibit 79

Process-Record — Lots 34-35-36-37-41-42

30 Tons

Tank No. 1 — Record of lot 42 — Date 10/27/04

Gross amount from warehouse 55 bags — Kind Lot 21

11149# Estimate of sieve loss — Net 13750

Inches of liquor 18½ — Density 13°

When pumped into special dept.

Treated as Below: — Wait for nips

	Lbs.	Time
Tank No. 10. & 11 pumped to		
" " Drew off		9 A
10 H. C. L. (2%)	60-½#	3 P-4P
3027# H_2SO_4 "	60½#	" "
9605 H. C. L. "	192#	" "
H_2SO_4 "	192#	" "
Heat on		4:30 P
" " at 60 C till 3 P		
Tanks at 58 & 59 C with covers		
Heat on again tanks 45 C 2 P		
" off		11 A
Pumped to #4		1 P 3 P
#4 drew off P		
" A		
" A		
" A		
#4 Chalk A	60#	
9829 stirred up A		
Blue 1900 C. C.		7:30

Pumped to tank No. 13
Tabled 11/11/04
Into kilns 11/14/04
Dumped to hoppers 11/16/04
Packed, date 11/19/04 Lbs. 12009
Viscosity, W. house sample
Viscosity, Raw-mat. sample
Loss to dry tables following lot
Sold to H. D. Kendall—New York 11/19

Date	Temp.	Dens.
10/27 let settle		
10/31 & refilled		14°B
"		"
"		14°B
"		"
"		14°B

" Heater up to 60 C
11/2 Pump stopped 3 P 1½
on both #11 hottest
11/3 Heater to 60 C
11/4 Tanks 59 C
11/4 filled & belt off
11/5 filled and washed
11/7 "
11/9 "
11/10 stirred up
11/10 neutralized
11/11
11/11 1-3 of 1 c. c. per
pound
Date 11/11/04

Temp. 160°F.

Moisture
By
By

[fol. 777] Plaintiff's Exhibit 79

Process-Record

Tank No. Record of Lot 43 Date Resieved
Gross amount from warehouse 31278 Kind 38 & 39
Estimate of sieve loss Not sieved Net 31278
Inches of liquor Density
When pumped into special dept.

Treated as Below

Lbs Time Date Temp. Dens.
Pumped to tank No. Date
Centrifugled
Into kilns Temp.
Dumped to hoppers
Packed, date 11 1 04 Lbs. 32480 Moisture Abt.
Viscosity, W. house sample 23-23 10-12%
By L. S. 4:1
Viscosity, Raw-mat. sample By
Loss None in either lot 38 or 39
Sold to P. M. Co. Boston Car #4

Plaintiff's Exhibit 79

Test Department

Lot No. 43 Date 11/3

Dry Test from Process:

From W. H. Sample Tank No. Amt.
Method of test L. S.
Ratio of test 4:1
Viscosity 23-23
Color yellow Reaction neut.
Body good
Condition when cold solid Dirt fair
Condition cold after 72 hours Diss. fair

[fol. 778] Plaintiff's Exhibit 79

Test Department

Lot No. 43 L Date 10/19

Dry Process:

From Lab. Kiln Tank No. Amt.
3% H. C. L.
Heat 55 C 2 hr
Method of test L. S.
Ratio of test 9:1
Viscosity 22-22
Color fair Reaction neutral
Body good Dirt fair
Condition when cold
Condition cold after 72 hours Diss. fair
For paper coating gum Too thin

Plaintiff's Exhibit 79

Finished Dry Test

#43

From W. H. Sample Date 11/3/04
Moisture
Method of test L. S.
Ratio of test 4:1
Viscosity 23-23
Color yellow Reaction neutral
Body good Dirt fair
Condition when cold solid "Pan" 30 min.
Dissolving fair
Condition cold after 72 hours.
Notes on Wet Test:
Notes on Dry Test:

[fol. 779] Plaintiff's Exhibit 79

Process Record 55-5

Tank No. 1 Record of Lot 50 Shipped as Lot 55-5
Date Resieved 11/19/04

Gross amount from warehouse 80-17240 Kind G T A
Estimate of sieve loss 12% = 1868# Net 15372
Inches of liquor Density
When pumped into special dept.

Treated as Below:

	Lbs.		Time	Date	Tempt.	Dens.
Tank No. 6 Drew off			2 P	11/23	stirred up	16¾
10 H. C. L.	151	5%	8-10 A	11/24	142	5
H_2SO_4	100		"	"	"	"
11 H. C. L.	310		"	"	13	
H_2SO_4	206		"	"	"	
				No acid. Note result		
Heat started			6:30 P	11/23	Heater to 60° C	
" off			8 A	11/24	gelatinized	
" on			12 M	"	Heater to 58 C	
" off			2 P	11/25	Tanks 56½° C	

Filled & drew off while away
Carb. soda 125# = 8:30 A 12/3 neutralized
Lot 56 pumped to 13 with #50 12/3/04
Pumped to tank No. 13 Date 12/3/04
Tabled 12/3/04
Into kilns Temp.
Dumped to hoppers
Packed, date 12/13 Lbs. 20750 Moisture
Viscosity, W. House sample 30-30 By L. S. 4:1
Viscosity, Raw-mat. sample By
Loss Gain is from tank #3 & is resieving from tank #9
Sold to 30 Bags to R. M. Winans

[fol. 780] Plaintiff's Exhibit 79

Lot No. 50

Dry Test

A. W. H. Date 12/13/04

M of test L. S.
Ratio of test 4:1
V 29-29 Reaction acid
jelat. 67° C.
Color yellow Dirt fair
Body O. K. Dissolving fair

Plaintiff's Exhibit 79

Lot 50 Dry Test

Date 12/12/04

From W. H. Sample

M. of test L. S.
Ratio of test 4:1
Vi. 30-30 jelat. 70° C.

Color yellow Reaction acid
Body good Dirt fair
Dissolving fair

[fol. 781] Plaintiff's Exhibit 79

Finished Dry Test

Lot 50

From Lab. Kiln
Lot No. 50 Date 12/16/04
Moisture
Method of test L. S.
Ratio of test 4:1
Viscosity 52 53 jelat. 67° C
Color yellow Reaction slightly acid
Body O. K. Dirt O. K.
Condition when cold Dissolving fair
Condition cold after 72 hours.

Notes on Wet Test:

Notes on Dry Test:

2# from tables dried in kiln.

Plaintiff's Exhibit 79

Finished Dry Test

Lot 50
From Racks Date 12/12/04
Moisture
Method of test L. S.
Ratio of test 4:1
Viscosity 43-43 jelat. 70° C
Color yellow Reaction acid
Body O. K. Dirt fair
Condition when cold Dissolving fair
Condition cold after 72 hours

Notes on Wet Test:

Notes on Dry Test:

[fol. 782] Plaintiff's Exhibit 79

Treated as Below:

	Lbs.	Time	Date	Depth.	Dens.
Tank No. 3		8:30 A.	12/3/04	16 in.	7½° B

Lot No. 56
Pumped to tank No. 13 Date 12/3/04

Plaintiff's Exhibit 79

Treated as Below:

	Lbs.	Time	Date	Depth.	Dens.
Tank No. 4		8:30 A	12/3/04	33 in.	7½°B

Lot No. 50
Pumped to tank No. 13 Date 12/03/04

[fol. 783] Plaintiff's Exhibit 79

Process Record

55-5 Mixed with lot 50 and shipped as lot 50

Tank No. 5 Record of lot 56 Date Resieved

Gross amount from warehouse Kind Resieved
Estimate of Sieve loss Net Tank #9
Inches of liquor Density Pulp sieved out of raw material sieved over

When pumped into special dept.

Treated as Below:

	Lbs.	Time	Date	Temp.	Dens.
Tank No. 3 Drew off			12/2		
Stirred			12/3		

Carb soda 65# 8:30 A. 12/3 neutralized
Pumped to #13 with #50 same as Lot #55-5
Pumped to tank No. 13 Date 12/3/04
Tabled 12/3/04 as Lot 50
Into kilns Temp.
Dumped to hoppers
Packed, date See next attached Lbs. Moisture
Viscosity W. house sample see lot 55-5 next attached By

Viscosity, Raw-mat. sample By
Loss
Sold to

[fol. 784] Plaintiff's Exhibit 79

Process Record

Tank No. Record of Lot 58 Date Ground Jan 7th to 16th

Gross amount from cars etc. 77950# Kind ¼ Cass.
Estimate of sieve loss estimate 20% Net 15590
Inches of liquor Density
When pumped into special dept. Jan. 18th
Caustic 1 qt. per tank
Formaldehyde 1 qt. per tank

Treated as Below:

14347# 11 Tabled

	Lbs.	Time	Date	Temp.	Dens.
Tank No. 2-3-4 & 7					
	Pumped to 13		11/17 & tabled		
14347	1 Tables to #1	6:30-2:30 P	1/18 & to 10 & 11-		15-½°B
4563 #10 H. C. L.	137#	9:45-10:45 P	"		
" H_2SO_4	91#	"	"		
#11 H. C. L. 5%	283#	"	"		
" H_2SO_4	189#	"	"		
Heat on		10 P	1/18 Heater to 60° C		
" off		5:30 P	1/20 Heater 60° Tanks 58 57½C		
Dropped to #4		7 A	1/21 tank filled & stirred		
Drew off		"	1/23 tank filled & washed		
" "		"	1/25 tank filled & washed		
" "		"	1/27 left 6" water		
Stirred up		"	"		140°
Pumped to tank No.			Date		
Centrifugled					
Into kilns		Temp.			
Dumped to hoppers					
Packed, date		Lbs.	Moisture		
Viscosity, W. House sample			By		
Viscosity, Raw-mat. sample			By		
Loss					
Sold to					

[fol. 785] Plaintiff's Exhibit 79

Process Record (Continued)

Tank No. Record of lot 58 Date resieved
Gross amount from warehouse Kind
Estimate of sieve loss Net
Inches of liquor Destiny
When pumped into special dept.

Treated as Below:

Tank No.		Lbs.	Time	Date	Temp.	Dens.
	$K_2Mn_2O_8$ (⅛%)	17½#	12 M	1/27		
	H_2SO_4	100 #	9 A	1/28		
	"	98 #	"	1/30	Did not bleach	
	"	70½	1 P	1/31		
	"	50	3 P	1/31	Bleached	
	Filled & Settled		P	2/1	& washed	
	Drew off		4 P 6 P	2/2	Filled & washed	
	" "		A	2/4	" "	
	" "		P	2/7	Neutral to litmus	
	Stirred up		A	2/8	Neut. to litmus & Methyl-orange	

$MgCo_3$ 40# (¼%)	11:30 A	2/8	To get white color	
H_2SO_4 5#	12:30 P	"	Neutralized	

Pumped to tank No. #13 9 A Date 2/8/05
Tabled 2/8/05
Into kilns 2/9 Temp.
Dumped to hoppers 2/12
Packed, date 2/15 Lbs. 11760 = 15.5 Moisture
Viscosity, W. house sample By
Viscosity, Raw-mat. sample By
Loss 4.5% in process
Sold to

[fol. 786] Plaintiff's Exhibit 79

Test Department

9:00 a.m.

Lot No. 58 Date 2/15/05

Wet Test from Process:

From W. H. Tank No. Amount

Method of test L. S.
Ratio of test 9:1
Viscosity 15 & 16
Color good Reaction
Condition when cold liquid Dirt
Condition cold after 24 hours

Plaintiff's Exhibit 79

Finished Dry Test

From Lot 58 W. H. Sample Date 2/18

Moisture
Method of test D. J.
Ratio of test 36 oz. starch to 3 gal. water=12 oz. to 1 gal.
Viscosity 15-15
Color good Reaction neutral
Body " Dirt some
Condition when cold Dissolving very good
Condition cold after 72 hours

Notes on Wet Test:

Notes on Dry Test:

Color much better than Lot 60 and little gum if any.

[fol. 787] Plaintiff's Exhibit 79

Test Department

7:15 a. m.

Lot No. 58 Date, 1/21/05

Wet Test from Process:

From 10 & 11 Tank No. Amount

Method of test L. S.
Ratio of test 4:1
Viscosity 16 & 17
Color yellow Reaction neut.
Condition when cold Dirt
Condition cold after 72 hours
Neut. with Carb. of Soda

Plaintiff's Exhibit 79

Test Department

5 p. m.

Lot No. 58 Date, 1/19/05

Wet Test from Process:

From 10 & 11 Tank No. Amount

Method of test L. S.
Ratio of test 4:1
Viscosity 16-17
Color yellow Reaction neut.
Condition when cold liquid Dirt
Condition cold after 72 hours Solid over night
Neut. with carb. of soda

[fol. 788] Plaintiff's Exhibit 79

Test Department

5:00 p. m.

Lot No. 58 Date, 1/20/05

Wet Test from Process:

From 10 & 11 Tank No. Amount

Method of test L. S.
Ratio of test 4:1
Viscosity 16-17
Color yellow Reaction neut.
Condition when cold Dirt
Condition cold after 72 hours
Neut. with carb. of soda

Plaintiff's Exhibit 79

Test Department

7 a. m.

Lot No. 58 Date, 1/20/05

Wet Test from Process:

From 10 & 11 Tank No. Amount

Method of test L. S.
Ratio of test 4:1
Viscosity 17-17 V.
Color yellow Reaction neut.
Condition when cold liquid Dirt
Condition cold after 72 hours
Neut. with Carb. of Soda

[fol. 789] Plaintiff's Exhibit 79

Process Record

Tank No. 11 Record of Lot 60 Date Ground 17th to 18th & 19th

Gross amount from tables 6477# Lot 59 Kind Cass.
Estimate of sieve loss Net
Inches of liquor 50½ Density 10°
When [pumped]* into special dept. 1/21

[*Word enclosed in brackets erased in copy.]

Treated as Below:

	Lbs.	Time	Date	Temp.	Dens.
Wasted some to #2					
tank account stirrer hole					
Tank No. 11 Broke up		P	1/21 & settled		
Drew off to 18"					
H_2O	7	A	1/23 & stirred up		
1st water from 198# } 3%					
chloride lime }	9	A	1/23 & bbls. refilled H_2O		
Heat on	1	P	1/23 Heater to 60 C		
" off	5	P	1/25 "	60°	55-11
					57-10
2nd water from 198#					
chloride lime	9	A	1/24		
Tank filled	5	P	1/25 Belt off		
Drew off	9	A	1/28 Filled & washed		
" "	9	A	2/1 " "		
Stirred up		A	2/2 & dropped to #2 P		
" "	7	A	2/4 to		13°

Tank No. 2

To kill the grit

2 H_2O_2 16# 10 A " Tank was then neutral

Pumped to tank No. 13 Date 2/6/05

Tabled 2/6/05

Into kilns 2/7/05 Temp.

Dumped to hoppers 2/10

Packed, date 2/13 Lbs. 5225# Moisture

Some leaked out around stirrer in #11 tank

Viscosity, W. house sample By

Viscosity, Raw-mat. sample By

Loss

Sold to

[fol. 790] Plaintiff's Exhibit 79

Test Department

4:30 p. m.

Date 2/11/05.

Lot No. 60 Thin Boiling

Wet Test from Process:

From warehouse Tank No. Amount

Method of test L. S.
Ratio of test 9:1
Viscosity 16 & 17
Color good Reaction
Condition when cold Dirt
Condition cold after 72 hours

Plaintiff's Exhibit 79

Finished Dry Test:

From Lot 60 W. H. Sample Date 2/18

Moisture
Method of test D. J.
Ratio of test 36 oz. starch 3 gal. water = 12 oz.: 1 gal.
Viscosity 17-17
Color brownish Reaction neutral
Body good Dirt some from kiln
Condition when cold Dissolving fine
Condition cold after 72 hours

Notes on Wet Test:

Notes on Dry Test:

Color before boiling quite yellow
Lots of gum in kettle
Did not come to a boil after starch went in.

[fol. 791] Plaintiff's Exhibit 79

Test Department

6:30 a. m.

Lot No. 60 Date 1/25/05.

Wet Test from Process:

From 11 Tank No. Amount

Method of test L. S.
Ratio of test 9:1
Viscosity 15 & 16
Color yellow Reaction neut.
Condition when cold liquid Dirt
Condition cold after 24 hours liquid
Neut. with carb. of soda

Plaintiff's Exhibit 79

Test Department
9 a. m.

Lot No. 60 Date 2/2/05.

Wet Test from Process:

From 11 Tank No. Amount

Method of test L. S.
Ratio of test 9:1
Viscosity 15 & 16
Color good Reaction neut.
Condition when cold Dirt
Condition cold after 72 hours

[fol. 792] Plaintiff's Exhibit 79

Test Department

5:00 p. m.

Lot No. 60 Date 1/23/05.

Wet Test from Process:

From 11 Tank No. Amount

Method of Test L. S.
Ratio of test 4:1
Viscosity 21 & 22
Color yellow Reaction neut.
Condition when cold Dirt
Condition cold after 72 hours
Neut. with chloride of lime & a few drops of carb. of Soda

Plaintiff's Exhibit 79

Test Department

6:30 a. m.

Lot No. 60 Date 1/24/05.

Wet Test from Process:

From 11 Tank No. Amount

Method of Test L. S.
Ratio of test 4:1
Viscosity 20 & 21
Color yellow Reaction neut.
Condition when cold Dirt
Condition cold after 72 hours
Neut. with chloride of lime & a little carb. of soda

[fol. 793] Plaintiff's Exhibit 79

Wet Test:

9:30 a. m.

Lot No. 60 Date 1/24/05.

From tank 11
Moisture
Method of test L. S.
Ratio of test 9:1
Viscosity 16 & 17
Color yellow Reaction neut.
Body Dirt
Condition when cold
Condition cold after 72 hours

Notes on Wet Test:

Neut. with carb. of soda

Plaintiff's Exhibit 79

Test Department

1:00 p. m.

Lot No. 60 Date 1/24/05.

Wet Test from Process:

From 11 Tank No. Amount

Method of test L. S.
Ratio of test 9:1
Viscosity 16 & 17
Color yellow Reaction neut.
Condition when cold Dirt
Condition cold after 72 hours
Neutral to begin with

[fol. 794] Plaintiff's Exhibit 79

Test Department

Lot No. 60 Date 1/24/05.

Wet Test from Process:

From 11 Tank No. Amount

Method of test L. S.
Ratio of test 9:1
Viscosity 16 & 17
Color Reaction neut.
Condition when cold Dirt
Condition cold after 72 hours

Plaintiff's Exhibit 79

Test Department

5:00 p. m.

Lot No. 60 Date 1/25/04.

Wet Test from Process:

From 11 Tank No. Amount

Method of test L. S.
Ratio of test 9:1
Viscosity 15 & 16
Color yellow Reaction neut.
Condition when cold Dirt
Condition cold after 72 hours
Neut. with carb. of soda

[fol. 795] Plaintiff's Exhibit 79

Process Record

Tank No. Record of Lot 62 Date 1/28-2/1

Gross amount from cars-2 56800 Kind Cass.
Estimate of sieve loss Net
Inches of liquor Density
When pumped into special dept.

Treated as Below:

	Lbs.	Time	Date	Temp.	Dens.
Tank No. Formaldehyde	2 qts. per tank				
Na O H	1 qt.	"	"	(dry) 2/2/05	

Pumped to tank No. 13 Date 2/2/05
Tabled 2/2/05
Into kilns 2/3/05 Temp.
Dumped to hoppers 2/6
Packed, date 2/7 Lbs. 14770 = 26% probably some gained from Lot #60
Moisture
Viscosity, W. house sample By
Viscosity, Raw-mat. sample By
Loss 2/14
Sold to W. C. R. Co. & H. C. Co. 2#17

Plaintiff's Exhibit 79

Test Department

3:30 p. m.

Lot No. 62 Regular Date 2/11/05

Wet Test from Process

From warehouse Tank No. Amount

Method of test L. S.
Ratio of test 16:1 (½# starch to 1 gal. water)
Viscosity 40 & 42
Color Reaction
Condition when cold Dirt
Condition cold after 72 hours

[fol. 796] Plaintiff's Exhibit 79

Process Record

Tank No. 1 Record of Lot 63 Date resieved 2/2/05

Gross amount from warehouse 80-17240#
Estimate of sieve loss 12% = 2064# Net 15136#
Inches of liquor Density
When pumped into special dept.

Treated as Below:

	Lots.	Time	Date	Temp.	Dens.
Tank No. 3	Sieved into	P	2/2	plus formaldehyde	
	Drew off-stirred	A	2/3	& pumped to 10 & 11	
	10 H. C. L. 133#	12-1 P	"		
	" H_2 S O_4 89#	"	"		
	11 H. C. L. 433#	"	"		
	" H_2 S. O_4 289#	"	"		
	Heat on	3 P	"	Pump broke down 5 P	
	" " Tanks to	8:30 A	2/6	Heater to 60° C.	
	" off 58° C	10:30 A	2/7	belt on till 2/8	

To #4 tank	P	2/8	& fiilled
Drew off	P	2/10 "	" & washed
" "	"	11 "	" "
" "	A	13 "	" "
" "	A	14 &	bleached
K_2Mn_2O8(1/12%)	9.2# A	2/14	
Pumped to tank No.	Date		
Centrifugled			
Into kilns			Temp.
Dumped to hoppers			
Packed, date Lbs.		Moisture	
Viscosity, W. house sample		By	
Viscosity, Raw-mat. sample		By	
Loss			
Sold to			

[fol. 797] Plaintiff's Exhibit 79

Process Record

Tank No. Record of Lot 63 Continued Date Resieved

Gross amount from warehouse Kind
Estimate of sieve loss Net
Inches of liquor Density
When pumped into special dept.

Treated as Below:

	Lbs.	Time	Date	Temp.	Dens
Ran belt on till		1 P	2/15		
H_2SO_4	100=	1 P	"		
"	50#	9:30 A	2/16		
"	50#	9 A	2/17		
Belt off		6 P	"		
"	50#	1 P	2/18	Bleached	
1 Stirred up		2 P	2/20	filled & washed	
2 " "		"	2/21	"	"
3 " "		"	2/22	"	"
4 " "		"	2/24	"	"
Drew off		7 A	2/25	& stirred to 8° B	
13 Pumped to 13		9 A	"		
" Magnesium carb.	25#		"	to neut.	
H_2SO_4	1#		"	" "	

Pumped to tank No. 13 Date 2/25
Tabled 2/25/04
Into Kilns 2/26 Temp.
Dumped to hoppers
Packed, Date 3/6 Lbs. 13,860 Moisture
Viscosity, W. House sample By.
Viscosity, Raw-mat. sample By.
Loss 7.4% Process loss
Sold to

[fol. 798] Plaintiff's Exhibit 79

Test Department

10:00 a. m.

Lot No. 63 Date 3/7/05

Wet Test from Process:

From warehouse Tank No. Amount

Method of test L. S.
Ratio of test 9:1
Viscosity 15
Color very good Reaction
Condition when cold liquid Dirt
Condition cold after 24 hours liquid

Plaintiff's Exhibit 79

Finished Dry Test:

10:30 a. m.

Lot No. 63
From warehouse

Date 3/7/05
Moisture
Method of test L. S.
Ratio of test 4:1
Viscosity 19 & 20
Color very good Reaction
Body Dirt
Condition when cold liquid Dissolving
Condition cold after 24 hours solid

Notes on wet test:

Notes on Dry Test:

[fol. 799] Plaintiff's Exhibit 79

Test Department

8:15 a. m.

Lot No. 63 Date 2/7/05

Wet Test from Process:

From 10 & 11 Tank No. Amount

Method of test L. S.
Ratio of test 4:1
Viscosity 15 & 16
Color yellow Reaction neut.
Condition when cold Dirt
Condition cold after 72 hours
Neut. with carb. of soda

Plaintiff's Exhibit 79

Test Department

1:00 p. m.

Lot No. 63 Date 2/7/05

Wet Test from Process:

From 10 & 11 Tank No. Amount

Method of test L. S.
Ratio of test 4:1
Viscosity 15 & 16
Color yellow Reaction neut.
Condition when cold Dirt
Condition cold after 72 hours
Neut. with carb. of soda

[fol. 800] Plaintiff's Exhibit 79

Test Department

2:30 p. m.

Lot No. 63 Date 2/7/05

Wet Test from Process:

From 10 & 11 Tank No. Amount

Method of test L. S.
Ratio of test 4:1
Viscosity 15 & 16
Color good Reaction neut.
Condition when cold Dirt
Condition cold after 72 hours
Neut. with magnesium

Plaintiff's Exhibit 79

Test Department

Lot No. 63 Date 2/8/05

4:00 p. m.

Wet Test from Process:

From 10 & 11 Tank No. Amount

Method of test L. S.
Ratio of test 9:1
Viscosity 15 & 16
Color yellow Reaction neut.
Condition when cold Dirt
Condition cold after 72 hours
Neut. with carb. of soda

[fol. 801] Plaintiff's Exhibit 79

Test Department

Lot No. 63 Date 3/2/05

Wet Test from Process:

From kiln Tank No. Amount

Method of test L. S.
Ratio of test 9:1
Viscosity 15-15-16
Color very good Reaction neut.
Condition when cold liquid Dirt
Condition cold after 24 hours liquid

[fol. 802] Plaintiff's Exhibit 79

Process Record

Tank No. 1 Record of Lot 66 Date resieved 2/15

Gross amount from warehouse 60 sax =
12930 G. T. A.
700 Kind sweeps
Estimate of sieve loss 1512 Net 11788
Inches of liquor 42 Density 6°B
When pumped into special dept. 2/17
For 9:1 goods liquid when cold } Treated as Below:

		Lbs.		Time		Date	Temp.	Dens.
Tank No. 5 & 6½ qt. Formaldehyde								
Drew off & pumped to 10 & 11 2/17								
3420	10	H C L	103	10:15	A	2/17		15°
		H_2SO_4	68 5%	10:35	A	"		"
8798	11	H C L	264	9:30-10	A	"		13-4/5°
		H_2SO_4	176	10:30	A	"		"
		Heat on		9	A	24 hr. 2/17	Heater to	58°C
		" off		10	A	2/18	Heater	58
							Tanks	55
								56
	3	Dropped to #3		2-3	P	2/18	stirred & filled	
		Drew off		"	P	2/20	"	"
		" "		"	P	2/21	"	"
		" "		"	P	2/22	"	"
		" "		2-3	P	2/23	plus $K_2Mn_2O_8$	2/24

Pumped to tank No. Date
Centrifugled
Into kilns Temp.
Dumped to hoppers
Packed, date Lbs. Moisture
Viscosity, W. house sample By
Viscosity, Raw-mat. sample By
Loss
Sold to

[fol. 803] Plaintiff's Exhibit 79

Process Record

Tank No. Record of Lot 66 continued Date resieved

Gross amount from warehouse Kind
Estimate of sieve loss Net
Inches of liquor Density
When pumped into special dept.

Treated as Below:

Tank No.		Lbs.	Time	Date	Temp.	Dens.
	$K_2Mn_2O_8$	13-½(1/8%)	1 P	2/24	Belt off 2/25 P to bleach	13°
3	Drew off		7 A	2/27	& partly filled & stirred	
	H_2SO_4	200#	9 A	2/27		13°
	"	75#	9:30 A	2/28		
	"	50	3:15 P	3/1	Bleached	
	Filled up		3-4 P	3/2	& washed	
	Drew off		7 A	3/4	filled & washed	
	" "		7 A	3/6	" "	
	" "		"	3/10	& stirred	8°
	Mg. carb.	15	"	"	to neutralize	

Pumped to tank No. 13 Date 3/10
Tabled 3/10
Into kilns 3/13/05 Temp. 160
Dumped to hoppers 3/16
Packed, date 3/17 Lbs. 12,400 = 9.8% loss sieves & process
Moisture
Viscosity, W. house sample 15-16 By L. S. 9:1
Viscosity, 20-20-19 By " 4:1
Loss
Sold to

[fol. 804] Plaintiff's Exhibit 79

Finished Dry Test:

Lot 66 3:30 p. m.
From warehouse Date 3/22

Moisture
Method of test L. S.
Ratio of test 9:1
Viscosity 15 & 16
Color very good Reaction neut.
Body poor Dirt
Condition when cold liquid Dissolving poor
Condition cold after 12 hours

Notes on Wet Test:

Notes on Dry Test:

Plaintiff's Exhibit 79

Finished Dry Test:

3:30 p. m.

Lot 66
From warehouse Date 3/22/05

Moisture
Method of test L. S.
Ratio of test 9:1
Viscosity 15 & 16
Color very good Reaction neut.
Body poor Dirt
Condition when cold liquid Dissolving very poor
Condition cold after 12 hours liquid

Notes on Wet Test:

Notes on Dry Test:

[fol. 805] Plaintiff's Exhibit 79

Finished Dry Test:

Lot 66 4 p. m.
From warehouse Date 3/22

Moisture
Method of test L. S.
Ratio of test 4:1
Viscosity 20-20 & 19
Color very good Reaction neut.
Body Dirt
Condition when cold liquid Dissolving very poor
Condition cold after 12 hours solid

Notes on Wet Test:

Notes on Dry Test:

Plaintiff's Exhibit 79

Finished Dry Test:

Lot 66 4:00
From warehouse Date 3/22

Moisture
Method of test L. S.
Ratio of test 4:1
Viscosity 20-20-19
Color very good Reaction neut.
Body Dirt
Condition when cold Dissolving very poor
Condition cold after 72 hours

Notes on Wet Test:

Notes on Dry Test:

[fol. 806] Plaintiff's Exhibit 79

Test Department

Lot No. 66 7:00 a. m. Date 2/18/05

Wet Test from Process:

From 10 & 11 Tank No. Amount

Method of test L. S.
Ratio of test 4:1
Viscosity 15 & 16
Color yellow Reaction neut. with carb. soda

Condition when cold liquid Dirt
Condition cold after 24 hours

Plaintiff's Exhibit 79

Test Department

10:00 a. m.

Lot No. 66 Date 2/18/05

Wet Test from Process:

From 10 & 11 Tank No. Amount

Method of test L. S.
Ratio of test 9:1
Viscosity 15 & 16
Color yellow Reaction neut. with carb. of soda

Condition when cold liquid Dirt
Condition cold after 72 hours

[fol. 807] Plaintiff's Exhibit 79

Process Record

Tank No. Record of Lot 67 Date resieved 2/17-
Cars—88250
Gross amount from warehouse Kind Cassava
Estimate of sieve loss Net
Inches of liquor Density
When pumped into special dept.

Treated as Below:

Qt.
½ Formaldehyde per tank
½ Caustic " "
Pumped to tank No. 13 Date 2/23
Tabled 2/23
Into kilns 2/24-2/25 Temp.
Dumped to hoppers 2/27
Packed, date 3/2 Lbs. 17955 = 20.3% Moisture
Viscosity, W. house sample By
Viscosity, Raw-mat. sample By
Loss
Sold to

Plaintiff's Exhibit 79

Test Department

Lot No. 67 1 p. m. Date 3/7/05

Wet Test from Process

From warehouse Tank No. Amount

Method of test L. S.
Ratio of test 16.1
Viscosity 69-71-& 76
Color very good Reaction
Condition when cold semi-liquid Dirt
Condition cold after 24 hours semi-liquid

[fol. 808] Plaintiff's Exhibit 79

Process Record

Tank No. 1 Record of Lot 68 Date resieved 2/23/04
Gross amount from warehouse 60 Sax, 12930# Kind G. T. A.
Estimate of sieve loss 12% = 1512# Net 11088
Inches of liquor 37½ Density 6
When pumped into special dept. 2/24/04

Treated as Below:

	Lbs.	Time	Date	Temp.	Dens.
Tank No. Drew off pumped 10 & 11	10 A		2/24	& settled	11°
10 & 11 " " & stirred up	A		2/27		22°
					from #12
Used liquor 448# (4%) of B. P. to stir added H_2O					
10 H_2SO_4	72 (2%)				16°
11 "	153 (2%)				16°
Heat on	3 P		2/27	Heater to 55 C-131'F	
" off	3 A	12	2/28	"	
" on	6:30 A	2-1/2	2/28	"	
" off	9 A	14-1/2	2/28	" Tank 48 C	
Dropped to #4	10 A		2/28 & filled		16°
4 Drew off	7 A		3/2 & stirred in own water		
H_2SO_4 (¼%) 28# 1:15 P			3/2 to kill grit		

See Lot 68 continued
Pumped to tank No. 13 Date 3/8/05
Tabled 3/8
Into kilns 3/9 Temp.
Dumped to hoppers 3/12
Packed, date 3/11 & 3/13 Lbs. 10640 = 15.5% loss sieves & process
Moisture
Viscosity, W. house sample By
Viscosity, Raw-mat sample By
Loss
Sold to L. M. P. 22 bags 3/11/05
100% H. C. L. 10:30-¾
28 per of s. 2-4 & filled up ¾
Drew off & filled 3/6
14# caustic at 16°

[fol. 809] Plaintiff's Exhibit 79

Process Record

Tank No. Record of lot 68 continued Date resieved
Gross amount from warehouse Kind
Eestimate of sieve loss Net
Inches of liquor Density
When pumped into special dept.

Treated as Below:

	Lbs.	Time	Date	Temp.	Dens.
Tank No. 4 H. C. L.	100	10:30	A 3/4		
Per of soda		28	2-4 P "	filled up	
Drew off &			7 A 3/6	filled up	
" "			" 3/8	& stirred	8°
Na O H 14# (16°)			" "	to neutralize & kill grit	

Pumped to tank No. 13 Date 3/8
Table 3/8
Into kilns 3/9 Temp.
Dumped to hoppers 3/12
Packed, date 3/11 & 3/13 Lbs. 10640 Moisture 15.5%
loss sieve & process
Viscosity, W. house sample By
Viscosity, Raw-mat. sample By
Sold to L. M. P. 22 bags 3/11

Plaintiff's Exhibit 79

Dry Test

From racks Lot 68

Moisture
Method of test L. S.
Ratio of test 9:1
Viscosity 20-21
Color good Reaction
Body good-short Dirt
Condition when cold liquid Dissolving very poor
Condition cold after 24 hours solid

Notes on Wet Test:

Notes on Dry Test:

[fol. 810] Plaintiff's Exhibit 79

Test Department

Lot No. 68 Date 3/13

Finished Dry Test:

From racks Tank No. Amount

Method of test L. S.
Ratio of test 4:1
Viscosity 30 & 31
Color good Reaction neut.
Condition when cold liquid Dirt
Condition cold after 24 hours solid Dissolving very poor

Plaintiff's Exhibit 79

Test Department

1:15 p. m.

Lot No. 68 Date 3/13

Finished Dry Test:

From racks Tank No. Amount

Method of test L. S.
Ratio of test 4:1
Viscosity 30 & 31
Color good Reaction neut.
Condition when cold liquid Dirt
Condition cold after 24 hours solid Dissolving very poor

[fol. 811] Plaintiff's Exhibit 79

Test Department

10:30 a.m.

Lot No. 68 Date 3/2/05

Wet Test from Process:

From Lab. Dry Starch Tank No. Amount

Method of test L. S.
Ratio of test 9:1
Viscosity 15
Color very good Reaction neut.
Condition when cold liquid Dirt
Condition cold after 24 hours semi-liquid
Neut. with carb. soda

Plaintiff's Exhibit 79

Test Department

7:00 a.m.

Lot No. 68 Date 2/28/05

Wet Test from Process:

From 10 & 11 Tank No. Amount

Method of test L. S.
Ratio of test 9:1
Viscosity 15
Color yellow Reaction neut.
Condition when cold liquid Dirt
Condition cold after 24 hours semi-liquid
Neut. with carb. of soda

[fol. 812] Plaintiff's Exhibit 79

Finished Dry Test:

Lot 68 1:30 p.

From W. H. Date 5/3

Moisture
Method of test L. S.
Ratio of test 4:1
Viscosity 26-26
Color very good Reaction neut.
Body thin Dirt not any
Condition when cold near solid Dissolving very poor
Condition cold after 15 hours solid

Notes on Wet Test:

Notes on Dry Test:

Plaintiff's Exhibit 79

Finished Dry Test:

Lot 68 3 P

From warehouse Date 4/27

Moisture
Method of test L. S.
Ratio of test 9:1
Viscosity 16:16
Color very good Reaction
Body thin Dirt
Condition when cold liquid Dissolving very poor
Condition cold after 24 hours near solid

Notes on Wet Test:

Notes on Dry Test:

[fol. 813] Plaintiff's Exhibit 79

Process Record

Tank No. Record of lot 69 Date resieved

Gross amount from warehouse 2 cars 30,700 Kind Cassava
Estimate of sieve loss Net Est. 20% 6,140
Inches of liquor Density
When pumped into special dept.

Treated as Below:

Tank No. 1 Pt. Formaldehyde } per tank
1 " Na O H }
Pumped to tank No. 13 Date 3/4/5
3/4/5
Into kilns 3/6/5 Temp.
Dumped to hoppers 3/8/05
Packed, date 3/9/05 Lbs. 7,050 = 22.9% yield Moisture
Viscosity, W. house sample By
Viscosity, Raw-mat. sample By
Loss
Sold to L. M. P. 3/11/05

[fol. 814] Plaintiff's Exhibit 79

Process Record

Tank No. 1 Record of Lot 70 Date resieved 3/17/05

Gross amount from warehouse 12,000 Kind Sago
Estimate of sieve loss 5% 600 Net 11,400
Inches of liquor 36 Density 6
When pumped into special dept. 3/18

Treated as Below: Veneers

		Lbs.	Time	Date	Temp.	Dens.
Tank No. 8	Drew off & stirred A			3/18	pumped to 11	18¾
11	Na_2O_2	24#	1 P	"		22
	NaOH	48#	1:30 P	"		
	Na_2O_2	24	11:25 A	3/22		
2	Dropped to #2		P	3/23 & settled		
2	Stirred up		7 A	3/28		

Pumped to tank No. 13 Date 3/28
Tabled 3/28
Into kilns 3/29 Temp.
Dumped to hoppers 4/1
Packed, date 4/6 Lbs. 10,800 = 10% sieve & process loss Moisture
Viscosity, W. house sample 19-20 By L. S. 9:1
Viscosity, Raw-mat. sample 49-40-47 By " 4:1
Loss
Sold to L. M. P. 4/17

[fol. 815] Plaintiff's Exhibit 79

Finished Dry Test:

Lot 70 4:00 P

From warehouse Date 4/5

Moisture
Method of test L. S.
Ratio of test 9:1
Viscosity 19 & 20
Color dark Reaction
Body thin Dirt
Condition when cold solid Dissolving good
Condition cold after 12 hours solid

Notes on Wet Test:

Notes on Dry Test:

Plaintiff's Exhibit 79

Finished Dry Test:

Lot 70 4:50 P.

From warehouse Date 4/5

Moisture
Method of test L. S.
Ratio of test 4:1
Viscosity 49-40-47
Color dark Reaction
Body good Dirt
Condition when cold solid Dissolving good
Condition cold after 12 hours solid

Notes on Wet Test:

Notes on Dry Test:

[fol. 816] Plaintiff's Exhibit 79

Finished Dry Test:

Lot No. 70 5:00 P

From dry kiln in lab. Date 3/20

Moisture
Method of test L. S.
Ratio of test 9:1
Viscosity 29
Color yellow Reaction neut. after drying with H_2SO_4
Body good Dirt
Condition when cold semi-liquid Dissolving good
Condition cold after 3 or 4 hours solid

Notes on Wet Test:

Notes on Dry Test:

Plaintiff's Exhibit 79

Finished Test:

Lot 70 5:30 P
From 11 Date 3/21

Moisture
Method of test L. S.
Ratio of test 9:1
Viscosity 28:29 & 30
Color yellow Reaction neut. with H_2SO_4
Body good Dirt
Condition when cold semi-liquid Dissolving
Condition cold after 3 or 4 hours solid

Notes on Wet Test:

Notes on Dry Test:

[fol. 817] Plaintiff's Exhibit 79

Test Department

10:30 a. m.

Wet Test from Process:

Lot No. 70 Date 3/21

From tank 11 Tank No. Amount

Method of test L. S.
Ratio of test 9:1 (4¼° B)
Viscosity 25 & 26
Color yellow Reaction neut. with H_2SO_4
Condition when cold semi-liquid Dirt
Condition cold after 3 or 4 hours solid

Plaintiff's Exhibit 79

Finished Test:

Wet

Lot 70 4:30 P.

From 11 Date 3/20

Moisture
Method of test L. S.
Ratio of test 9:1 (4¼° B)
Viscosity 27 & 28
Color yellow Reaction neut. with H_2SO_4
Body good Dirt
Condition when cold semi-liquid Dissolving
Condition cold after 3 or 4 hours solid

Notes on Wet Test:

Notes on Dry Test:

[fol. 818] Plaintiff's Exhibit 79

Lot 70
From lab. kiln Date

Moisture
Method of test L. S.
Ratio of test 10 oz. starch to 1 gal. water
Viscosity 23 & 24
Color yellow Reaction neut.
Body good Dirt
Condition when cold semi-liquid Dissolving good
Condition cold after 72 hours

Notes on Wet Test:

Notes on Dry Test:

Plaintiff's Exhibit 79

Test Department

Lot No. 70 9:15 a. m. Date 3/23

Wet Test from Process:

From 11 Tank No. Amount

Method of test L. S.
Ratio of test 9:1 (4¼° B)
Viscosity 23 & 24
Color yellow Reaction neut. with H_2SO_4
Condition when cold solid Dirt
Condition cold after 72 hours

[fol. 819] Plaintiff's Exhibit 79

Process Record

3/20/05

Tank No. 10. Record of lot 71 Date Not sieved

Gross amount from warehouse 30 bags 6465 Kind G. T. A.
Estimate of sieve loss Net 6510
Inches of liquor 53 Density 21
When pumped into special dept. 3/21

Treated as below:

	Lbs.	Time	Date	Temp.	Dens.
Tank No. 10 30 Sax	6510	A	3/20		22
Na_2O_2	16	1:20-7P	"		"
Na O H	32	1:25-7:40	"		"
Na_2O_4	16	10 A-5:25P	3/22		
Dropped to #4		P	3/23		
Stirred up		A	3/25		6½

Table fine—unsieved G. T. A.
Pumped to tank No. 13 Date 3/25
Tabled 3/25
Into kilns 3/27 Temp.
Dumped to hoppers 3/29
Packed, dated 4/1 Lbs. 5,400 Loss=17% ? Moisture
Viscosity, W. house sample 20-21 By 9:1 L. S.
Viscosity, sample 55-55 By 4:1
Loss
Sold to L. M. P. 4/17

[fol. 820] Plaintiff's Exhibit 79

Finished Dry Test:

11 A

Lot 71
From warehouse Date 4/1/05

Moisture
Method of test L. S.
Ratio of test 9:1
Viscosity 20 & 21
Color good Reaction neut.
Body good Dirt
Condition when cold Dissolving good
Condition cold after 2 hours solid

Notes on Wet Test:

Notes on Dry Test:

Plaintiff's Exhibit 79

Finished Dry Test:

Lot 71 11 a. m.
From warehouse

Moisture
Method of test L. S.
Ratio of test 4:1
Viscosity 55-55
Color good Reaction neut.
Body good Dirt
Condition when cold Dissolving good
Condition cold after 2 hours solid

Notes on Wet Test:

Notes on Dry Test:

[fol. 821] Plaintiff's Exhibit 79

Finished Dry Test:

10 a. m.

Lot 71
From 10 Date 3/23
Moisture
Method of test L. S.
Ratio of test 9:1 (4¼° B)
Viscosity 23 & 24
Color very good Reaction neut. with H_2SO_4
Body good Dirt
Condition when cold semi-liquid Dissolving
Condition cold after 72 hours

Notes on Wet Test:

Notes on Dry Test:

Plaintiff's Exhibit 79

Finished Wet Test

Lot 71 5:30 p.
From 10 Date 3/21
Moisture
Method of test L. S.
Ratio of test 9:1
Viscosity 1 min. & 35 c 1^{m} c 42^{sec}
Color good Reaction neut. with H_2So_4
Body good Dirt
Condition when semi-liquid Dissolving
Condition cold after 12 hours semi-liquid

Notes on Wet Test:

Notes on Dry Test:

[fol. 822] Plaintiff's Exhibit 79

Notes on Dry Test:

11a.

From Lot 71 Trails Date 4/27

Moisture
Method of test L. S.
Ratio of test 9:1
Viscosity 22-17 & 18
Color fair, little dark Reaction
Body thin Dirt
Condition when cold nearly solid Dissolving good
Condition cold after 72 hours solid

Notes on wet test:

Notes on dry test:

Plaintiff's Exhibit 79

Test Department

10. m.

Lot No. 71 Date 3/21

Wet test from Process:

From Tank 10 Tank No. Amount

Method of test L. S.
Ratio of test 9:1 (4¼°B)
Viscosity 2 min. & 15 Sec.
Color good Reaction neut. with H_2SO_4
Condition when cold semi-liquid Dirt
Condition cold after 12 hours semi-liquid

[fol. 823] Plaintiff's Exhibit 79

Process Record

Tank No. 1 Record of Lot72 Date received 3/18/05
Gross amount from warehouse 100 bags
12000 King Sago
Estimate of sieve loss 5% = 600# Net 11400 sieved 3/18
Added 189 bags 22680# on 3/28
Inches of liquor less 5% Density 21545 " 3/28

When pumped into special dept. Total 31946 lbs.

Treated as Below: Veneers

	Lbs.	Time	Date	Temp.	Dens.
Tank No. 8 Settled from 3/18 to 3/21 to #11 & back to #4					
3 & 4	Ran in 189 bags sieved on 3/28 & settled				
3 & 4	Drew off	7 A	3/29		
4	Resieved & ran in what was left in tanks 1 & 3 to #4				
4	B. P. (4%) 1278# (Dry)	10 A-1P	3/30 at 22°B		
4	$H_2S O_4$ (1%) 319#	2 P	" this neutralized)		
4	Tank filled	1 P and part	3/31 pumped to 13 8-1/2		
4	Blue 9000 C.C.	2 P	3/31		
B. P. & $H_2S O_4$ brought this down in 18 hrs. to 15=16 V. 9:1					

Part
Pumped to tank No. 13-13 Date 3/31-4/4
Tabled 3/31-4/4
Into kilns 4/1-4/6 Temp.
Dumped to hoppers 4/6
Packed, date 4/11 & 4/17 Lbs. 28200=Loss 18.6% Moisture
Viscosity, W. house sample By
Viscosity, Raw mater. sample By
Loss = 18.6% sieve & process
Sold to L. M. P. 4/17

[fol. 824] Plaintiff's Exhibit 79

Finished Dry Test:

From #4 Sago Date 3/31

Moisture #72
Method of test L. S.
Ratio of test 9:1
Viscosity 15-15
Color good Reaction neutral
Body fair Dirt
Condition when cold Dissolving good

Condition cold after 72 hours

Notes on wet test:

Notes on dry test:

Plaintiff's Exhibit 79

Wet:

From #4 Sago Date 3/31

Moisture Lot 72
Method of test L. S.
Ratio of test 9:1
Viscosity 15-16
Color good Reaction neutral
Body fair Dirt
Condition when cold Dissolving
Condition cold after 12 hours

Notes on wet test:

After 4% B. P. & 1% H_2SO_4

Notes on dry test:

[fol. 825] Plaintiff's Exhibit 79

Finished Dry Test:

2 P

Lot 72

From W. H. Date 5/3

Moisture Sago
Method of test L. S.
Ratio of test 4:1
Viscosity 23:24
Color fair Reaction neut.
Body little thin Dirt a little
Condition when cold solid Dissolving good
Condition cold after 15 hours solid

Notes on wet test:

Notes on dry test:

Plaintiff's Exhibit 79

Finished Dry Test:

2:50 p. m.

Lot 72

From warehouse Date 4/27

Moisture Sago
Method of test L. S.
Ratio of test 9:1
Viscosity 16:16
Color good Reaction neut.
Body thin Dirt some grit
Condition when cold liquid Dissolving good
Condition cold after 24 hours near solid

Notes on wet test:

Notes on dry test:

[fol. 826] Plaintiff's Exhibit 79

Process Record

Tank No-. 6 & 7 Record of Lot 74 Date Ground 3/21
Gross amount from last car from L. C. 16200 Kind Cassava
Estimate of sieve loss Net
Inches of liquor Density
When pumped into special dept.

Treated as Below: Veneers
Roots were quite rotten

Lbs. Time Date Temp. Dens.

Tank No. ½ Pt. Formaldehyde per tank
½ " Na O H " "
Roots were so rotten was necessary to table two times to get pumace all out
Pumped to tank No. 13 Date 3/23
Tabled 3/23—and again 3/25
Into kilns 3/27 Temp.
Dumped to hoppers 3/29
Packed, date 3/31 Lbs. 2800 = 17.3% yield Moisture
Viscosity, W. house sample 1 M-43 S. By 16:1 L. S.
Viscosity, Raw Mat. sample By
Loss
Sold to L. M. P. 4/17

Plaintiff's Exhibit 79

Finished Dry Test:

Lot 74 10:15 a.

From warehouse Date 4/1/05

Moisture
Method of test
Ratio of test
Viscosity 1 min. & 43 sec.
Color very good Reaction
Body good Dirt
Condition when cold Dissolving
Condition cold after 2 hours solid

Notes on wet test:

Notes on dry test:

[fol. 827] Plaintiff's Exhibit 79

Process Record

Tank No. 1 Record of lot 75 Date resieved 3/27

Gross amount from warehouse 70 bags 15085 Kind G.T.A.
Added 2155# from Lot 73 (10 bag)
Estimate of sieve loss 12% Net 15165#
Inches of liquor Density
When pumped into special dept.

Treated as Below:

		Lbs.	Time	Date	Temp.	Cops Dens.
Tank No. 7&8	Drew off		A	3/29 & stirred		
10 & 11	Pumped to 10 & 11		2P	"	10	16
					11	14-½
	Heat on		2:05 P	"	Heater to 55°C	
10	HCL (3%)	128#	5 P	"	Tanks 50 & 52°	
11	" "	290#	5 P	"	" " " "	8 p
Too much made alkaline in morning	Heat off		8 P	"	" " " "	
	Bi-card.	250#	8 P	3/29	Neutralize Belt on	
	" "	100#	9 P	"	" all night	
	Heat on		8 A	3/30	Heater to 120°F.	
10	Na OH (8°)	85#	11:30 A	11:30 P	3/30	do
11	"	193#	5:30 P	3/30 2 A	3/31	do
	Heat off		2 A	3/31		do
Tank 10	Per. of soda	20#	9-A-4P	3/31	(This bro't it from	
" 11	" " "	50#	10A 4P	"	(23 V to 15 V 9:1	
					(L. S. Dry	

Heat on 10 A 3/31 to 131F
" off 5 P " Belt on all night
Dumped to #2 4/1 Drew off 4/3 & washed
Drew off 4/8 stirred & added
85# H_2SO_4 to neut.

Pumped to tank No. Date 4/10
Tabled 4/10 13
Into kilns 4/11 & 4/12 Temp.
Dumped to hoppers
Packed, date Lbs. 13400 = 23.5% Loss Moisture
Viscosity, W. house sample By
Viscosity, Raw-mat. sample By
Loss = 23.5% loss sieves & process
Sold to L. M. P. 4/17

[fol. 828] Plaintiff's Exhibit 79

Finished Dry Test:

From W. H. Lot 75 Date 4/19

Moisture 1# starch to 2# H_2O
Method of test 7# H_2O plus 23 g (5%) Na O H
Ratio of test in D. J. Kettle
Viscosity would not boil until put lid on 24 V.
No gum in kettle.
Color Reaction
Body would not Dirt reboil
Condition when cold Dissolving
Condition cold after 72 hours For H. C. Co.

Notes on Wet Test:

Notes on Dry Test:

Plaintiff's Exhibit 79

Test Department

4 p.

Lot No. 75 Date 4/19

Dry Test from W. H.

From warehouse Tank No. Amount

Method of test L. S. (¾ # starch to 6¾ # water)
Ratio of test 9:1
Viscosity 15 & 16
Color yellowish Reaction neut.
Condition when cold liquid
Condition cold after 24 hours solid
Body thin when hot & cold

[fol. 829] Plaintiff's Exhibit 79

Finished Dry Test:

4:30 p.

Lot 75

From warehouse Date 4/19

Moisture
Method of test L. S.
Ratio of test 4:1
Viscosity 25 & 23
Color yellow Reaction neut.
Body good Dirt
Condition when cold solid Dissolving good
Condition cold after 24 hours solid

Notes on Wet Test:

Notes on Dry Test:

Plaintiff's Exhibit 79

Test Department

8 a. m.

Lot No. 75 Date 3/31

Wet Test from Process:

From 10 & 11 Tank No. Amount
Method of test L. S.
Ratio of test 9:1
Viscosity 23 & 24
Color yellow Reaction neut. with H_2SO_4
Condition when cold semi-liquid Dirt
Condition cold after 5 hours solid

[fol. 830] Plaintiff's Exhibit 79

Test Department

7 a. m.

Lot No. 75 Date, 4/1/05

Wet Test from Process:

From 10 & 11 Tank No. Amount

Method of Test L. S.
Ratio of test 9:1
Viscosity 15 & 16
Color yellow Reaction neut. with H_2SO_4
Condition when cold liquid Dirt
Condition cold after 72 hours

Plaintiff's Exhibit 79

Wet Test

9 a. m.

From 10 Lot 75 Date 3/30

Moisture
Method of test L. S.
Ratio of test 9:1
Viscosity 24-22/23
Color yellow Reaction alkaline
Body Dirt
Condition when cold semi-liquid Dissolving
Condition cold after 1 hr. solid

Notes on Wet Test:

Notes on Dry Test:

[fol. 831] Plaintiff's Exhibit 79

Finished Wet Test:

Lot No. 75

From 10 & 11 Date

Moisture 1 gal. starch at 4¼ neut. with $H_2S O_4$ added 88 c. c. Na O H

Method of test L. S.
Ratio of test 9:1
Viscosity 19:20
Color yellow Reaction alkaline
Body Dirt
Condition when cold semi-liquid Dissolving
Condition cold after 12 hours solid

Notes on Wet Test:

Notes on Dry Test:

Plaintiff's Exhibit 79

Test Department

9 a. m.

Lot No. 75 Date 3 30

Wet Test from Process:

From 10 & 11 Tank No. Amount

Method of test L. S.
Ratio of test 9:1
Viscosity 23 & 24
Color good Reaction neut. with $H_2 SO_4$
Condition when cold semi-liquid Dirt
Condition cold after 12 hours solid

[fol. 832] Plaintiff's Exhibit 79

Finished Dry Test:

Lot 75 7:30 a.

From lab. kiln Date 4/1/05

Moisture

Method of test L. S Ratio of test 9:1

Viscosity 15 & 16

Color yellow Dirt

Body thin Reaction neut.

Condition when cold liquid Dissolving good

Condition cold after 72 hours.

Notes on Wet Test:

Notes on Dry Test:

[fol. 833] Plaintiff's Exhibit 79

Process Record

Tank No. 1 Record of lot 76 Date resieved 4/1

Gross amount from warehouse 70 bags 15085 Kind G.T.A.

Estimate of sieve loss 12% = 1807# Net 13278

Inches of liquor Density

When pumped into special dept.

Treated as below:

	Lbs.	Time	Date	Temp.	Cops Dens.
Tank No. 7 & 8 Drew off		A	4/3	Pumped to 10 & 11	
10 H C1 3%	124#	9:30 A	4/4		14
11 H C1 3%	243	9:40 "	"		12
Heat on		7 A	4/4	Heater to 55°C	
Heater to 55°C at		8:10	Ran 1 hr. before acid		
10 Bi-carb. (92#		4:10 P	5:30)	Just neutral	
11 " " (3/4)184#		"	"	after dropping to #4	
Heat off (9 hrs)		4 P	Pump off 5:30 P.		
Dropped to #4		10 A	4/5 partly filled & settled		
Drew off (belt off again)		A	4/12 & filled & stirred to 8		

Pumped to tank No. 13 Date 4/14

Tabled 4/14 Centrifugled

Into kilns 4/16 Temp.

Dumped to hoppers 4/20

Packed, date See Lot 82 Lbs. Moisture

Viscosity, W. House sample By 9:1 - 16-17

Viscosity, sample By 4:1 - 60-61

Loss Sold to Boston

[fol. 834] Plaintiff's Exhibit 79

Test Department

1:30 p.

Lot No. 76 Date 4/27

Dry test from W. H.

From warehouse Tank No. Amount

Method of test L. S.
Ratio of test 9:1 Body thin
Viscosity 16-17-18 Dissolving—good
Color very good Reaction
Condition when cold liquid Dirt not any
Condition cold after 24 hours solid

Plaintiff's Exhibit 79

Finished Dry Test:

Lot 76 9:30 a.
From warehouse Date 5/3

Moisture
Method of test L. S.
Ratio of test 4:1
Viscosity 60-61
Color dark Reaction neut.
Body good Dirt not any
Condition when cold solid Dissolving good
Condition cold after 24 hours solid

Notes on wet test:

Notes on dry test:

[fol. 835] Plaintiff's Exhibit 79

Finished Dry Test:

7 a.

Lot 76
From lab. kiln Date 4/5

Moisture
Method of test L. S.
Ratio of test 9:1
Viscosity 18
Color good Reaction neut.
Body good Dirt
Condition when cold semi-liquid Dissolving good
Condition cold after 12 hours solid

Notes on wet test:

Notes on dry test:

Drying

Slightly acid
before drying

Plaintiff's Exhibit 79

Finished Dry Test:

Lot 76 3 p.
From lab. kiln Date 4/5

Moisture
Method of test L. S.
Ratio of test 9:1
Viscosity 17 & 18
Color good Reaction neut.
Body good Dirt
Condition when cold semi-liquid Dissolving good
Condition cold after 12 hours solid

Notes on wet test:

Notes on dry test:

Neut. before drying

[fol. 836] Plaintiff's Exhibit 79

Test Department

3:30 p.

Lot No. 76 Date 4/4/05

Wet Test from Process:

From 10 & 11 Tank No. Amount

Method of test L. S.
Ratio of test 9:1
Viscosity 20 & 21
Color good Reaction neut. with Bi-carb. soda
Condition when cold semi-liquid Dirt
Condition cold after 12 hours solid

Plaintiff's Exhibit 79

Finished Dry Test:

From lab. kiln 10 & 11 Date 4/8

Moisture Lot 76—Test for H. C. Co.
Method of test D. J. 76 Test for H. C. Co.
Ratio of test 400 g. starch(8 9#)805 g H_2O(1-7/9#) mixed together
Viscosity 6¼ " H_2O plus 23 g Na O H put in kettle
Color Boiled & starch liquor put in slowly Killed boil. Tried to boil 20 min. put in remainder & tried to boil for 20 m. more Result: Quite thin and very dark.
Condition when cold Dissolving
Condition cold after 72 hours

Notes on wet test:

Would not boil while stirring; had to keep cover on kettle to get to boil at all. Scum on kettle. Scum ⅛ " thick after dipping out liquor: semi-liquid cold. Did not try to reboil but so thick was doubtful if it would or not after cooling.

Notes on dry test:

[fol. 837] Plaintiff's Exhibit 79

Heat Report

Planters' Mfg. Co.

Lot No. 76				Remarks
Heat	#10	#11		Began boiling 7 a. m. 4/4/05
6:30 a. m.				Heater started at
7:30 "	43°C			35 and went to 55
8:10 "	55°C			in 1 hr. & 10 min.
9:10 "	55°C	126°B	114°D	124# H C L in #10
10:30 "	55	127	118	9:35 a. m. 4/4
11:30 "	55	127	119	243# H C L in #11
12:30 p. m.	55	129	122	at 9:40 a. m. 4/4
1:30 "	55	129	123	92# bi-carb. soda
2:30 "	55	129	125	in #10 4:10-5:35
3:30 "	55	129	125	184# bi-carb. in 11
4:00 "	55 Steam shut off 4:00 at 4:10-5:30			
5:30 "	Shut down 5:30			
6:30 "				
7:30 "				
8:30 "				
9:30 "				
10:30 "				
11:30 "				
12:30 a. m.				
1:30 "				
2:30 "				
3:30 "				
4:30				
5:30				

F. M. W. Tank Man

[fol. 838] Plaintiff's Exhibit 79

Process Record

Tank No. Record of Lot 80 Date re-bagged 4/18/05
Gross amount from warehouse 25-200# bags 5000#
Kind G. T. A.
Estimate of sieve loss Net
Inches of liquor Density
When pumped into special dept.

Treated as Below:

Re-bagged so as to get car out at full weight of 60,000 pounds in a hurry
Pumped to tank No. Date
Centrifugled
Into kilns Temp.
Dumped to hoppers
Packed, date Lbs. Moisture
Viscosity, W. house sample By
Viscosity, Raw-mat. sample By
Loss
Sold to L. M. P. 4/18

[fol. 839] In the United States District Court for the Northern District of Illinois, Eastern Division

In Equity. No. 127

Perkins Glue Company, Complainant,

vs.

The Solva Water Proof Glue Company, The Burch-Kane Company, Lowell R. Burch, and Thomas P. Kane, Defendants

Stipulation

It is hereby stipulated and agreed by and between the parties to the above entitled cause for the purposes of this suit only, and in order to expedite the trial thereof that

the following statement of facts is true and correct but that neither party shall be precluded from adducing additional facts not inconsistent herewith.

On and prior to January 1, 1905, L. M. Palmer had a plant at Poplar Bluff, Missouri, and comprised in the said plant was an equipment for the preparation of glue and its use for gluing veneer barrel heads. That prior to, and on January 1, 1905 the said Company was using casein glue for the purpose of gluing veneered headings; that the plant was subsequently transferred to the Brooklyn Cooperage Company. That from some time prior to January 1, 1905 until on or about the 16th day of August, 1906, Nelson Windsor was Assistant Superintendent of the said Plant at Poplar Bluff; that on last mentioned date, he left said plant; that during the period from January 1, 1905 until August 16th, 1906, said Windsor wrote letters, which were contemporaneously press copied in two regular books, which were used in the regular business of the plant. After press copying such letters the same were regularly mailed to the addresses named thereon on or about the respective dates of such letters.

The two copy books above mentioned have been inspected by counsel for the respective parties, and it is stipulated that the letters in said copy books itemized in the following list shall be transcribed by the Notary Public taking the present depositions, and certified by him, and marked as follows, that is to say:

[fol. 840] Letter from Nelson Windsor to Lowell M. Palmer, dated 2-21-05, found on page 311 of the first letter book which letter is marked Windsor letter No. 1.

Telegram ..... from same to same dated 2-21-05, page 311, marked Windsor letter No. 2.

Letter from same to same dated 2-22-05, pages 313 to 316 inclusive marked Windsor letter No. 3.

Letter from same to same dated 2-27-05, found on page 328 and marked Windsor letter No. 4.

Letter from same to same dated 3-7-05 found on page 338 marked Windsor letter No. 5.

Letter from Windsor to Perkins, dated 3-7-05, found on page 340 and marked Windsor letter No. 6.

Letter from Windsor to Palmer dated 3-16-05 and found on page 354 and marked Windsor letter No. 7.

Letter from Windsor to Palmer dated 3-23-05 and found on page 370 and marked Windsor letter No. 8.

Letter from same to same, dated 3-24-05, found on page 373, marked Windsor letter No. 9.

Letter from Windsor to Perkins, dated 3-25-05, found on page 377, marked Windsor letter No. 10.

Letter from Windsor to Palmer, dated 4-10-05, found on page 400, marked Windsor letter No. 11.

Letter from same to same, dated 4-17-05, found on page 416, marked Windsor letter No. 12.

Letter from Windsor to Day Rubber Co. dated 4-19-05, found on page 422, marked Windsor letter No. 13.

Letter from Windsor to Palmer, dated 4-22-05, found on page 430, marked Windsor letter No. 14.

Letter from Windsor to Day Rubber Co. dated 4-24-05, found on page 434, marked Windsor letter No. 15.

Letter from Windsor to Palmer, dated 4-27-05, found on page 440, marked Windsor letter No. 16.

Letter from Windsor to Whitney, dated 4-29-05, found on page 446, marked Windsor letter No. 17.

Letter from Windsor to Palmer, dated 4-29-05, found on page 448, marked Windsor letter No. 18.

Letter from same to same, dated 5-4-05, found on page 458, marked Windsor letter No. 19.

Letter from same to same, dated 5-9-05, found on page 464, marked Windsor letter No. 20.

Letter from Windsor to Casein Mfg. Co. dated 5-9-05, found on page 464, marked Windsor letter No. 21.

Letter from Windsor to Perkins, dated 5-9-05, found on page 464, marked Windsor letter No. 22.

[fol. 841] Letter from Windsor to Palmer, dated 5-11-05, found on page 469 marked Windsor letter No. 23.

Letter from Windsor to Schield Mfg. Co. dated 5-12-05, found on page 472, and marked Windsor letter No. 24.

Letter from Windsor to Davol Rubber Co. dated 5-11-05, found on page 470, marked Windsor letter No. 25.

Letter from Windsor to Palmer, dated 5-16-05, found on page 482, marked Windsor letter No. 26.

Letter from Windsor to Perkins, dated 5-17-05, found on page, 693, marked Windsor letter No. 27.

Letter from Windsor to Palmer, dated 5-17-05, found on page 483 marked Windsor letter No. 28.

Letter from Windsor to Schield Mfg. Co. dated 5-19-05, found on page 485, marked Windsor letter No. 29.

Letter from same to same, dated 5-19-05, found on page 486, marked Windsor letter No. 30.

Letter from Windsor to Singer Mfg. Co. dated 5-19-05, found on page 487, marked Windsor letter No. 31.

Letter from Windsor to Palmer, dated 5-22-05, found on page 490, marked Windsor letter No. 32.

Letter from Windsor to Schields, dated 5-22-05, found on page 491, marked Windsor letter No. 33.

Letter from same to same, dated 5-25-05, found on page 500, marked Windsor letter No. 34.

Letter from Windsor to Day Rubber Co. dated 6-1-05, found on page 508, marked Windsor letter No. 35.

Letter from Windsor to Schield Mfg. Co. dated 6-5-05, found on page 517, marked Windsor letter No. 36.

Letter from Windsor to Meyer Bros. Drug Co. dated 6-12-05, found on page 528, and marked Windsor letter No. 37.

Letter from Windsor to Palmer, dated 6-12-05, found on page 527 and marked Windsor letter No. 38.

Letter from Windsor to Meyer Bros. Drug Co. dated 6-6-05, found on page 520, and marked Windsor letter No. 39.

Letter from Windsor to Day Rubber Co. dated 6-6-05, found on page 520, and marked Windsor letter No. 40.

Letter from same to same, dated 6-12-05, found on page 528, and marked Windsor letter No. 41.

[fol. 842] Letter from Windsor to Palmer, dated 6-19-05, found on page 542, and marked Windsor letter No. 42.

Letter from Windsor to Wilts Veneering Co. dated 6-19-05, found on page 543, and marked Windsor letter No. 43.

Letter from Windsor to Perkins, dated 6-19-05, and found on page 540, and marked Windsor letter No. 44.

Letter from Windsor to Wilts Veneering Co. dated 6-19-05, found on page 543, and marked Windsor letter No. 45.

Letter from Windsor to Palmer, dated 6-19-05, and found on page 544, and marked Windsor letter No. 46.

Letter from Windsor to Schield Mfg. Co. dated 6-22-05, found on page 552, and marked Windsor letter No. 47.

Letter from Windsor to Schield Mfg. Co. dated 7-8-05, found on page 569, and marked Windsor letter No. 48.

Letter from Windsor to Day Rubber Co. dated 7-11-05, found on page 574, and marked Windsor letter No. 49.

Letter from Windsor to Palmer, dated 7-22-05, found on page 589, and marked Windsor letter No. 50.

Letter from Windsor to Schield Mfg. Co. found on page 597, and marked Windsor letter No. 51, dated 7-31-05.

Letter from Windsor to Palmer, dated 8-3-05, found on page 609, and marked Windsor letter No. 52.

Letter from Windsor to Perkins, dated 7-31-05, found on page 519, and marked Windsor letter No. 53.

Letter from Windsor to Palmer, dated 8-3-05, found on page 609, and marked Windsor letter No. 54.

Letter from Windsor to Perkins, dated 8-4-05, found on page 614, and marked Windsor letter No. 55.

Letter from Windsor to Palmer, dated 8-9-05, found on page 611, and marked Windsor letter No. 56.

Letter from Windsor to Perkins, dated 8-10-05, found on page 624, and marked Windsor letter No. 57.

Letter from Windsor to Perkins, dated 8-14-05, found on page 622, and marked Windsor letter No. 58.

Letter from Windsor to Perkins, dated 8-19-05, found on page 644, and marked Windsor letter No. 59.

[fol. 843] Letter from Windsor to Perkins, dated 9-22-05, found on page 668, and marked Windsor letter No. 60.

Letter from Windsor to Schield Mfg. Co. dated 9-27-05, found on page 676, and marked Windsor letter No. 61.

Letter from Windsor to Palmer, dated 9-23-05, found on page 670, and marked Windsor letter No. 62.

Second Book—

Letter from Windsor to Palmer, dated 10-28-05, found on page 15, and marked Windsor letter No. 63.

Letter from Windsor to Green, dated 11-1-05, found on page 21, and marked Windsor letter No. 64.

Letter from Windsor to Perkins, dated 11-8-05, found on page 26, and marked Windsor letter No. 65.

Letter from Windsor to Schield Mfg. Co. dated 2-22-06, found on page 145, and marked Windsor letter No. 66.

Letter from same to same, dated 3-6-06, found on page 165, and marked Windsor letter No. 67.

Letter from same to same, dated 3-6-06, found on page 167, and marked Windsor letter No. 68.

Letter from Windsor to Perkins, dated 3-6-06, found on page 167, and marked Windsor letter No. 69.

Letter from Windsor to Schield Mfg. Co., found on page 177, and marked Windsor letter No. 70, dated 3-8-06.

Letter from Windsor to Palmer, found on page 179, dated 3-12-06, and marked Windsor letter No. 71.

Letter from Windsor to Schield Mfg. Co. dated 3-14-06, found on page 181, and marked Windsor letter No. 72.

Letter from Windsor to Waynesville Wood Mfg. Co. dated 5-7-06, found on page 230, and marked Windsor letter No. 73.

Letter from Windsor to Parker, dated 6-30-06, found on page 284, and marked Windsor letter No. 74.

Letter from same to same, dated 7-10-06, found on page 291, marked Windsor letter No. 75.

Letter from Windsor to Perkins, dated 3-29-05, found on page 384, and marked Windsor letter No. 76.

Letter from Windsor to Palmer, dated 3-25-05, found on page 385 and marked Windsor letter No. 77.

It is further stipulated and agreed that the paper hereto annexed marked by the Notary, "Walker Exhibit" is a true and correct transcript of the journal entries and the ledger entries in the regular books of accounts kept by the Walker-[fol. 844] Garetson Manufacturing Company, during the year 1905 and that the said entries were regularly made in said books on or about the dates stated in said exhibits.

It is further stipulated that the annexed paper, marked Tank invoice is a true and correct invoice for two tanks delivered by Walker-Garetson Manufacturing Company to the Poplar Bluff Plant of L. M. Palmer on or about April 1, 1905; and that the voucher thereto annexed is a true and correct copy of the original voucher now annexed to the original invoice, and that the same was made out in the regular course of business on or about the date thereon.

It is further stipulated that the papers hereto annexed and marked by the Notary, taking these depositions, Schields invoices, Nos. 1, 2, 3, 4, 5, 6 respectively are true and correct and complete copies of invoices for goods re-

ceived by Lowell M. Palmer shortly after the respective dates thereon, and that the vouchers annexed to said copies of invoices respectively are true and correct copies of vouchers attached to the original invoices and that said vouchers were made out on or about the respective dates appearing thereon; and that the goods to which said invoices and vouchers relate and which are described or referred to therein as "76-98 Soda," "Solvent" or "Soda" was commercial caustic soda.

It is further stipulated and agreed that the papers hereto annexed and marked by the Notary taking these depositions, Perkins Invoices, Nos. 1, 2, 3, 4, 5 and Perkins Voucher, are correct and complete copies of invoices for goods received by Lowell M. Palmer shortly after the respective dates thereon, and of the vouchers therefor; and that said voucher was signed by Nelson Windsor on or about the date thereon.

It is further stipulated that the papers hereto annexed and marked by the Notary, Perkins Letters Nos. 1 to 24, respectively, are full, true and complete copies of original letters now in the files of the Brooklyn Cooperage Company at the office of the Poplar Bluff Plant thereof; and that the said original letters were signed by F. G. Perkins and were received at the said plant in due course of the mails after the respective dates thereon.

It is further stipulated and agreed that the above mentioned copies of letters, telegrams, invoices, vouchers and papers shall be admissible in evidence in the trial of this case, and if introduced on behalf of either party they shall be received and used with the same force and effect as the original letters would have been received and used if duly [fol. 845] and fully proved. Such copies, however, shall be subject to correction at any time if error shall appear therein, it being the intention of this stipulation to waive all objections to the formal proof of such letters, telegrams, invoices, vouchers, and paper, but to reserve all other objections thereto.

It is further stipulated and agreed that the two copy books hereinbefore mentioned, and the invoices and vouchers, and the original Perkins Letters of which copies are herewith provided, are in the custody of the Brooklyn Cooperage Company, at Poplar Bluff, and that said Company shall retain the custody thereof.

It is further stipulated that the veneer heading department of the above mentioned plant, at Poplar Bluff, was shut down from about August 24, 1905, to on or about November 13, 1905, at which time it resumed operation; and that said department was again shut down from on or about the 8th day of August, 1906, until on or about May 5, 1907.

It is further stipulated and agreed that as early as the year 1905 considerable quantities of Cassava Flour (whether previously treated or untreated is left open to proof) were sold and shipped to said Palmer Plant, at Poplar Bluff, by Perkins or his Company for use in the preprartion of an adhesive for gluing up wood veneer in making barrel heading, and were so used at said plant, and that considerable quantities of the heading so made were shipped from said plant to be used in the making of sugar barrels and were actually used for that purpose, and that said Perkins received payment for said cassava flour.

It is further stipulated and agreed that as early as the year 1905, considerable quantities of Caustic Soda were shipped to the said plant at Poplar Bluff, to be used as solvent in the preparation of the adhesive used in making said sugar barrel heading, and that such caustic soda was so used; and that the barrel heading prepared with such adhesive was shipped out from the Palmer plant in considerable quantities.

It is further stipulated and agreed that in April 1905, Mr. F. G. Perkins was at the Poplar Bluff Plant of L. M. Palmer and at that time purchased rubber gloves for the men who were engaged in the handling of the veneered heading in the glue room and that thereafter the men used these gloves in and about their work and that from time to time thereafter new rubber gloves were bought for the purpose. [fol. 846] It is further stipulated and agreed that this stipulation shall be signed by counsel and returned by the Notary together with the copies of the papers mentioned herein under the certificate of said Notary.

Defendants' Exhibit Windsor Letter No. 1

Poplar Bluff, Mo., 2-21-'05

Lowell M. Palmer, Esq., 184 Front St., New York City.

Dear sir: Your telegram of this date reading as follows: "Wire what success you are having with the Perkins new glue" received, and I wired you as per enclosed copy. Perkins has been over the glue pot every day since his arrival, and I think he has succeeded in adapting his glue to our requirements. He made up a batch of glue on Saturday, the 18th instant with which we glued up several bales of heading, and these heads can scarcely be cut apart with an ax, holding much better than we have ever been able to make Casein, no matter at what ratio of glue to water we used. This was the first time he succeeded in getting an A. 1 adhesion, and we only kept an approximate account of the square feet covered per pound of this glue. On Monday he mixed another batch similar to what he did Saturday, the heads glue with which we will test this evening. He is mixing more today and I am keeping very close account of the glue and water used, and will be able to report very closely as to the covering qualities of this glue as compared to Casein. I stated in my telegram that I would wire you definitely Thursday, because I wished him to make at least three batches from this formula, so that by running all three through our presses, and keeping a close count on the result, I could by averaging the three, give you more accurately the information you requested in your wire. From all appearances, I think there is no doubt but what Perkins will give us a much better adhesive result, with the same covering qualities as the Casein, or the same adhesive result with a larger covering result.

Our equipment has been a considerable handicap for Perkins, but he has made no objections, nor any excuses, but pitched in and used what we had to the best advantage he could, with the results as given above.

Yours respectfully, Nelson Windsor.

[fol. 847] DEFENDANTS' EXHIBIT WINDSOR LETTER No. 2

20 Paid. Poplar Bluff, Mo., 2-21-'05.

Lowell M. Palmer, 184 Front St., New York City:

Yours date. Adhesion A. one. Working on covering qualities which nearly equal Casein at present. Can wire you definitely Thursday. Writing.

Nelson Windsor.

DEFENDANTS' EXHIBIT WINDSOR LETTER No. 3

Poplar Bluff, Mo., 2-22-'05.

Lowell M. Palmer, Esq., 184 Front St., New York City.

DEAR SIR: Referring again to the success attained with the Perkins new glue.

I have made three tests in succession with this new glue, mixed according to the formula which Mr. Perkins worked out and pronounced O. K. The first test he made all measurements by weight with both glue and water, himself; handled the mixing himself, and adjusted the glue spreader for placing the amount of glue on the sheets in other words, handled the batch entirely himself. He placed a certain number of pounds of mixed glue in the spreader from which he glued a number of bales of heading, then carefully drew from the pot of spreader and weighed all the glue that was left, and gave me all the figures. I took his figures and calculated the covering capacity of his glue per pound, and found it to outspread Casein by 10%. The heads laid up with this first test, hold better than the heads glued with Casein on the same day.

The next test Mr. Perkins did the mixing, but I had our regular glue mixer do all the weighing of material, both glue and water, keeping a record of same for me. When the glue was mixed ready for using, I personally had it taken from the mixing kettle and weighed, then oversaw the handling of it through the glue spreaders and laying up eight bales of the heading, and personally weighed the [fol. 848] amount left in the glue spreader pot, which the rolls could not pick up. With these figures, I found the covering capacity to outspread Casein by about 10%, and

these heads 12 hours later held equally as well as those made with the first test.

The third test I had my foreman make entirely himself, Mr. Perkins giving him the formula. With his figures I found the covering capacity of the former tests substantiated, and the heads held as well as on the two former tests. The heads made with the first test, which were glued Monday, hold very much better now than they did 12 hours after being glued, showing that the glue improves in adhesive qualities as it gets older. Mr. Perkins lays much stress on the claim that his glue will hold much better 6 months after being used than it does a day or so after. I have had no chance to verify this claim, as he has only in the last four days succeeded in adapting his glue to our purposes with a satisfactory result. This glue has some advantages over the Casein as far as the handling of it is concerned. It is mixed cold and used cold, doing away with a substantial consumption of steam used in steam jacketed kettles, and making it very much easier on the hands of the boys. There is very little if any odor to it, and it can stand several days without souring or deteriorating as to adhesive qualities in the least. In two hours' time one man can mix any quantity according to the capacity of the tank, which can easily be large enough to contain one day's supply, and then be put at some other work, or in other words, it would cost me 35 cents per day to mix the glue, whereas with Casein it cost $3.25. The difference in the nature between the Casein and the Perkins glue, enables us to handle the latter from the spreader to the presses without splattering it on the floor, bolt racks, retainer racks, and other equipment in the glue room, as is done in the handling of the Casein, and owing to the lack of any offensive odor, one cleaning per week of the glue room would keep it in a better sanitary condition than six does with Casein, thus saving the necessity of having a man on every night to thoroughly clean the room, which costs me $2.00 per night. Mr. Perkins has given me the cost of this glue at Cairo, and figuring the same rate per pound on it as we pay on Casein from Cairo here, I have ascertained the cost of this glue laid down here at this point. I have therefore made a list of figures, which I herewith enclose, showing exactly the comparison as to the cost between the Casein and the

Cassava. The adhesive qualities of the cassava are better than those of the Casein, as formerly stated. I might add [fol. 849] that this new glue sets quickly enough that our present supply of retainers will handle our full capacity of heading, as well as when using Casein, and there is no reason why this glue cannot be used for our heading, if you so wish, as far as the tests and the length of time I have had for making same could show.

Yours respectfully, Nelson Windsor.

Encl.
C.

P. S.—The two tanks necessary to handle cassave would in no way interfere with our present equipment and one day's notice would suffice to change from one kind to another of glue.

Comparative Cost Sheet of Casein versus Cassava

100 lbs. Casein at 7¾c Cairo, plus 1 10c to Bluff	$7 85
10 lbs. Ammonia at 6 cts. at Bluff	60
Total per 100 lbs	$8 45
100 lbs. Cassave at 7-15 100c Cairo, plus 1 10c to Bluff	7 25
25 lbs. water-proofing at 3 cts. delivered at Bluff	.75
10 lbs. Solvent at 3½c	35
	$8 35

Average run of glue per day 2,000 lbs.
10% saving due to increased spreading capacity.

200 lbs. at $8.35	$16 70
2,000 lbs. at 10c per hundred saving in cost	2 00
	$18 70
Present cost in handling Casein per day	5 25
" to handle Cassave	75
	$4 50
Total saving	$23 20

[fol. 850] DEFENDANTS' EXHIBIT WINDSOR LETTER No. 4

Poplar Bluff, Mo., 2-27-'05.

Lowell M. Palmer, Esq., 184 Front St., New York City.

DEAR SIR: I have expressed to you today several veneered heads laid up with the Perkins' new glue. I have also placed in Mo. P. car 19177 five bales of veneer heading paid up with this same material. The five bales are loaded in the doorway and are marked "Special" as per your request.

I have just received your telegram ordering the manufacture of box shooks dis-continued, and have complied with your request. I have some of this stock in the storage shed which is not matched or evened up, that is, different size shooks, having more sides than ends or tops and bottoms; others having more ends than sides or tops and bottoms, and others more tops and bottoms than sides and ends. I have just taken stock of these and am running through at present stock to match these up, in readiness for changing the thickness of material which you requested recently. I take it that you still wish this stock run through, in order to properly match the material in our storage shed.

Yours respectfully, Nelson Windsor.

C.

DEFENDANTS' EXHIBIT WINDSOR LETTER No. 5

Poplar Bluff, Mo., 3-7-'05.

Frank G. Perkins, Esq., 30 Margin St., W. Newton, Mass.

DEAR SIR: Your favor of the 3rd as well as telegram of same date received and I wish to congratulate you on your success.

I have received instructions from Mr. Palmer to install the tanks and agitators necessary for handling your glue. I obtained prices on the tanks from a local manufacturer; these tanks to be 8 ft. in diameter and 7 ft. high, with parallel sides, having patent adjustable hoops of 2" select [fol. 851] cypress. This concern wanted only $110.00 for the two tanks. I have written today to two of the largest

tank manufacturing concerns in the country for prices on this size tank, and one of these concerns I asked for a quotation on a galvanized steel tank. Would it not be better, provided the price will justify, to install steel instead of wooden tanks?

When do you expect to be at the Bluff again? My reason for asking being that I am a little at sea regarding what we need in the way of equipment for handling the glue to the tank. My foreman Baker states that on one occasion you stated that the glue should be fed in gradually, and another time holus bolus, provided that the agitator was efficient, and the lower paddles swept the bottom of the tank pretty closely. If necessary to feed in gradually, we shall have to erect a hopper over each tank of sufficient capacity to mix a tank of glue, and put the required amount of glue in same for each mixing. Furthermore, with a tank of the dimensions which we will use here, and an agitator with a mixing paddle near the bottom of the tank, and one near the top, is it necessary that we design the agitator so that it can be lifted free from the mixture as you did with the small pot? Also, how often will it be necessary to clean these tanks, and how much trouble is it to clean same, that is, will filling the tank with water and heating same good and hot, and then draining this water out, clean the tank sufficiently? Of course having the agitator run while the water is heating. Again, would we obtain a better result in cooking this glue, by placing a pipe with small holes in the same, all around the bottom of the tank close to the staves, as per enclosed sketch? My reason for mentioning this being that you spoke of your glue being inclined to cook too rapidly right at the outlet of your steam pipe in the mixer.

Hoping for an early reply, I am,

Yours sincerely, Nelson Windsor.

C.

[fol. 852] DEFENDANTS' EXHIBIT WINDSOR LETTER No. 6

Poplar Bluff, Mo., 3-7-'05.

Lowell M. Palmer, Esq., 184 Front St., New York City.

DEAR SIR: Your favor of the 3rd instant received, and I note that you have contracted for our next year's supply

of glue from Mr. Perkins. I have written for prices on the tanks necessary to handle this new glue, and will install same as soon as possible.

I have used every precaution to keep out all strangers from the veneer department.

Yours respectfully, Nelson Windsor.

C.

DEFENDANTS' EXHIBIT WINDSOR LETTER NO. 7

Poplar Bluff, Mo., 3-16-'05.

Lowell M. Palmer, Esq., 184 Front St., New York City.

DEAR SIR: Your favor of the 14th instant enclosing duplicate B. L. and invoice for Perkins glue shipped from Lake Mary, Fla., received. I notice that the entire weight, namely, 59,700 pounds, is contained in only 254 bags, making a little over 230 pounds to the bag. It would facilitate our handling of this material a great deal if Perkins would put this glue in 100 pound bags at the most, in fact we will not be able to keep the required supply of this glue in our present storage room, if it is shipped in such large bags, because the sacks cannot be stacked to any height, unless we install some mechanical hoisting device.

Yours respectfully, Nelson Windsor.

C.

[fol. 853] DEFENDANTS' EXHIBIT WINDSOR LETTER NO. 8

Poplar Bluff, Mo., 3-23-05.

Lowell M. Palmer, Esq., 184 Front St., New York City.

DEAR SIR: Your favor of the 20th instant received, enclosing U. P. Holley's letter regarding visiting this plant, and a carbon copy of your reply. I am placing more "No admittance" signs in conspicuous places around the mill, and I think with good service on the part of our watchman, and alertness on the part of the foreman, we can keep the mill free from trespassers. I return herewith Holley's letter.

Referring to your second favor of the 20th instant, will say that Mr. Perkins arrived here on the 21st instant, and

he stated that he could and would have his glue placed in 100# bags.

Yours respectfully, Nelson Windsor.

Encl.
C.

DEFENDANTS' EXHIBIT WINDSOR LETTER NO. 9

Poplar Bluff, Mo., 3-24-'05.

Lowell M. Palmer, Esq., 184 Front St., New York City.

DEAR SIR: I enclose herewtih a letter received this A. M. from the freight traffic department of the Missouri Pacific Ry. Co. of St. Louis, regarding the classification of Casein glue stock.

The second car of Perkins' glue from Lake Mary, Fla., arrived in the Poplar Bluff yards on the 22nd instant, and the freight agent of the Iron Mountain at this point called me over the telephone regarding the nature of the contents of the car, in order to place a classification on same. Perkins had shipped it from Lake Mary and the R. R. Co. at that point had accepted it as flour, but the inspector of one of the R. R. Inspection Bureaus located at Cairo, Ill., called the Poplar Bluff agent's attention to the classification, re-[fol. 854] questing him to find out more definitely what was in the car. Perkins having interviewed the local agent at this point, and explained to him that his material had been and was being shipped to different parts of the country, over different lines, under the classification of flour, and that it resembled flour in appearance, the local agent reported to the Cairo inspector that it was a flour. In the local agent's conversation with me over the 'phone, he asked that if his word was called into question, would we confirm his statement, to which I replied, we would, on the present car. In a further conversation with the agent this morning, he told me that the Cairo Inspector was very desirous to do just what was right by us regarding the classification of this stock, but wished in self protection to learn, as nearly as possible, the nature of the goods he was classifying. To this end he had obtained a sample and forwarded same to a higher office of the Western Inspection Bureau.

I have written at length to explain the situation, and wish to be advised what answer, if any, to make to the agent at this point regarding this stock, if he should request information on the receipt of future cars.

Yours respectfully, Nelson Windsor.

Encl.

C.

DEFENDANTS' EXHIBIT WINDSOR LETTER No. 10

Poplar Bluff, Mo., 3-25-'05.

F. G. Perkins, Esq., Lake Mary, Fla.

DEAR MR. PERKINS: Your letter from Memphis, Tenn., written during your enforced layover, received. We will hurry the tanks and mechanical agitators to completion as quickly as possible, and will, as per your request, wire you at Sanford, Fla., about two days before we are ready to do business.

I will have the glue from the second car, which is now in the Poplar Bluff yards, unloaded, and piled separately, according to the instructions given in your letter.

With kindest regards, I am,

Yours sincerely, Nelson Windsor.

C.

[fol. 855] DEFENDANTS' EXHIBIT WINDSOR LETTER No. 76

Poplar Bluff, Mo., 3-29-'05.

F. G. Perkins, Esq., Lake Mary, Fla.

DEAR SIR: The work on the tanks and mechanical mixers is progressing fairly well, and I expect to have everything in readiness for handling your glue by Wednesday of next week.

Yours very truly, Lowell M. Palmer, by Nelson Windsor, Asst. Supt.

C.

P. S.—You might be here Tuesday morning.

DEFENDANTS' EXHIBIT WINDSOR LETTER No. 77

Poplar Bluff, Mo., 3-30-'05.

Lowell M. Palmer, Esq., 184 Front St., New York City.

DEAR SIR: Car A. C. L. 15493 containing Perkins' veneer glue has arrived and has been unloaded, and contents check according to the copy invoice made in your office March 11th. I return herewith the copy referred to.

Yours respectfully, Nelson Windsor.

Encl.
C.

[fol. 856] DEFENDANTS' EXHIBIT WINDSOR LETTER No. 11

Poplar Bluff, Mo., 4-10-'05.

Lowell M. Palmer, Esq., 184 Front St., New York City.

DEAR SIR: Your favor of the 5th instant with invoice and shipping receipt for a car of Perkins' glue enclosed, received.

I am unable to make any definite report on Perkins' efforts in making an oil glue or water proof glue. The contractors were slow in delivering the tanks for mixing this glue, and there was some delay experienced in getting the transmission machinery for handling the power agitators in these tanks. Everything is in working operation now, however, and we will mix the first day's run of Perkins' glue today. Mr. Perkins will begin making some water and oil proof samples tomorrow, and he assured me that I could report to you further in the course of a week.

I had a visit from the Casein Company's representative, Mr. Faichney, today. He appeared to be ignorant of the fact that you were purchasing glue from any other source than the Casein Co., and I did not enlighten him any on the subject. He spoke of your orders not coming in very fast recently, and I told him we had been manufacturing boxes, which required a smaller usage of glue, and also that we were not pushing the plant any on veneer heading, owing to a dull heading market. In answer to his inquiry I told him we had some three carloads of glue on hand (not stat-

ing the kind) and that as far as I knew, when any more of their glue was needed, they would receive the order in due time. As you have not stated whether or not you wished this company acquainted with the glue situation at this plant, I followed the policy of being cordial and pleasant with Mr. Faichney as on his previous visit here, in order not to arouse any suspicion, but at the same time gave him no information whatever regarding the situation. He seemed very anxious that we continue using their stock, leaving a sample with me of some which did not need the Ammonia as solvent, which they would sell at the same price per pound as that we have been getting. He also made me a personal offer to use my influence in continuing the purchase of their glue. Of course, you know the effect of such an offer, but I mention it so that you will under-[fol. 857] stand thoroughly just how far this company is willing to go. I have explained the situation as far as I thought advisable to my glue room foreman, and I have not the least doubt in the world but that I may depend upon him to refuse any and all offers, no matter how tempting, for any information whatever regarding our business. In installing the apparatus necessary for handling the Perkins glue, I have arranged it so that the foreman does the mixing himself, so that outside of him and myself, no one at the plant, outside of the office, is familiar with the handling or the nature of the glue we are using at present.

DEFENDANTS' EXHIBIT WINDSOR LETTER NO. 12

Poplar Bluff, Mo., 4-17-'05.

Lowell M. Palmer, Esq., 184 Front St., New York City.

DEAR SIR: Your favor of the 13th instant received. I shall do my best to prevent any knowledge of the nature or make of the glue we are using at present, being obtained by any one outside.

Yours respectfully, Nelson Windsor.

C.

DEFENDANTS' EXHIBIT WINDSOR LETTER NO. 13

16 Paid. Poplar Bluff, Mo., 4-19-'05.

Day Rubber Co., St. Louis, Mo.

Express black flexible rubber thumb and finger stalls for three pair hands requiring number eight gloves.

Lowell M. Palmer.

[fol. 858] DEFENDANTS' EXHIBIT WINDSOR LETTER NO. 14

Poplar Bluff, Mo., 4-22-'05.

Lowell M. Palmer, 184 Front St., New York City.

DEAR SIR: Your joint favor of the 19th, instant relative to our making some samples of 20½" x ¾" three ply veneer tight barrel heads, received.

The equipment with which we made the first tests of this new glue was very small and crude, and there have cropped up several slight difficulties, which have delayed us in abandoning entirely the use of the Casein and substituting the new glue. These have been practically all covered now, and we hope to use Mr. Perkins' glue entirely from Monday morning, the 24th, instant on.

The above will explain why I have been unable as yet to report any progress in the matter of a water or oil proof glue.

If, as we hope, we have succeeded in overcoming the little obstacles which usually delay the using of a new article, which from all I can gather in conversation with Mr. Perkins, this stock is, as far as the glueing up of the veneer is concerned, we will commence making some of the samples, as per your request of the 19th, by Wednesday, the 26th instant, and can ship by freight or express, as you request, one week from that date.

Mr. Perkins declares positively that there is no lime whatever used in connection with this glue of his, but there is an alkali of some description used, however, which has taxed our ingenuity to the utmost to prevent the cutting of the glue room men's hands. This alkali is contained in the solvent, which accomplishes the same purpose with his glue as Ammonia does with Casein, and Perkins states

that it is a soda product. If it were not for the fact that this substance is a powerful disinfectant, and the cut places on the men's hands heal quite rapidly, I do not think there is any doubt but what this glue would have had to have been abandoned. We have a very efficient equipment for handling and agitating this glue in the process of mixing, which has enabled Perkins to obtain a perfect solubility, with between 50% and 60% of the solvent that he has been accustomed to using, and this, of course, reduces the percentage of alkali in the entire mixture, and with the use of rubber finger stalls and an oiled canvas glove, which we have [fol. 859] succeeded in purchasing, the men are entirely satisfied to handle the glue of the mixture or nature which Mr. Perkins has succeeded in making it now.

As Mr. Perkins states that to obtain the required water or oil proof results the usual amount, if not a little more, of the solvent must be used, the question is going to come up whether or not the boys will be able to handle it. Perkins is very ingenious and is very anxious to give you a satisfactory result on these tight barrel heads, and I am hopeful that between the two of us that result will be obtained.

I wish, however, to place before you the difficulties which I know will confront us, so that you will understand any temporary setbacks or delays which may result from same.

Very respectfully, Nelson Windsor.

C.

DEFENDANTS' EXHIBIT WINDSOR LETTER NO. 15

Poplar Bluff, Mo., 4-24-'05.

Day Rubber Co., St. Louis, Mo.

DEAR SIRS: We are experiencing considerable trouble in protecting our employes hands who handle a glue containing a small percentage of a very strong alkali. We recently wired you to ship us some finger stalls, and same have been received and put in service. These stalls are O. K. as far as they go, but the mixture containing the alkali slops around so much that it gets inside the finger stalls. Can you furnish us a rubber glove of about the same weight as the darkest and most flexible finger stalls

you shipped us? If you have not a glove quite so heavy, we could use it, provided it was a loose fit on a hand requiring a number 8½ glove. If you have such a glove, please mail us three pair, and if same are satisfactory we will order more as we require them.

An early reply will oblige.

Yours very truly, Lowell M. Palmer, by Nelson Windsor, Asst. Supt.

C.

[fol. 860] DEFENDANTS' EXHIBIT WINDSOR LETTER No. 16

Poplar Bluff, 4-27-'05.

Lowell M. Palmer, Esq., 184 Front St., New York City.

DEAR SIR: I enclose herewith invoice and receipted expense bill for the Perkins glue stock contained in car Mo. P. 22736. The contents of the car checked alright with the invoice.

Yours respectfully, Nelson Windsor.

Encl.

C.

This glue is still being billed or classified as starch.

DEFENDANTS' EXHIBIT WINDSOR LETTER No. 17

Poplar Bluff, Mo., 4-29-'05.

Mr. Whitney, Supt. Singer Mfg. Co., Cairo, Ill.

DEAR SIR: Mr. F. G. Perkins of Lake Mary, Florida, who has been with us for some time, starting us aright in using his glue, informs us that you would like to visit this plant, and see the nature and handling of his glue stock. We will be pleased to show you at any time whatever in this line may be of service to you.

Yours very truly, Lowell M. Palmer, by Nelson Windsor, Asst. Supt.

C.

[fol. 861] DEFENDANTS' EXHIBIT WINDSOR LETTER No. 18

Poplar Bluff, Mo., 4-29-'05.

Lowell M. Palmer, Esq., 184 Front St., New York City.

DEAR SIR: Your joint favor of the 25th. instant to Mr. Perkins and myself and also your favor of the 26th instant, received.

We have been running Perkins glue exclusively now for one week, and I think I am safe in saying we will experience no further serious trouble in handling this glue as mixed for the sugar or slack barrel heads. This having been accomplished, Mr. Perkins will commence this coming week working on the tight head proposition.

As instructed in your favor of the 26th instant, I have written Mr. Whitney as per enclosed copy.

I also enclose herewith a communication received at this office this A. M.

Yours respectfully, Nelson Windsor.

Encl.
C.

DEFENDANTS' EXHIBIT WINDSOR LETTER No. 19

Poplar Bluff, Mo., May 4, 1905.

Lowell M. Palmer, Esq., 184 Front St., New York City.

DEAR SIR: Your several favors of the 2nd. instant received. I shall make shipment at once of all the empty Casein bags we have on hand, shipping and invoicing them as instructed in the letter copy which you enclosed.

The logs coming from the woods at present will admit of about 250 boxes being made daily, and this quantity I can commence making within a week or ten days, without interfering with the output of the plant. Your favor of February 17th. last called for both sides and ends of boxes manufactured in the future to be made ½" when dry, while you mentioned this thickness for ends only in your favor of the 2nd. instant. Shall I use Perkins glue in the manufacture of tops and bottoms? It is giving us a good result in the heading. We have about one half car of Casein on hand.

Yours respectfully, Nelson Windsor.

C.

[fol. 862] DEFENDANTS' EXHIBIT WINDSOR LETTER No. 20

Poplar Bluff, Mo., 5-9-'05.

Lowell M. Palmer, 184 Front St., New York City.

DEAR SIR: We hand you herewith invoice and copy of B. L. 1577 empty Casein bags, which we have shipped to the Casein Mfg. Co., of Bainbridge, N. Y., as per their recent request. You will notice there were, in all 63 bundles of these bags; 61 bundles contain 25 bags each and two bundles contain 26 bags each.

Yours respectfully, Nelson Windsor.

Encl.
C.

DEFENDANTS' EXHIBIT WINDSOR LETTER No. 21

Poplar Bluff, Mo., 5-9-'05.

Casein Mfg. Co., Bainbridge, N. Y.

GENTLEMEN: We hand you herewith original B. L. for 63 bundles of empty Casein bags; there are in all 1,577 bags; 61 bundles contain 25 bags each and two bundles contain 26 bags each. Invoice and copy of B. L. have been forwarded to our New York office.

Yours very truly, Lowell M. Palmer, by Nelson Windsor, Asst. Supt.

Encl.
C.

[fol. 863] DEFENDANTS' EXHIBIT WINDSOR LETTER No. 22

Poplar Bluff, Mo., 5-9-'05.

F. G. Perkins, Esq., c/o Wright Hotel, Poplar Bluff, Mo.

DEAR SIR: We have on hand at present only 2½ barrels of Solvent, or about 7 or 8 days' run. Inasmuch as we do not know the address of the people from whom you order this in St. Louis, we suggest that you get a rush order off tonight, asking them to ship us two barrels per week for one month's time, or possibly just two weeks' time, and before the end of that period we can make permanent ar-

rangements with this company regarding the price of this commodity and the rate of delivery.

Yours very truly, Lowell M. Palmer, by Nelson Windsor, Asst. Supt.

C.

DEFENDANTS' EXHIBIT WINDSOR LETTER NO. 23

Poplar Bluff, Mo., 5-11-'05.

Lowell M. Palmer, Esq., 184 Front St., New York City.

DEAR SIR: The monthly expenses of the veneer side of the plant run unusually high, owing to the work done in the glue room in preparation for the handling of Perkins glue, and also on account of the purchase of a new log haul chain, about which I wrote you some time ago. We have not received all our paid bills, and I cannot therefore make an itemized statement of these unusual expenses. As soon as these are received I will send statement to you.

Yours respectfully, Nelson Windsor.

C.

[fol. 864] DEFENDANTS' EXHIBIT WINDSOR LETTER NO. 24

Poplar Bluff, Mo., 5-12-'05.

Wm. Schield Mfg. Co., St. Louis, Mo.

GENTLEMEN: Mr. Frank G. Perkins of Lake Mary, Fla., who has been with us for some weeks past, starting us in the use of his glue, has handed us your quotation addressed to him of the 9th instant on "76-98 soda" made up in ten ton lots to be taken out in 50 to 10 barrel lots at $2\frac{3}{4}$ c. per pound, F. O. B. St. Louis, same terms as heretofore. As we are to be the users of this commodity, we would be pleased to have you confirm this quotation to us, which is agreeable to Mr. Perkins. We refer you to James Stewart & Co. and the Medart Patent Pulley Co., both of which concerns are in your city, in regard to our standing, and hope you will see your way clear to make the terms 30 days net.

An early reply will oblige.

Yours very truly, Lowell M. Palmer, by Nelson Windsor, Asst. Supt.

C.

DEFENDANTS' EXHIBIT WINDSOR LETTER NO. 25

Poplar Bluff, Mo., 5-11-'05.

Davol Rubber Co., Providence, R. I.

GENTLEMEN: We have received through a St. Louis jobber a leaflet showing cuts of rubber gloves and mittens which you manufacture. We have recently commenced using a glue in our veneer heading process which contains an alkali and cuts some of our employe's hands considerably. We have purchased through several St. Louis concerns, your half long, tan colored cloth or gauze lined rubber gloves, in sizes ranging from 9 to 12. These gloves give us the best service of any gloves we have been able to procure that would protect the men's hands from the cutting action of this glue. There is only one improvement that we can see could be made to this glove, and that is the palm and the fronts of the fingers might be reinforced with about as much again rubber as you place on them [fol. 865] at present, as practically all the wear comes from these portions.

Please let us know as early as possible whether or not you can re-enforce these gloves as suggested, and if so, what price can you quote us on same in 12 dozen lots, sizes running from 11 to 13.

Hoping for an early reply, we are,

Yours very truly, Lowell M. Palmer, by Nelson Windsor, Asst. Supt.

C.

DEFENDANTS' EXHIBIT WINDSOR LETTER NO. 26

Poplar Bluff, Mo., 5-16, 05.

Lowell M. Palmer, Esq., 184 Front St., New York City.

DEAR SIR: I enclose herewith receipted expense bill and invoice for Perkins' glue stock received in Mo. P. car 28207. The contents of this car checked according to the invoice.

I also enclose a statement made by Mr. Perkins for solvent, and also other materials used in tight barrel experimenting. The two largest items in the charges for tight barrel heading are for glue, of which he used but a small amount. The ten barrels of #3 glue (6176 lbs.) was intended in the first place for the ordinary sugar barrel heading, but he found that the could work to better economy with the glue for these slack barrel heads, without using the #3 glue, this he intends using on the tight barrel work, therefore, the charge against same. This statement of materials received here is correct.

Mr. Perkins made up some tight barrel heads, but the joint, although it may prove oil or water proof, still it was not strong enough, as far as the adhesive was concerned, to warrant placing the heads under a severe test. When we examined these heads, I advised him to not send same, but to make up some more. I am having the veneer made at present for another trial at these heads, and when Mr. Perkins returns here, which he expects to do at an early date, he will make up another quantity of these tight barrel heads.

Yours respectfully, Nelson Windsor.

Encl.
C.

[fol. 866] DEFENDANTS' EXHIBIT WINDSOR LETTER No. 27

Poplar Bluff, Mo., 5-17-'05.

F. G. Perkins, Esq., 210 8th St., Lincoln, Ill.

DEAR SIR: Your telegram of this date requesting me to ship to the Singer Mfg. Co., Cairo, Ill., 20 bags of glue, lot 68, classifying same as "glue stock," received. I will comply with your request by making shipment of this tomorrow, it being too late now to engage a drayman today.

Referring to the matter of my Father's taking an agency from you to sell your glue, about which we have had several conversations, I believe all the doubtful points once in my mind as to the quality and economy and practicability in the handling of your glue have been overcome, and I think if

my Father is going to take up this work he ought to do so in the near future.

With your glue being handled successfully at this plant and also in all probability capturing the contract or contracts with the Singer people, there could not be a much better time selected for introducing same in the north. About how large a territory, say in states, would you wish him to handle the selling of your glue in? Regarding the commission or salary, will say I think it would be more satisfactory to him for you to state your terms in both ways, that is, if straight salary, with no expense allowed, what amount; if salary and expenses allowed, what amount; if commission with no expenses allowed, what per cent; if commission and expenses allowed, what per cent, and if part salary and part commission, with or without expenses, what amount and per cent?

I have not up to this time, for personal reasons, broached the subject to my Father, but will do so on the receipt of your answer to this letter. He is in a position to take up this agency within one week after its acceptance.

I wish to congratulate you on your success as spoken of by you in conversation over the telephone this afternoon, and I sincerely hope you will have no trouble in overcoming any little obstacles which may turn up in the usage of this glue by the Singer people.

I have about completed a plan whereby we can at this plant remove at least 75% of the waste caused by the [fol. 867] glue slopping on the sheets while passing through the rolls. As you stated in conversation over the telephone, that you would not likely be here again for three weeks, I hope to have this plan worked out on part of the presses at least before you return.

With kindest regards from Mrs. Windsor and myself to you all, and wishing you continued success with your glue, I am,

Yours sincerely, Nelson Windsor.

C.

DEFENDANTS' EXHIBIT WINDSOR LETTER No. 28

Poplar Bluff, Mo., 5-17-'05.

Lowell M. Palmer, Esq., 184 Front St., New York City.

DEAR SIR: I enclose herewith copy of a letter I wrote Wm. Schield Mfg. Co., of St. Louis, for quotation on the solvent used with the Perkins glue, and also their reply to same.

We have, since using Perkins glue, been buying this solvent at 3¾c per pound from this company, as we have no contract for same, and Mr. Perkins states that 2¾ cents per pound is a very close price. We use, approximately 200 pounds of this solvent per day, so the saving made by purchasing it in carload lots would hardly warrant the risk of keeping so much on hand. Mr. Perkins stated to me that he was not positive that this solvent would hold its strength an unlimited time and it is much safer to handle it in quantities not exceeding ten barrels. A contract for ten tons would last us, at our present consumption of glue, about three months. Do you wish me to place this contract from this office, and also future ones, as our needs require? We can at any time determine the quality of this commodity we are receiving by having it chemically analyzed, so that any one furnishing us this solvent will in all probability, as this concern says, give us material of uniform quality. Mr. Perkins recommends the Wm. Schield Co. as a strong, reliable concern, from whom we will most likely get the best service.

Yours respectfully, Nelson Windsor.

Encl.
C.

[fol. 868] DEFENDANTS' EXHIBIT WINDSOR LETTER No. 29

25 paid. Poplar Bluff, Mo., 5-19-'05.

Wm. Schield Mfg. Co., St. Louis, Mo.

Did F. G. Perkins order five barrels "76-98 soda" on ninth and has same been shipped. If so trace, if not when?

Lowell M. Palmer.

DEFENDANTS' EXHIBIT WINDSOR LETTER No. 30

9 paid. Poplar Bluff, Mo., 5-19-'05.

Wm. Schield Mfg. Co., St. Louis, Mo.

Ship five barrels at once and bill to me.

Lowell M. Palmer.

DEFENDANTS' EXHIBIT WINDSOR LETTER No. 31

Poplar Bluff, Mo., 5-19-'05.

Singer Mfg. Co., Cairo, Ill.

GENTLEMEN: We shipped to you yesterday according to a telegraphic request made by Mr. F. G. Perkins, 20 bags of glue stock, containing 5,600 pounds, for which we enclose herewith original B. L.

If not asking too much of you, we would like to know what success you have had in trying this glue.

Yours very truly, Lowell M. Palmer, by Nelson Windsor, Asst. Supt.

Encl.

C.

[fol. 869] DEFENDANTS' EXHIBIT WINDSOR LETTER No. 32

Poplar Bluff, Mo., 5-22-'05.

Lowell M. Palmer, Esq., 184 Front St., New York City.

DEAR SIR: Your favor of the 19th instant relative to the purchase of solvent for the Perkins glue, received. I will, as you request, order this material in five barrel lots.

Yours respectfully, Nelson Windsor.

C.

DEFENDANTS' EXHIBIT WINDSOR LETTER No. 33

Poplar Bluff, Mo., 5-22-'05.

Wm. Schields Mfg. Co., St. Louis, Mo.

GENTLEMEN: We enclose herewith our check covering your statement of the 19th instant for five barrels (2,980 lbs. net) "87-98 Soda" at $2.75 per cwt.

You may enter our order for another five barrels to be shipped within two weeks' time.

Yours very truly, Lowell M. Palmer, by Nelson Windsor, Asst. Supt.

Encl.

C.

DEFENDANTS' EXHIBIT WINDSOR LETTER No. 33

Poplar Bluff, Mo., 5-25-'05.

Wm. Schield Mfg. Co., St. Louis, Mo.

GENTLEMEN: Your favor of the 23rd instant enclosing receipted bill for the five barrels of solvent, and stating that you had received a remittance from Mr. F. G. Perkins for the same amount, received. You may hold this check as payment for the additional five barrels ordered from you on the 22nd instant.

Yours very truly, Lowell M. Palmer, by Nelson Windsor, Asst. Supt.

C.

[fol. 870] DEFENDANTS' EXHIBIT WINDSOR LETTER No. 35

Poplar Bluff, Mo., 6-1-'05.

Day Rubber Co., St. Louis, Mo.

GENTLEMEN: We are not in a position to decide just what we need in the shape of gloves for our work yet, but will be writing you further in the course of a week.

Yours very truly, Lowell M. Palmer, by Nelson Windsor, Asst. Supt.

C.

DEFENDANTS' EXHIBIT WINDSOR LETTER No. 36

9 paid. Poplar Bluff, Mo., 6-5,'05.

Wm. Schield Mfg. Co., St. Louis, Mo.

Has soda ordered May twenty-second been shipped? Rush.

Lowell M. Palmer.

DEFENDANTS' EXHIBIT WINDSOR LETTER No. 37

Poplar Bluff, Mo., 6-12-'05.

Meyer Bros. Drug Co., St. Louis, Mo.

GENTLEMEN: We have succeeded in purchasing from a St. Louis rubber house the brown colored cloth insertion regular Durol gloves, 6 pair #12 and 6 pair #13. When we have used this 12 pair we will know positively whether or not we will need any more of this style glove, and will then be in position to pass on your recent proposition, giving us prices on these gloves in 12 dozen lots, in the meantime, we are,

Yours very truly, Lowell M. Palmer, by Nelson Windsor, Asst. Supt.

C.

[fol. 871] DEFENDANTS' EXHIBIT WINDSOR LETTER No. 38

Poplar Bluff, Mo., 6-12-'05.

Lowell M. Palmer, Esq., 184 Front St., New York City.

DEAR SIR: I enclose herewith receipted expense bill for the two cars containing Perkins' glue called for in the enclosed invoice. These two cars contained the 300 bags called for in the invoice and I have signed same.

Yours respectfully, Nelson Windsor.

Encl.
C.

DEFENDANTS' EXHIBIT WINDSOR LETTER No. 39

Poplar Bluff, Mo., 6-6-'05.

Meyer Bros. Drug Co., St. Louis, Mo.

GENTLEMEN: We have found in our tests so far that it is necessary to use a canvas glove over any rubber gloves we have been able to secure yet, and therefore we do not obtain a sufficiently better result from the re-enforced rubber glove over and above the unre-enforced to warrant our paying the difference in price.

Please let us know if you can express us at once, 12 pair of half long brown colored cloth insertion regular Duvol gloves, six pair to be #12 and six pair #13.

Yours very truly, Lowell M. Palmer, by Nelson Windsor, Asst. Supt.

C.

[fol. 872] DEFENDANTS' EXHIBIT WINDSOR LETTER No. 40

Poplar Bluff, Mo., 6-6-'05.

Day Rubber Co., St. Louis,. Mo.

GENTLEMEN: We have found in our tests so far that it is necessary to use a canvas glove over any rubber glove we have been able to secure yet, and therefore we do not obtain a sufficiently better result from the re-enforced rubber gloves over and above the unreinforced to warrant our paying the difference in price.

Please let us know if you can express us at once, 12 pairs of brown colored cloth insertion regular Duvol gloves, six pairs to be #12 and six pair #13.

Yours very truly, Lowell M. Palmer, by Nelson Windsor, Asst. Supt.

DEFENDANTS' EXHIBIT WINDSOR LETTER No. 41

Poplar Bluff, Mo., 6-12-'05.

Day Rubber Co., St. Louis, Mo.

GENTLEMEN: Please enter our order for 12 pairs of men's tan rubber gloves, 6 pair to be #12 and 6 pair to be #13, these gloves to be of the regular Duvol brown colored cloth insertion.

Replying to your favor of the 7th instant will say that the men who wear these gloves handle rough edge veneer sheets, both with and without glue on them, and we have found it necessary to wear a canvas glove over the rubber glove. These canvas gloves we purchase from different sources, and they only answer as a protection to the water or liquid proof rubber glove. These canvas gloves cost

from 7 to 8c per pair and by using them when a pair becomes worn on the fingers, they are thrown away with very little loss, whereas if we attempted to use a rubber glove, if you could cover same with some kind of canvas, when this canvas was worn through there would be nothing to protect the rubber and it would be only a short time until the entire glove would have to be thrown away.

Yours very truly, Lowell M. Palmer, by Nelson Windsor, Asst. Supt.

C.

[fol. 873] DEFENDANTS' EXHIBIT WINDSOR LETTER No. 43

Poplar Bluff, Mo., 6-19-'05.

Wilts Veneering Co., Plymouth, N. C.

Attention Mr. Conway Newman

GENTLEMEN: Your favor of the 16th instant by Mr. Conway Newman, your superintendent, with letter from Mr. Lowell M. Palmer enclosed, received. I have just wired you as per enclosed copy.

Mr. Palmer has quite a veneer plant at this point and there is no doubt that you will, as he states, be well repaid for your visit.

I return herewith Mr. Palmer's letter to you.

Yours very truly, Lowell M. Palmer, by Nelson Windsor, Asst. Supt.

Enc.

C.

DEFENDANTS' EXHIBIT WINDSOR LETTER No. 42

Poplar Bluff, Mo., 6-19-'05.

Lowell M. Palmer, Esq., 184 Front St., New York City.

DEAR SIR: In checking the last invoice for Perkins glue rec'd at this plant, I made in order to get the expense bill from the R. R. Co. as quickly as possible check according to the amount which they 'phoned us and the expense bills were gotten from the agent in town and enclosed in the

letter, without my seeing same. We have just received copies of these expense bills and I find that there are two errors, one in the weight and the other in the extension. The Perkins invoice on this shipment of glue called for 60,000 pounds and the R. R. Co's expense bills call for 66,000 pounds. This shipment of glue contained 300—200# bags, and we have up to the present time found Perkins' weight correct. This last shipment of glue reached us in two cars and we got two expense bills from the R. R. Co. These expense bills are similar as to weight and rating, but on one they make a charge of $59.40 and the other $54.00. I suppose you have noticed that they are billing this glue stock [fol. 874] to us as "Cassava Starch" and rating it accordingly.

Yours respectfully, Nelson Windsor.

DEFENDANTS' EXHIBIT WINDSOR LETTER NO. 44

Poplar Bluff, Mo., 6-19-'05.

F. G. Perkins, Esq., c/o Halliday House, Cairo, Ill.

DEAR PERKINS: Your favor of the 13th instant received, and I am sorry that this answer has not been sent sooner, but the delay was unavoidable.

Regarding the lessening of the pressure of our accumulator, will say that we found that with any less pressure than we are using we could not bolt the heading in the retainers. We are getting a much better result from this glue now than when you were here last, owing to the fact that we have been able to get a better action from the solvent by the method of which I spoke to you, namely, using some 10 to 25% of the necessary water in mixing just at the time we introduce the solvent.

There is no suggestion that I could make regarding the conditions at Cairo with the 15⅜" diameter by 18" in length rolls, other than that you mix the glue as regards proportions between glue and water, very heavy, but at the same time with the quality or kind of your glue that will make it as fluent as possible; then by good stout springs above the upper rolls, force the rolls to feed the stock through prop-

erly, at the same time getting on approximately the same amount of mixture as you would if the proportion were made with more water and less glue, thereby adding considerably to the sheet the amount of adhesive qualities.

I have a little more interesting news for you on your return to the Bluff.

Yours sincerely, Nelson Windsor.

[fol. 875] DEFENDANTS' EXHIBIT WINDSOR LETTER NO. 45

Poplar Bluff, Mo., 6-19-'05.

Wilts Veneering Co., Plymouth, N. C.

Attention Mr. Conway Newman

GENTLEMEN: Your favor of the 16th instant by Mr. Conway Newman, your Superintendent, with letter from Mr. Lowell M. Palmer enclosed, received. I have just wired you as per enclosed copy.

Mr. Palmer has quite a veneer plant at this point, and there is no doubt that you will, as he states, be well repaid for your visit.

I return herewith Mr. Palmer's letter to you.

Yours very truly, Lowell M. Palmer, by Nelson Windsor, Asst. Supt.

Encl.

C.

DEFENDANTS' EXHIBIT WINDSOR LETTER NO. 46

Poplar Bluff, Mo., 6-19-'05.

Lowell M. Palmer, Esq., 184 Front St., New York City.

DEAR SIR: Replying to your favor of the 15th instant regarding the unusual warp in the thick veneer for the box sides and ends received by you recently, will say that I think the sides and ends that are troubling you are those that have been stored at the plant, some in the storage shed trimmed and baled and others wedged under our stacking frames untrimmed. I may be mistaken in this con-

clusion, however, and will steam the blocks from which I cut the sides and ends more in the future than I have in the past, although we are about at a limit along this line, as the blocks with too much heat are so soft in the center that the wood will not stand the strain of the chuch in cutting this heavy veneer. I will go just as far along this line as I possibly can.

Yours respectfully, Nelson Windsor.

C.

[fol. 876] DEFENDANTS' EXHIBIT WINDSOR LETTER No. 47

Poplar Bluff, Mo., 6-22-'05.

Wm. Schield Mfg. Co., St. Louis, Mo.

GENTLEMEN: We are enclosing a check covering your invoice of the 14th. instant for five barrels of "76-98 soda." You may enter our order for 5 barrels more of this material to be shipped in about two weeks. Please attach original B. L. to your invoice so we can, as you call for in your invoice, mail you a check on receipt of same.

Yours very truly, Lowell M. Palmer, by Nelson Windsor, Asst. Supt.

Encl.
C.

DEFENDANTS' EXHIBIT WINDSOR LETTER No. 48

Poplar Bluff, Mo., 7-8-'05.

Wm. Schield Mfg. Co., St. Louis, Mo.

GENTLEMEN: We have your statement of the 7th instant and enclose herewith our check to cover same. We would have paid this sooner but have never received an invoice from you. Please make duplicate invoice and attach to enclosed receipt and return to us.

Yours very truly, Lowell M. Palmer, by Nelson Windsor, Asst. Supt.

Enc.
C.

DEFENDANTS' EXHIBIT WINDSOR LETTER NO. 49

Poplar Bluff, Mo., 7-11-'05.

Day Rubber Co., St. Louis, Mo.

GENTLEMEN: We would be pleased to have you express us 12 pairs of the Duvol Rubber Gloves same as we purchased from you recently, 9 pair number 12 and 3 pair number 13.

An early shipment will oblige.

Yours very truly, Lowell M. Palmer, by Nelson Windsor, Asst. Supt.

C.

[fol. 877] DEFENDANTS' EXHIBIT WINDSOR LETTER NO. 50

Poplar Bluff, Mo., 7-22-'05.

Lowell M. Palmer, Esq., 184 Front St., New York City.

DEAR SIR: Enclosed please find O. Kd. invoice and receipted expense bill for Perkins' glue received in car S. P. 83689.

Yours respectfully, Nelson Windsor.

Encl.

C.

DEFENDANTS' EXHIBIT WINDSOR LETTER NO. 51

Poplar Bluff, Mo., 7-31-'05.

Wm. Schield Mfg. Co., St. Louis, Mo.

GENTLEMEN: We wish to thank you for your favor of the 26th instant. Inasmuch as we intend closing down ourselves in a few days for some time, we are not in need of any soda at present. We will advise you of our requirements well in advance of same, when we again start up.

Yours very truly, Lowell M. Palmer, by Nelson Windsor, Asst. Supt.

C.

DEFENDANTS' EXHIBIT WINDSOR LETTER No. 52

Poplar Bluff, Mo., 8-3-'05.

Lowell M. Palmer, Esq., 184 Front St., New York City.

DEAR SIR: I have just wired you night rate as per enclosed copy. We received the first car referred to about three days ago, and thinking that no doubt an invoice from your New York office would reach here shortly to be checked according to the contents of the car, I unloaded it. Today, however, we find a still large car of this glue in our yard, [fol. 878] and as we already have a large quantity of this glue on hand, I thought it best to wire you for instructions.

Yours respectfully, Nelson Windsor.

Encl.
C.

DEFENDANTS' EXHIBIT WINDSOR LETTER No. 53

Poplar Bluff, Mo., 7-31-'05.

F. G. Perkins, Esq., 121 51st St., Cor. Monroe Ave., Hyde Park, Chicago, Ill.

MY DEAR PERKINS: Your favor of the 14th, 22nd and 26th received.

Very sorry to learn that Mr. Palmer is not well, but glad to know that you obtained an interview.

I thank you for your kindly suggestions asd expressions in your favor from Norfolk, Va.

Hope you have had success with the Wilts veneer people in your interview with their manager at Richmond.

I have not overlooked the turning of the tight barrel heading spoken of in your favor of the 26th. instant from Louisville. The department from which these heads are turned will be in operation for several months yet, but I will have the heads turned this coming week, so that if you request any of them sent to you as per conversation before you left, I can do so. You remember I promised to send you some samples for a grand stand play to the trade that would pull the fiber in good style. I am mailing you some under separate cover, which were covered at the rate of about

55 to 60 square feet. These were glued up from a batch made from experimental mixture on the third flat, consisting of 25# heavy body, 2½# solvent and 100# water, and used on these samples immediately after it was finished. With Baker's help I have inaugurated a system of testing our stock regarding, first, the batch from which it is glued up; second, the spreader the glue is put on by; third, the number of hours in the retainers, and last, but not least, the time that the glue has stood after being finished, before it has been applied to the stock. This testing has convinced me that the sooner after being finished the glue is used, the beter adhesion is obtained. This statement is based on the fact obtained from testing these heads, and there is no doubt in my mind at all that it is absolutely correct. As the reason for this fact I find by examining the stock carefully, that the glue used shortly after being finished does not pene-[fol. 879] trate the veneer half as much as that which has stood from 24 to 36 hours. My attention was called to this peculiarity in the glue, or action of the solvent, by having to stand a partial batch of this glue over 72 hours. The heads made from this glue after standing that length of time, were about the worst we have glued up since we commenced using your glue. I am arranging now to mix a large batch of this glue and finishing same in the morning by getting a real early start and running a part of same in the afternoon of the same day; then I will let this glue stand in the tank for two days, and run some more stock from it. I will then saw up some of the heads and send you samples, and I think if you make a close inspection of them you will readily agree with the above. The above finding, however, only confirms the point we have always been raising, namely, that if your glue can be kept in the joint, and not sent half way through the veneer, we will get an A. 1 result with a large covering surface.

Hoping you have enjoyed your trip and that this finds both Mrs. Perkins and yourself enjoying splendid health, I am with kindest regards from both Mrs. Windsor and myself,

Yours sincerely, Nelson Windsor.

DEFENDANTS' EXHIBIT WINDSOR LETTER No. 54

Poplar Bluff, Mo., 8-3-'05.

35 Red Paid.

Lowell M. Palmer, 184 Front St., New York City:

Two cars glue loaded partially in barrels and partially in sacks received in our yards and I have no instructions, invoice or bill of lading for same. Please advise what disposition you wish made of same.

Nelson Windsor.

[fol. 880] DEFENDANTS' EXHIBIT WINDSOR LETTER No. 55

Poplar Bluff, Mo., 8-4-'05.

31 Paid.

F. G. Perkins, 121 E. 51st St., Chicago, Ill.

Have received two carloads glue without invoice, bill of lading or written instructions. Wired New York as to disposition and received reply to unload two cars. Are you going to ship any more?

Nelson Windsor.

DEFENDANTS' EXHIBIT WINDSOR LETTER No. 56

Poplar Bluff, Mo., 8-9-'05.

Lowell M. Palmer, Esq., 184 Front St., New York City.

DEAR SIR: I received this A. M. your favor of the 7th inst. enclosing invoice and B. L. covering the Perkins glue contained in cars L. S. & M. S. 42690. For some reason this glue was transferred enroute and arrived here in two cars. Although these two cars contained the requisite number of barrels and bags called for by the invoice and B. L. yet I can only report 67,428 pounds as against 69,539 pounds called for in the invoice.

In checking this glue as it arrived I accepted all the weights as they were marked on both the bags and the barrels, all of them being marked with the exception of 77 bags.

These 77 bags I weighed carefully and gave Perkins credit for the actual weight.

Enclosed please find expense bill for L. S. & M. S. car 42690, freight $238.14 and L. S. & M. S. car 24344, freight $169.83.

Yours respectfully, Nelson Windsor.

Encl.
C.

[fol. 881] DEFENDANTS' EXHIBIT WINDSOR LETTER NO. 57

Poplar Bluff, Mo., 8-10-'05.

F. G. Perkins, Esq., 121 E. 51st St., Chicago, Ill.

DEAR PERKINS: Referring to your favor of the 6th instant on the subject of the cars of glue received here recently, and about which I wired you, first, the car shipped from Lake Mary on July 6th was received on about July 20th and mailed to the New York office the O. K.d invoice and receipted expense bill for same. I am surprised you have not heard from there regarding same before this date, but think the delay has been caused by the absence from the office of the auditor, G. Fred Royce.

Second, the L. S. & M. S. car 42690 for some reason or other was lightened before it arrived here. This car came into our yards but contained only a portion of the glue originally placed in it. We have since that time, however, received the remainder in another car. There was a slip somewhere along the line and I did not receive the invoice or original B. L. for this material until yesterday, but immediately upon its receipt, I checked the invoice and forwarded same with the receipted expense bill to the New York office. I could not make the contents of these two cars check according to your invoice, although the requisite number of sacks and barrels called for in the B. L. came in the two cars, and in checking them I credited you with the weights as marked on these bags and bbls. I found 77 sacks in all which had no marks on them, 19 of these weighed in the neighborhood of from 95 to 100 pounds—one weighed 200 pounds, and the remaining 57 weighed between 240 and 250 pounds. My checking showed 2,111 pounds

short. I have kept all these pkgs. intact and am not using same, and if I have been mistaken in tallying, the goods are here for re-checking.

I have since wiring you about this glue received word from Mr. Palmer to check and unload two, or possibly three cars of your glue—L. S. & M. S. 42690 being one of them. If you will advise me when the shipment of the next and last car is to be made, it will enable me to get a report on same to the New York office much quicker than I was able to do on this last car.

We are running on logs and poles taken from the bottom of the slough, which is at best very slow work, and [fol. 882] it will be a matter of from three to six weeks before all this timber is entirely used.

Yours sincerely, Nelson Windsor.

C.

Kindest regards to Mrs. Perkins and yourself.

DEFENDANTS' EXHIBIT WINDSOR LETTER No. 58

Poplar Bluff, Mo., 8-14-'05.

F. G. Perkins, Esq., 212 E. 51st St., Chicago, Ill.

DEAR SIR: Your two favors of the 11th and 12th instant relative to glue contained in L. S. & M. S. car 42690 received. I regret very much that you did not furnish me with the information contained in these two letters, before this car was received, as it would have prevented the extra correspondence and contradictions of the first checkings, which is now necessary to the New York office from this office. Lacking the information contained in these letters, we tallied the cars as follows: in car L. S. & M. S. 42690 there were 74 barrels, which netted 22,022#; 76 bags, 57 of which weighed from 233 to 248#, and 19 of which weighed from 87 to 102#, the total bags netting 15,347#.

The second car, L. S & M. S. 24344 contained 145 bags, which we accounted at 200# each, totaling 29,000#; three barrels weighed 746#, and one bag weighed 113#. The two cars totaled according to the above, 67,428#.

Since receiving your letters I weighed a number of the 145 bags which we allowed 200# for, and found them to average 213# net. This makes 1,885# glue to your credit. As our tally was 2,111 short of yours, this still leaves 226# to be accounted for. We only found 19 of the 20 bags which you sent at 100# net, and by checking over our weights on the barrels, our figures show 16# shortage; then the one bag which you have marked 190# we found to weigh only 113#. This still leaves 33# which I cannot account for, except that there must have been a difference in our weights as to the 19 bags, which you state average 100# each.

I have checked the contents of these two cars myself, and outside of the 13# per bag of the 145 bags, I cannot find anything wrong with the count of my unloader.

[fol. 883] Before reporting again to the New York office on these cars, I would like to know if the count as laid out in this letter will stand.

Yours truly, Nelson Windsor.

C.

Mrs. Windsor joins me in sending kindest regards to Mrs. Perkins and yourself.

DEFENDANTS' EXHIBIT WINDSOR LETTER No. 59

Poplar Bluff, Mo., 8-19-'05.

F. G. Perkins, Esq., 121 E. 51st St., Chicago, Ill.

DEAR SIR: Enclosed please find check covering the invoices received from you on several different dates for solvent, gloves, glue, etc.

Yours very truly, Lowell M. Palmer, by Nelson Windsor, Asst. Supt.

Encl.

C.

DEFENDANTS' EXHIBIT WINDSOR LETTER No. 60

Poplar Bluff, Mo., 9-22-'05.

F. G. Perkins, Esq., Lake Mary, Fla.

DEAR SIR: As requested in your favor of the 9th inst. we enclose herewith B/L for N. Y. Co. car 91591.

Please excuse the delay as the person who had charge of these B/L has been away on his holidays, and had all these papers locked up in his desk.

Yours truly, Lowell M. Palmer, by Nelson Windsor.

Encl.

G.

[fol. 884] DEFENDANTS' EXHIBIT WINDSOR LETTER No. 61

Poplar Bluff, Mo., 9-27-'05.

Wm. Schield Mfg. Co., St. Louis, Mo.

GENTLEMEN: Replying to your inquiry of the 26th instant will say that we will not be in the market for any soda for about one month, and on commencing operations we will not be, for some time, using more than 50% of what we did previously.

Yours very truly, Lowell M. Palmer, by Nelson Windsor, Asst. Supt.

C.

DEFENDANTS' EXHIBIT WINDSOR LETTER No. 62

Poplar Bluff, Mo., 9-23-'05.

Lowell M. Palmer, Esq., 184 Front Street, New York, N. Y.

DEAR SIR: Your favor of the 19th inst., by Mr. Royce regarding the amount of glue reported to have been put in tops and bottoms, has been forwarded to me at Ironton.

I have looked the matter up and find that the foreman in charge of the glue room turned in the wrong account of glue as to what went into boxes and what went into heading. Taking into account the number of square feet covered by a pound of glue in making tops and bottoms I find that

we used about 2,650 lbs. to make up the 1,820 pairs of finished stock and the 5,000 pairs of stock in the retainers.

It is impossible to get accurately the number of pounds that are used in boxes and heading separately as glue out of the same tank is used for both and the foreman in turning in his report made a mistake somehow, but as he is away I don't see how he came to do it.

I enclose corrected statement of glue used.

Yours respectfully, Nelson Windsor. G.

G.

[fol. 885] DEFENDANTS' EXHIBIT WINDSOR LETTER No. 63

Poplar Bluff, Mo., 10-28-'05.

Lowell M. Palmer, Esq., 184 Front St., New York City.

DEAR SIR: I have a request from the local agent of the Iron Mountain R. R. Co. to furnish him with a copy of the weights, as settled for with the shipper of L. S. & M. S. car 42690, which was shipped from New York containing Cassava Starch. I wrote you regarding weights of this car on August 19th, 1905. They ask for this information in settlement of a claim.

Yours respectfully, Nelson Windsor.

DEFENDANTS' EXHIBIT WINDSOR LETTER No. 64

Poplar Bluff, Mo., 11-1, '05.

J. S. Green, Agt. I. M., Poplar Bluff, Mo.

DEAR SIR: Replying to your favor of October 25th, will say that we made settlement with the shipper for the Cassava Starch contained in L. S. & M. S. car 42690 for 69539 pounds.

Yours very truly, Lowell M. Palmer, by Nelson Windsor, Asst. Supt.

DEFENDANTS' EXHIBIT WINDSOR LETTER NO. 65

Poplar Bluff, Mo., 11-8-'05.

F. G. Perkins, Esq., Care Roanoke Hotel, Plymouth, N. C.

DEAR MR. PERKINS: Your favor of October 29th was received in due time, and should have answered it sooner but being very busy and having had a general Malarial "shake-up" has caused the delay.

[fol. 886] I have noted carefully all you say about the proportions you have tried there in mixing and the results you have obtained from same. A little later on I am going to re-arrange the mixers in our tanks, so that we can pull a mixture similar to what you are trying at Plymouth, and also fix our pipes so that they will take the glue to the machines. This, however, I will not do until I have demonstrated to my own satisfaction that our present spreaders will spread as heavy a glue as the proportion you mention is bound to make. If they will not, then I will take the matter up with headquarters of getting suitable spreaders to stretch this heavy mixture over the sheets, thereby obtaining a good adhesive result, and cutting down considerably the cost of our glue.

We started the mill again last Monday, and in ten days or two weeks will be going at a pretty good swing again.

I will enjoy very much hearing from you whenever you have spare time to write, and also value the suggestions and information which you pass along from your trials and tests.

Mrs. Windsor joins me in sending regards to both yourself and Mrs. Perkins.

Yours sincerely, Nelson Windsor.

DEFENDANTS' EXHIBIT WINDSOR LETTER NO. 66

Poplar Bluff, Mo., 2-22-'06.

Wm. Schield Mfg. Co., St. Louis, Mo.

GENTLEMEN: We would be pleased to have you ship us by freight as soon as possible five barrels of your "76-98 Soda."

We wish to ask that in putting up this soda for us that you leave out the paper lining, as it is a great hindrance to us in using this commodity.

Yours very truly, Lowell M. Palmer, by Nelson Windsor, Asst. Supt.

[fol. 887] DEFENDANTS' EXHIBIT WINDSOR LETTER No. 67

Poplar Bluff, Mo., 3-6-'06.

William Schield Mfg. Co., St. Louis, Mo.

GENTLEMEN: We have just wired you as per the enclosed copy. Our stock of this soda had run lower than usual before we gave you this order, on account of negligence of one of our employes. If the entire shipment of this soda has not already been made, or will not go out tomorrow, we wish that you would forward one barrel of this order by Pacific Express as soon as possible.

Yours very truly, Lowell M. Palmer, by Nelson Windsor, Asst. Supt.

Encl.

Have frt. shipment if made tomorrow traced.

---

10 paid. Poplar Bluff, Mo., 3-6-'06.

Wm. Schield Mfg. Co., St. Louis, Mo.

When will order February twenty-second be shipped? Wire reply.

Lowell M. Palmer.

DEFENDANTS' EXHIBIT WINDSOR LETTER No 69

Poplar Bluff, Mo., 3-6-'06.

F. G. Perkins, Esq., West Newton, Mass.

DEAR PERKINS: Your interesting letter of the 28th ultimo receive. We are very glad to learn that Mrs. Perkins is improving, and sincerely hope that she is much better at the present time.

I am sorry that you had such a time of it at Plymouth, but from what Baker told me of the methods of business, I am rather surprised that you have been able to do anything at all at that point. I wish you every success in your effort to have your glue used among the thin veneer or [fol. 888] cabinet workers, but from what I note here of the solvent penetrating, I believe you will have a little trouble in preventing this solvent from staining the veneers.

We have not been able to cover quite as much surface with the same adhesion during the winter months that we did last summer, and now that the weather is warming again, the covering surface begins to increase with no apparent deterioration in the holding of the glue. There is a small amount of glue in sacks which you sent to us about your last shipment, the addition of about 10% of which to the glue we were making up in each batch, gives us a much better result than we have ever been able to obtain, and I think when the weather moderates sufficiently we will be able to cover much more surface with a sufficient adhesion, than we have been able to accomplish yet. This glue in bags spoken of above seems to give the batch a shortness and thus prevents penetration, which we have not been able to obtain in any other way.

I expect within one month to re-arrange our mixing tanks, according to what our experience since their first installation has shown us to be a better plan. We will raise these tanks about two feet above the floor they are resting on at present, will make them shallower by taking about one foot off the top, will put in a much more powerful and effective mixing device, and will use a 6″ main and 4″ feeds to the presses. The main will be located between the bottom of the tank and the upper floor, and the leads to the presses will run direct from the Ts in this main in a straight line at an angle of about 45 degrees, to the spreaders. I will put a valve in the bottom of the tanks of our own design, which will be made in this city, so that the glue will not have to dodge around any corners whatever between the tank and the spreaders. At the spreaders I will use what is termed a "quick opening gate valve" of very light design, which, when opened, will give a straight outlet to the full capacity of the 4″ pipe. I believe then that we can pass almost any old thing from the tanks to the spreaders,

so that we may experiment to our heart's content on a very heavy mixture. This will enable us to cut out a large amount of the water we are using at present, and by doing this will be able to prevent a great deal of the present penetration.

As we have been using only one spreader in the gluing of the small amount of heading and box tops and bottoms we are manufacturing at present, we have had no serious trouble in getting through the pipes to this one press, a much heavier mixture than we ever used while you were [fol. 889] here, and we have not as yet experienced any trouble in getting our spreader to take the sheets through with a stiffer glue.

I conveyed your message to Mrs. Windsor, and she wishes me to thank you and Mrs. Perkins for your kind expressions, and asks me to convey to you both her best wishes, and hopes that Mrs. Perkins will soon be herself again.

Hoping to hear from you at an early date, I am,

Yours sincerely, Nelson Windsor.

DEFENDANTS' EXHIBIT WINDSOR LETTER NO. 70

Poplar Bluff, Mo., 3-8-'06.

Wm. Schield Mfg. Co., St. Louis, Mo.

GENTLEMEN: We have your invoice for five barrels of "76-98 Soda" which you shipped yesterday. We note that you have increased the price of this soda from $2.75 to $2.85 per hundred. Although no signed contract was entered into with you for this commodity, yet you stated when we first commenced purchasing same from you that you could furnish it at $2.75 per hundred, and we thought possibly the increased charge on this invoice was an oversight.

Please let us hear from you in regard to the above and oblige,

Yours very truly, Lowell M. Palmer, by Nelson Windsor, Asst. Supt.

DEFENDANTS' EXHIBIT WINDSOR LETTER NO. 71

Poplar Bluff, Mo., 3-12-'06.

Lowell M. Palmer, Esq., 184 Front St., New York City.

DEAR SIR: I enclose herewith a communication received this morning relative to the Perkins glue. I am forwarding same to you as I was not sure what information you would authorize me to give this man.

Yours respectfully, Nelson Windsor.

Encl.
C.

[fol. 890] DEFENDANTS' EXHIBIT WINDSOR LETTER NO. 72

Poplar Bluff, Mo., 3-14-'06.

Wm. Schield Mfg. Co., St. Louis, Mo.

GENTLEMEN: We have your favor of the 9th instant relative to the increased charge on the "76-98 Soda," and note what you say regarding same. We are enclosing herewith check to cover the amount of your invoice.

Yours very truly, Lowell M. Palmer, by Nelson Windsor, Asst. Supt.

Enc.
C.

DEFENDANTS' EXHIBIT WINDSOR LETTER NO. 73

Poplar Bluff, Mo., 5-7-'06.

Waynesville Wood Mfg. Co., Waynesville, N. C.

GENTLEMEN: Your favor of the 3rd instant enquiring about the cold glue manufactured by Mr. Frank G. Perkins, received.

I have been using Mr. Perkins' cold glue at this plant for one year, gluing up three ply veneer for barrel heads and box shooks. For the class of work we are doing, I obtain a sufficient adhesive result in covering from 65 to 70 square feet per pound with this glue. We have never

used hide glue extensively in our work, but in the tests made, 40 to 45 square feet with a 9c glue was about the best result we could obtain. This spread with the hide glue gave a very good adhesive result, but I have found by test, that 50 to 55 square feet of spread with the Perkins cold glue gave practically as good an adhesive, in other words, one pound of the Perkins cold glue accomplished the same result as 1¼ pounds of the 9c hide glue.

I have found Mr. Perkins' glue to stand atmospheric changes better than anything I have ever seen or used in the glue line, outside of expensive water-proof glues.

Hoping that this information will prove of service to you, I am,

Yours very truly, Nelson Windsor.

[fol. 891] DEFENDANTS EXHIBIT WINDSOR LETTER No. 74

Poplar Bluff, Mo., 6-30-'06.

R. M. Parker, Esq., President Brooklyn Cooperage Co., 184 Front St., New York City.

DEAR SIR: Enclosed please find express receipt for a package containing 5 veneer heads, which I have forwarded to you today. On examination you will find that the sheet on one side of each head is defective, because the timber is decayed. This timber is decayed because of the spoiling of the ends of the logs in the woods, which usually takes place, to a certain extent, at this time of the year. We have always, heretofore, used such defective sheets in the veneered heads, but have always shipped same to the Brooklyn factory. Inasmuch as the heading which I am making is being shipped to Goepper Bros. Co., whom I take it are customers, it has occurred to me that they might possibly object to heads with sheets the same as the samples show, being put into them, and I, therefore, forwarded these heads to you for your decision, and am keeping this defective timber separate, that is not putting it in the stock being manufactured for Goepper Bros. Co., until I hear from you. If you wish, this defective timber can be worked into box shook tops and bottoms, the same

way as we work it in the heading, thereby handling it ourselves.

As early a reply as possible would save me the expense of a continued separation of this defective stock from the good.

Yours respectfully, Nelson Windsor.

P. S.—These decayed sheets if put in center weakens head too much.

[fol. 892] DEFENDANTS EXHIBIT WINDSOR LETTER No. 75

Poplar Bluff, Mo., 7-10-'06.

R. M. Parker, Agent, 184 Front St., New York City.

DEAR SIR: Referring to your favor of the 2nd instant relative to the disposition of defective decayed sheets, which I am getting in the manufacture of three ply heading. I have discussed the matter thoroughly with Mr. Langlotz, and he recommends using the defective sheets as the middle or center sheet of the heads.

To complete Goepper Bros. Company's contract of 19⅛" veneer heading, I must still make 80,000 set. If we were allowed to make 10,000 or 12,000 set of 19-1/16" for Brooklyn, along with this, all the defective stock can be taken care of without sending any to Goepper Bros. Co.

In order that I do not give you a wrong impression regarding the amount of spoiled timber we have, I should say that all the large decayed timber is being used in the manufacture of veneer heading, which makes the percentage of the spoiled timber to the un-spoiled being used in the veneer heading alone, large. The percentage of the spoiled timber in comparison to all the large timber I am manufacturing into both boxes and veneer heading, is somewhat under 4%.

Yours respectfully, Nelson Windsor.

[fol. 893] UNITED STATES DISTRICT COURT, NORTHERN DISTRICT OF ILLINOIS, EASTERN DIVISION

No. 127. In Equity

PERKINS GLUE COMPANY, Complainant,

vs.

SOLVA WATERPROOF GLUE COMPANY, BURCH-KANE COMPANY, LOWELL R. BURCH, and THOMAS B. KANE, Defendants

STIPULATION RE CERTAIN EVIDENCE, ETC.

It is hereby stipulated by and between the parties to the above-entitled cause for the purposes of this suit only, that the annexed document is a true, full and correct copy of a letter-press copy of a letter bearing the signatures of Lowell M. Palmer and Frank G. Perkins in one of the press-copy-books of Lowell M. Palmer now in the custody of the Brooklyn Cooperage Company at its New York office; and that said copy may be taken as a correct copy of the original letter and used in evidence as such by either party with the same force and effect as the original letter if duly produced and proved, subject to correction should error be found to occur.

It is further stipulated for the purposes of this suit only, that the debit s-de of the ledger of the Brooklyn Cooperage Company shows the following original entries:

May 22, 1905, to F. G. Perkins, 4450.33
June 9, 1905 to F. G. Perkins, 4491—
August 15, 1905, to F. G. Perkins, 4552.15
February 24, 1909, to F. G. Perkins, 4071.59.

And that said ledger is one of the regular books of original entry of the Brooklyn Cooperage Company, and that the above copy of entries may be used in evidence with the same force and effect as would be accorded said ledger if duly proved.

Gorham Crosby, of Counsel for complainant. John B. Macauley, Counsel for defendants.

[fol. 894] Mar. 3rd. 1905.

F. G. Perkins, Esq., 192 Fulton Street, N. Y. City.

Dear Sir: Referring to interview held with you in my office today, we have purchased from you and you have sold to us all of the wood working glue of your manufacture that we shall require in our business at Poplar Bluff, Mo. for the period of one year, at the price of 7 cents per lb. F. O. B. New York, or at the price of 7½ cents per lb. F. O. B. cars Cairo, Ills., with the understanding that the glue furnished is to do satisfactory work, that it is to surface not less than 70 square feet per pound, and make a sugar barrel head that is sufficiently adhesive to meet our requirements.

You can ship two carloads of glue immediately consigning it to Lowell M. Palmer, Poplar Bluff, Mo. via Cairo care of Iron Mountain R. R. at Cairo, Ills.

Yours truly, Lowell M. Palmer, President.

Accepted. *Accepted.* Frank G. Perkins.

Copy.

Plaintiffs' Exhibit Baker Letter 11

Hotel Ill., Cairo, Ill., 11/14-06.

Mr. F. G. Perkins, South Bend, Ind.

Dear Sir: We are getting a long slow the tanks are about ready the Pipe fittings Havent came in yet the machine shop is crowded and it seams Hard to get any thing done the Machine Spreader is set up except that extra Piece of Casting that was broken in shiping and it was being drilled yesterday at noon i took sick yesterday morning and Havent been able to be up yet iff i dont get better by evening i will go over Home untill i do get better i Hate to do it but i think it will be the best i am to sick to write now

Yours respectfully, Frank Baker.

[fol. 895] PLAINTIFFS' EXHIBIT BAKER LETTER 12

Hotel Illinois, Edw. C. Allen, Proprietor

Cairo, Ill., 11/30 1906.

Mr. F. G. Perkins.

DEAR SIR: Your letter of the 28 just received and not-your desired changes in our formula and think it will be good, i will mix a batch to morrow morning 2 parts of #95 and 1 part 68 and 2¼-1 and advize you later as to results i Have tested the Pressure this afternoon as you sed and will Open them to morrow and save them for you.

I had a nice thanksgiving dinner and a good time Family is well and i am feeling prety good.

Yours truly, Frank Baker.

PLAINTIFFS' EXHIBIT BAKER LETTER 13

Hotel Illinois, Edw. C. Allen, Proprietor

Cairo, Ill., 12/10 1906.

Mr. F. G. Perkins, South Bend, Ind.

DEAR SIR: We are getting on all right i am sending you a copy of the report of bodies turn out today and Mr. Summerwell thinks it is go good but i dont think it is good enough yet i think the mixture i am using now will be better

#95-240 |		
83-200 |		
68-280 |		
gum-280 |	560	900

mixed 2 ½-1-1% salvnt you no we have get only a small amount of 68 and gum and that is all the thin body that is Here and we will be compeled to use some lite body all the time i think 16 bags of 68 and probly 10 or 12 gum

I thought i would tell you this so you wouldent over look it Mr. barns says the tables or coming all right the machine is working fairly good the rolers dont seam to put

[fol. 896] on enough without opening up the glue Boxes two mutch that is i Have to Have a small roll of glue in front of the rolers in order to get a good spread and leave no Patches without glue
Hoping you are Having good success and good Health I am feeling fine i Have gained 8 lbs.

Yours truly, Frank Baker.

PLAINTIFFS' EXHIBIT BAKER LETTER 14

Hotel Illinois, Edw. C. Allen, Proprietor

Cairo, Ill., 1/11, 1907.

Mr. F. G. Perkins, South Bend, Ind.

DEAR SIR: Not hereing from you for several days i feel some what uneasy about you i supose you are very buisy i found when i got here they had a batch made that was verry dark and running thin guy sed he had 2 or 3 the Same way while i was a way at P. B. So i seen the trouble at Once and took charge of the mixing my self and Stoped the trouble of Over Heating to mutch Heat Seams to Kill the glue and make it run thin So i took guy and showed Him just where to stop the Heat Which I Had done before but He dident seam to catch the Point. the old man west told me He told guy that He was making dat glue a Heap Hotter dan dat other man did
the blisters are running a bount 1 ¼ to 2% it seams the most of the blisters on fault of the glue occur on the corner of the table evidently not enough glue at that Point I see Mr. Pine and Mr. Bennett Have arrived Here and Have gone dident Stay verry long As usual sutch men dont pay mutch atention to small details you no if we change the other Press we will Have to Have a brick foundation built for they set on solid.
they Have a bout 30 bls. of glue on Hand
Mr. Whitney is able to be around the mill a gan
I am yours as ever

Frank Baker.

[fol. 897] PLAINTIFFS' EXHIBIT BAKER LETTER 15

Cairo, Ill., 2-14-1907.

Hotel Illinois, H. L. Allen, Proprietor.

Mr. F. G. Perkins.

DEAR SIR: I have your letter of 11 and see you Havent got the new spreader started i supose you Have by this time and I hope it will work satisfactory for we want one here as soon as possible

We put in a batch of the new formula and they are using it today it flows a little stringhey short like but i think we will get a good stick I am inclined to think we need a Pump Here to make sure of a flow under all circumstances

Hoping your Having good success with the machine I am yours as ever

Frank Baker.

PLAINTIFFS' EXHIBIT BAKER LETTER 16

Mar. 31, 07.

The Oliver, South Bend, Ind., F. L. Guillaume, Manager.

DEAR FRANK: Reached here Fri. night, and saw that my letter to you from Richmond, arrived too late to reach you before you went away, and also a wire I sent to tell you when I should return.

The glue is working well on the big machine but the little one is "down" because of the breaking of a lug on R. H. side of lower glue box, through which the screw runs, which sets up the scraper.

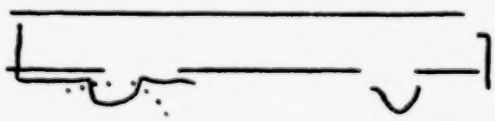

Broken off where dotted.

This was done on acct. of undue strain probably upon monkey wrench on the wheel, the slide being strained forward more on one side than other & thus cramping it.

[fol. 898] It occurred Wed. and had not been fixed. I hope to get it fixed Monday.

The new machines are slowly advancing.

The "flow" here is very much better and no trouble at all in the piper or when starting up, and no scale on top.

This is prevented by starting early to cook, and at 1 p. m. putting cold water into the outside jacket of kettle and at 100°, stirring all afternoon so that when night comes the whole mass is cold throughout, instead of being warm in part.

I very much hope you found all well at home, and please give my best regards to Mrs. Baker.

Shall be glad to hear from you on matters in general. When will they start at P. B.

So you think that the young man who used to keep the piping etc. up on dryers would like to go to Fla.?

We could use a man there and he would have a good chance to work up.

The climate is much better than at P. B.

With regards

Yours sincerely, F. G. Perkins.

Defendants' Exhibit Perkins Letter No. 5

Lake Mary, Fla., Jan. 27, 1905.

Mr. Nelson Windsor, Manager, Lowell M. Palmer, Poplar Bluff, Mo.

Dear Sir: Our car C. P. & St. L. 21546 was delivered to I. C. at Martin Jan. 19th and should now be at your mill; Martin being near Cairo. If so kindly wire me.

The materials I use for extra water-proofing and kerosene oil proofing, were sent separately and partly by express.

As a manufacturer myself, appreciating the value of uniformity, I can state to you that absolute and unvarying uniformity marks all our products. After I determine the degree of thickness, flow etc., which your veneer machines require, for as long as you use our glue, you will find no variation.

Yours very truly, F. G. Perkins, Pres't.

[fol. 899] DEFENDANTS' EXHIBIT PERKINS LETTER No. 1

Telegram

New York, 3-3, '05.

Nelson Windsor, Poplar Bluff, Mo.:

Have closed contract. Mr. Palmer has written authorizing necessary equipment.

F. G. Perkins.

DEFENDANTS' EXHIBIT PERKINS LETTER No. 3

Lake Mary, Fla., March 11th, 1905.

Mr. Nelson Windsor, Supt., Lowell M. Palmer, Poplar Bluff, Mo.

DEAR SIR: Enclosed herewith please find sketch of stirrers for your mixing tanks, same being such as we use in our mill down here. Mr. Perkins requested that we send you this sketch.

You will see that the stirrer is halved in the middle for a distance of three feet, and in the center of this halved space, the hole is made to take the iron pipe or shaft; whichever you use. This hole must be made so as to make a snug fit around the pipe or shaft, and we use a brass key 5/8" square to help hold the stirrer in place on the shaft. If pipe is used, key-way can only be cut in same about 1/8" deep in the center, as otherwise the complete stock of the pipe will be cut through. A 1/8" key-way cut in the pipe would be sufficient to hold it in place along with the bolts which clamp the pipe very firmly, when drawn up. Of course if shafting is used, you can cut the key-way as deep as you wish.

We use 4 bolts on each side of the pipe and would advise you to use brass key, bolts and washers.

If your mixture is to be very hard to stir, and thick, would advise you to let the ends of your stirrer come within a few inches of the sides of your tank; if on the other hand, the mixture flows readily, the ends of the stirrers can be kept farther away, as the liquor will more easily be kept stirred in the corners.

[fol. 900] The center of our stirrers for a distance of about 4 feet, is left square, the remainder of each end is bevelled off at an angle of 45 degrees, and 2 inches of stock is left, per the sketch sent you. The sketch is made so as to run in the same direction as the hands of a watch, this will have a tendency to throw the liquor down towards the floor of the tank. If you wish you can reverse this, and run the stirrer the other way, or run it the other way as it is, but we prefer the way first noted.

We would advise you to use 6 x 8 oak with the hole for the pipe bored through the 6" way.

Yours very truly, Planters Mfg. Co., by J. B. B. Stryker, Local Mgr.

DEFENDANTS' EXHIBIT PERKINS LETTER NO. 9

3/13/05.

DEAR MR. NEWTON: Yours of 7th just reed. If you have reed. no satisfactory bids, J. S. Bush & Co., Peoria, Ill., are very reliable and low priced. For your work I would not advise iron, especially in view of substances we will use for tight heads.

You mention "Parallel sides." Would suggest the usual taper, as parallel sides are very hard to keep tight.

It is very doubtful if for indoor work cypress is very much more useful than pine. I have known pine tanks to run over 20 years in perfect order yet. In Fla. cost is same but North it may be quite an item.

I think Busch would make pine tanks abt. $27 each.

I will leave Washington 18th for the Bluff, due there 21st. No Baker misunderstood me. You dump the glue right in, in your case. My remark only applied to the small exp. tank there. No; I don't think you absolutely need an agitator that will lift, but it usually costs as little as a non-lifting one, and is mighty handy. Moreover, if you make partial batches by adjusting agitator you do not whip air into the glue, and you will recall a case I showed you, where the bubble interfered with the "coating" effect.

I believe, were I you, I would put in the lifters and then we are ready for anything.

Paddle: After think this over, I believe we will do better to make this longer, missing sides by about 6" only, to avoid [fol. 901] uneven mixing, and partly mixed glue caking to sides.

Piping: We don't need the bottom line. Just a simple 1¼" pipe, swung from an elbow, so that if necessary you can just swing it up clear, i. e. if valve should leak.

We make our intermediate connection with a piece of stout 1" steam hose, long enough to clear the pipe away from tank.

The clearer the tank is, the easier to keep clean and simply hot water is enough just as you describe, once a week.

With kindest regards,

Sincerely yours, F. G. Perkins.

DEFENDANTS' EXHIBIT PERKINS LETTER NO. 6

St. Louis, Mo., Mar. 19, 1905.

FRIEND NELSON: I will be down on Monday night. Just got word that the car of glue passed Atlanta 14th so it must be near you.

L. M. P. is very hopeful we can produce a waterproof head that he can use for flour barrels, big business he says; 17⅛" hd. I believe.

With your help it can be done.

With sincere regards,

G. F. Perkins.

DEFENDANTS' EXHIBIT PERKINS LETTER NO. 8

Memphis, Tenn., Mar. 22, 1905.

FRIEND WINDSOR: I left last night so as to gain time, but as usual the I. M. can't go anywhere on time and we reached here 1 hour late, missing the Frisco connection to Birmingham which would have got me home tomorrow evening. I lose a whole day here.

Will you be so kind as to wire me when all is ready, or say 2 days before you are sure all will be ready.

While "you all" are more than competent to run perectly, even if I did not go on at all, yet it is my great desire hat not a pound be wasted, or an hour's time. I feel so ndebted to you for your help that on no account shall a [fol. 902] cloud, even of the most temporary description ross your sky, on my account.

This will be my last visit to my plant for months, probably and I will stay until you wire, and please do so to Sanford, Fla., a town 4 miles away, to which I have a telephone.

I enclose a list of the "Heavy body" and "Thin Body" in the car overdue.

If you could pile in 2 lots it would save rehandling. As ever,

Sincerely yours, F. G. Perkins.

DEFENDANTS' EXHIBIT PERKINS LETTER No. 7

Cairo, Ill., May 8, 1905.

DEAR MR. WINDSOR: I find that I can't return today, so we will expect you and Mrs. Windsor at supper Wednesday night at the hotel.

We will arrive at P. B. tomorrow, Tuesday night, but I wanted to forewarn you.

Yours sincerely, F. G. Perkins.

DEFENDANTS' EXHIBIT PERKINS LETTER No. 11

Cairo, Ill., May 8th, 1905.

Lowell M. Palmer, Esq., Poplar Bluff, Mo.

DEAR SIR: Referring to that part of enclosed bill for materials used for tight headings, I desire to say that while the amounts sent is in excess of our present case, it was not practicable to get out a smaller amount and the excess can be returned when desired and full credit will be given.

The only considerable item is for the #3 Glue which we had expected to also use on the regular glued heads but after I had sent it, a way was found to do away with its use on regular headings and thus make an economy, so I

have put it under the tight heading use, because we will largely use it there.

[fol. 903] As I am desirous that your work be done at the lowest cost I have secured a proposal from a manufacturer whereby you can buy the solvent direct @ 2¾c per pound F. O. B. St. Louis, providing you order at one time ten tons to be delivered as wanted. This would last you about three months.

As above stated you can take it in small lots of 5 to 10 barrels at a shipment.

Yours truly, Frank G. Perkins.

DEFENDANTS' EXHIBIT PERKINS LETTER NO. 10

New York, June 13, 1905.

Lowell M. Palmer, Esq., Poplar Bluff, Mo.

DEAR SIR: I enclose credit memo. for Glue lately borrowed for use at Singer Mfg. Co., and thank you for courtesy.

As a partial offset I suggest that 1 ba*f* and 2 bbl. of glue, which I shipped to Poplar Bluff Feb. 1, from Chicago and which has not heretofore been billed, be allowed to stand, as I paid the freight on same, and enclose invoice. We used the bag and a part of the 2 bbls., balance being in your storehouse, and I propose using them on tight heads on my near return.

Please charge me with the cartage to depot on this and preceding lot sent Singer Co.

Yours truly, F. G. Perkins, Agt.

DEFENDANTS' EXHIBIT PERKINS LETTER NO. 12

Chicago, August 5th, 1905.

Mr. Nelson Windsor, Supt., Lowell M. Palmer, Poplar Bluff, Mo.

DEAR SIR: I received your telegram last night. I presume the two car loads consist of one car which I sent from

'lorida July 7th, and which is all thin body goods, and a ar which I sent July 18th, from New York, consisting of oth kinds of goods.

fol. 904] Mr. Palmer permitted me to send him the three ar loads consisting of the above two and one which I pre- sume has just left New York and which is all heavy body.

The invoice and B/L for the July 7th, car was delivered to Mr. Palmer's New York office, by me, on July 14th, and the documents covering the second car was sent him a few days ago and I trust will have reached you by this time. It consisted of 77 bbls., thin body, 57 bags 240 lbs. each of thin body, 20 bags 100 lbs. each of thin body and 146 bags of powdered heavy body.

The third car on its way to you contains 305 bags all powdered heavy body.

I trust there will be no delay ensue on account of your not receiving the necessary documents from New York, for Mr. Palmer gave me the above co-operation in order to assist some urgent financial needs and I was becoming somewhat anxious at not hearing from the first two cars.

Yours very truly, F. G. Perkins.

Defendants' Exhibit Perkins Letter No. 15

Chicago, August 22nd, 1905.

Nelson Windsor, Esq., Lowell M. Palmer, Poplar Bluff, Mo.

My Dear Sir: I have yours of the 15th, about the empty glue sacks. I will advise you very shortly about this. To my surprise I found the rate back to the factory on these was almost confiscatory and it may be necessary for us to resell them at a loss in St. Louis or Chicago. I will know by Thursday and will promptly write.

A remittance has arrived from you for which I thank you. We still owe you for the glue which you obligingly shipped to Cairo. I thought as you were not pretty well stocked up, that I would hold this until you started up again in the fall, at which time we expect to be prepared to send one kind instead of two. We will soon have a place here to

complete the tight barrel work and should you go away I presume the heads can be sent up.

Yours very truly, F. H. Perkins.

[fol. 905] DEFENDANTS' EXHIBIT PERKINS LETTER No. 2

South Bend, Indiana, May 28th, '07.

Mr. Charles Langlotz, Mgr., R. M. Parker, Agent, Poplar Bluff, Mo.

DEAR SIR: I find that your letter of May 20th, was not fully answered, under the impression that my letter to you of the same date, covered the points.

I have received an order from Mr. R. M. Parker, for a car load of the light body glue and the same had been ordered to you, with every possible urging and will be vigorously traced after it starts, and I presume it has already started.

My arrangement with Mr. Parker, was that I should receive the money upon receipt of the checked bill from Poplar Bluff, by his office, and I have no doubt that as before, your office will accommodate me by promptly checking the bill as soon as the goods reach you.

I ordered to you the 25 bags, at the time the exchange occurred and in the further desire to prevent your being short, I wrote Mr. Whitney, asking him to send you over 3,000 lbs. of light body and should there be any delay, I have no doubt that he will send more to you, in exchange for your courtesy in accommodating him. Should it be necessary to do this, I will of course reimburse him and will send you the bill.

Will you please advise me how much heavy body you have on hand, so that I may arrange my own output accordingly, and be sure to have some on hand for your future supply.

Yours very truly, F. G. Perkins.

FGP—S.

DEFENDANTS' EXHIBIT PERKINS LETTER OF MAY 30, 1907

May 30th, '07.

DEAR FRANK: I leave next Saturday for my business trip and you can address me % Gen. Del. Norfolk, Va., for two weeks and I will advise you my movements when I leave that section.

[fol. 906] I want to mention to you that we find it is very undesirable to use over ½ per cent of soda in our present formulas, for we find that by using more than this, the set is made slow and the stick is not so good, when over 24 h. I have Cairo on the ½ per cent basis and I think that when you go there, you will see that the glue is much stronger on that account and it does not turn black with age. Guy has lately written to me that he carried one batch from Thursday, to the next Wednesday, without its changing on him as it used to do.

Every thing is moving here very nicely and by the time I get back, I hope they will be ready to go on to the glue in room 43.

With best regards,

Sincerely yours, F. G. Perkins.

FGP—S.

DEFENDANTS' EXHIBIT PERKINS LETTER No. 13

South Bend, Indiana, July 22, '07.

Mr. Chas. Langlotz, Mgr., R. M. Parker, Agent, Poplar Bluff, Mo.

DEAR SIR: When I was at your plant you very courteously signified your willingness to reciprocate for the services which I expect to be able to render, by giving such recommendations as would prove of real value in furthering my business.

I am glad to state that an opportunity will soon be offered and I should like to suggest to you the points which will be of most benefit. The Singer Manufacturing Company, having successfully employed my glue in a large portion of its work, is considering its use for all of its work

at its many plants and one of the Eastern officials who has not personally seen the glue work, has suggested that your plant be written to, since you have had an opportunity to judge of the results for several years.

I feel that I can justly expect a good report and in case you are written to on the subject by the Singer Company, shall feel under much obligation to you if you will state to them, about as follows: "that since your beginning the use of the glue in January, 1905, a good many million heads have been glued up and that so far as you know not a single [fol. 907] complaint has ever been made, in spite of the fact that the service is very exacting, the work being very largely out doors and some times in damp canal boats, and that in times past, complaints were often made. That you found it superior for your purpose over any other glue which you tried, and that the manufacture-, Mr. F. H. Perkins, has served you promptly and efficiently, and that you place confidence in him, and that a considerable saving is made by its use."

I would suggest to you that it would be better not to mention Casein, or any other competing glue, in specific terms, for the letter will be most useful if the points are brought out which I have sketched in and the effect on their minds produced by a few broad strokes, in your own forcible way.

Thanking you in advance for this service and assuring you that I shall find it a great pleasure in the future to reciprocate this courtesy, I beg to remain, with kind personal regards,

Yours very truly, F. G. Perkins.

FGP—S.

DEFENDANTS' EXHIBIT PERKINS LETTER NO 14

South Bend, Indiana, July 22, '07.

Mr. Chas. Langlotz, Mgr., R. M. Parker, Agt., Poplar Bluff, Mo.

DEAR SIR: As a result of my inspection at Poplar Bluff, I would recommend for the present, that a formula of mixing the glue be used as follows:

For each 1,000 lbs. of glue, first draw 13 in. of water in the tank and turn on the steam, heating it to between 100 deg. and 110 deg. Into this warm water the glue should be stirred and there should be if possible one hour of thorough mixing before adding solvent. The solvent should be used to the amount of 60 lbs. of solvent to 100 lbs of dry glue. The solvent should be dissolved in three times its own weight of water and after being thoroughly dissolved, should be slowly added to the mixture of glue and water in the tank below. The glue should be thoroughly and steadily agitated while the solvent is being added. The [fol. 908] slower the solvent can be added the better and not less than two hours should be used in adding it.

Under some conditions of the weather, it is possible to use about 55 lbs. of solvent, to the above formula, instead of 60 lbs. and a little practice will show this. When done, the mixture will be of a yellowish brown color and after standing awhile, it will become darker. The best results will always be had by mixing up only enough for one day's use at a time. After the glue is one day old, it does not set so quickly nor produce so strong a joint, as when used immediately after mixing.

I am at work getting estimates and having a blue print made for your other work and you will shortly hear from me on those points. Awaiting your further commands,

Yours very truly, F. G. Perkins.

DEFENDANTS' EXHIBIT PERKINS LETTER No. 21

South Bend, Indiana, July 27, 1907.

Mr. Chas. Langlotz, Mgr., R. M. Parker, Agt., Poplar Bluff, Mo.

DEAR SIR: I have your valued letter of the 24th, and beg to say that you are quite correct in believing that it is 60 lbs. of solvent, to 1,000 lbs. of dry glue. My own was a typographical error.

With regard to the price on this solvent, I do not think you can get it any where now, for less than 3¼ cts. I am paying that in New York city and reselling to other customers. I regard this price as too high and am engaged in

direct negotiations, which may result in a lower price. We can buy it at a lower price, provided we take it in an iron drum, in one solid cake, but it is an awful nuisance to chop this up, for the stuff gets in the hair and on the face and you can imagine the uproar.

As soon as I get any better prices, I will promptly advise you.

Thanking you very much for the assistance contained in your last sentence. Awaiting your further favors, and trusting that you will allow me to reciprocate.

Yours very truly, F. G. Perkins.

F. C. P.—S.

[fol. 909] DEFENDANTS' EXHIBIT PERKINS LETTER No. 4

South Bend, Indiana, August 10th, '07.

Mr. Chas. Langlotz, Manager, Mr. R. M. Parker, Agent, Poplar Bluff, Mo.

DEAR SIR: Relative to the information requested by you, I beg to say, that since the original installation of the Glue machinery at Poplar Bluff, certain improvements have been made in the machinery itself, and also in the formula used on my Glue.

Taking up the machinery feature, I will recall to you that in all kinds of glue, under the old methods, considerable waste of glue is found at the edges of the glued up stock, and this waste hardened makes the layers of wood adhere together on the edges, so that considerable force is necessary to separate them.

On this account, not only is there a waste of glue, but the waste of glue involves some damage to the glued up stock, resulting in culls and also requires the labor, as in your case, of an extra man to open up the stock.

Impressed with this point, I was able to invent a gluing-up machine which has done away with these troubles. Instead of the glue applying rollers, rolling upon each other, by my arrangement, they are separately hung and can be adjusted at any distance, and yet have a continuous supply of glue, while this same supply of glue is now capable of close regulation.

It is not my desire to make any profit out of these methods, from my customers, and if you elect to obtain the above advantages, I will remodel your machines, without profit to myself, charging you the exact cost thereon, which I estimate to be about $250 each, on your two machines, exclusive of freight, and I think it is safe to say that you will save this cost inside of a year.

Another point where an improvement can be effected, is by using larger pipes from your tanks to your glue machines, and connecting up therewith a full opening pump, so as to propel the glue from the mixing tank to the machines.

This will allow you to use a heavier glue solution, which increases the strength of the joint and allows a larger spread of the glue, by which I mean that the full strength of the glue being available, it permits closer regulation on [fol. 910] the machine, so that a pound will be used to its full value.

Furthermore, by reducing the amount of water, a quicker set is obtained and there is less swelling of the wood, which as you know, now is a source of breaking to your retainer bolts. It always seems to me wise to do what ever will reduce the repair bill.

As previously stated, the above points are a result of the march of improvement and would be advisable, no matter whether you were using my glue or hide glue.

Coming now to the point of the formula used, I will recall to you that you are now using at Poplar Bluff the same methods of dissolving and cutting the glue, as were used by all of my customers, until within about one year, at which time I discovered another method of doing it, wherein we are able to reduce the amount of solvent, from 6% of the weight of the dry glue, down to one half of one per cent. In addition to this saving in the cost of the solvent, it does away with the necessity of rubber gloves on the hands of the men who are working in the glue, hitherto necessary because the 6% of solvent smarts the hands.

This method of cutting the glue, by ½ of 1%, of solvent, requires the use of double jacket, iron or steel tanks, instead of the wooden tanks which you now employ. The glue is heavier than the glue made under the old formula, hence it also requires the larger pipes and the glue pump above mentioned.

The advantage of the new formula being stated, I wish now to state its disadvantages, of which I was not aware when I discussed the point with you on my late visit to P. B.

I was under the impression that we were covering up here, with the new formula, about the same amount you are covering at P. B. with the old formula, but now having access to the full reports covering one year's use, I see that such is not the case and that we are not covering by about 10% with the new formula as much as you do at P. B. on the old formula.

I believe, however, that this is due to the fact that we did not get the machines fully adjusted until very lately and the records now appear to bear me out in the statement that we can cover as much with one formula as the other. It does, however, require a little closer regulation to accomplish this because in the old formula the glue gains bulk and hence is able to spread over more territory, than under the new formula, which does not gain bulk, unless this fact is understood and provided against by the aforesaid closer regulation.

[fol. 911] I am not able at this moment to give you an estimate on the cost of the new tanks, should you decide to use them, but I shall be very glad to send you the set of blue prints of the arrangements put in by the Singer Company, so that your whole output could be modelled like their successful one.

With regard to putting in the new Glue lines from the glue tanks to the machines and the pump, I should estimate that this would cost about $200.00.

If I have not covered all the points, I shall be very glad to furnish you any further information. If you should deem my opinion of any service, I should say that if the plant were mine, I should fix over the glue machines, enlarge the glue lines and put in the pump, for it is very clear to me that this entire expense will be saved within twelve months, and meantime, add a great deal to the efficiency of your plant, but I should not change the formula until I can positively assure you, from actual results, that you would gain money by the change. While it would be pleasant to cut down the solvent and save the gloves, yet there is no trouble with the labor on account of their hands, when given the gloves and I should not want you to go into any

expense on the tanks and then find that your work cost you more money than it did before.

Respectfully yours, Frank G. Perkins.

FGP—S.

DEFENDANTS' EXHIBIT PERKINS LETTER No. 16

South Bend, Indiana, Sept. 12th, 07.

Mr. Chas. Langlotz, Mgr., R. M. Parker, Agent, Poplar Bluff, Mo.

DEAR SIR: I am in receipt of your favor of Sept. 9th.

Veneer lathes: As I recall it, you mentioned to me that you were authorized by Mr. Parker, to sell these two lathes, with all missing parts replaced, for 50% of the cost price, to the Company, and as I remember it, further, you mentioned that the price new was $1200 each and at half price, this would make the cost of the two at $1200 now.

I wrote that I thought that I could get $1000 for the two, you will remember, so that really there is not a very large [fol. 912] margin between us, if the recollection above stated is correct. Will you do me the favor to advise me if those figures are correct.

Heavy and Light Body Glues: The letter which you mention as being shown to you by Mr. Parker, was in reply to one from him, which implied that in future, they should order only one grade. I replied to him saying that of course I should furnish any thing which was ordered, but that Baker had found he could get a larger covering by making different proportions in winter, from the summer. Now you are perfectly correct in recalling that I told you that I could and would make you one grade. If you advise me that a grade corresponding to 50% heavy and 50% light, suits you, I will make you a grade that will exactly reproduce this. My only point was that I believed you could save a little money by making the blend yourselves, because I thought you would prefer a somewhat different blend in the summer, from the winter. I could furnish you a car which would contain one half of each kind, in case that would seem desirable. In fact, my sole and only wish, is to furnish you whatever will be to the best economy and interests of your factory.

Present order: I carefully note what you write about supply on hand and will certainly get you a supply in season. If necessary, I shall ship you a small car on the order, from South Bend stock.

I will certainly go over and see you when I go to Cairo next. I have not been there since the time I last called at Poplar Bluff.

With very kindest regards,

Yours very truly, F. G. Perkins.

FGP—S.

DEFENDANTS' EXHIBIT PERKINS LETTER No. 18

South Bend, Ind., September 25th, '07.

Mr. Chas. Langlotz, Mgr., R. M. Parker, Agent, Poplar Bluff, Mo.

DEAR SIR: I have your valued letter of Sept. 17th.

In regard to the question of sending in future, the right kind of glue, I will certainly take upon myself to see that you have just the right article, so far as strength goes and if Baker thinks that a glue duplicating the present blend [fol. 913] is the best, I will furnish the same in future, since it seems to be in your opinion, more convenient to have it that way.

I was under the impression that Baker varied it from time to time, more than it now appears was the case.

I quite agree with you that the responsibility really is on me and only desired that you should have the very best article.

The glue sent you on your last order, is all light body, and no doubt when it arrives you will be in a position to determine the proportion in the next car, in order to clean up the light body, and after the balance is struck will ship the balance of the next car, properly marked and of such nature that it shall be used alone. The delays of transportation are so great, and also the factory is so very busy, that I trust that we will receive your valued order for this, at your earliest convenience, in order to avoid any anxiety. It would seem to me that it is not safe for you to work with

less stock on hand than one car of glue, as we have had instances of our cars being three months on the road.

With kindest personal regards,

Yours very truly, F. G. Perkins.

FGP—S—G.

DEFENDANTS' EXHIBIT PERKINS LETTER No. 23

Water-proof Glue. Heat-proof Glue

Frank G. Perkins, Manufacturer Special Veneer and Furniture Glues, 211 N. Lafayette Street, South Bend, Indiana

From Lake Mary, Florida, November 5th, '07.

Mr. Chas. Langlotz, Mgr., R. M. Parker, Agent, Poplar Bluff, Mo.

DEAR SIR: This is just to advise you that I have not yet received any order from Mr. Parker for another car load of glue, which you requested him to order.

[fol. 914] I presume that within a few days, if not already, there will reach you the car of glue so long on the road, as I wrote you on Oct. 18th.

I have now worked out the right goods to send you in future, to avoid sending two kinds.

I remain, with kindest personal regards,

Yours very truly, F. G. Perkins.

FGP—S—G.

DEFENDANTS' EXHIBIT PERKINS LETTER No. 17

From Greenville, N. C., November 22nd, 1907.

Mr. Chas. Langlotz, Mgr., Mr. R. M. Parker, Agt. Poplar Bluff, Mo.

DEAR SIR: I am in receipt of a letter from Mr. Parker telling me of some trouble that has been experienced with the heading, and requesting me to go as soon as possible to the Bluff and see what the matter is, and advise him. I will go to the Bluff just as soon as I finish some work here, but I feel quite sure that the causes for any trouble could

be at once removed, and that Frank Baker's judgment on the causes and cures ought to be much better than my own.

In all kinds of glueing a very great deal depends upon the judgment of the man in charge of the glueing. In the use of the Hide Glue for example as the seasons change, the mixture must be altered in its components.

The glue is exactly the same as it always has been, so that the causes of the trouble ought to be found outside of that.

I should suppose that the troubles are either that the formula may need some readjustment on account of the weather, or on account of other factors; or with the tank and machines not working right.

One thing I would suggest that fresh glue be used in as much as you are only using about one third of the quantity which those tanks were designed to handle. The glue is always stronger when just mixed than it is after standing some hours, and to give the very strongest results it is best to mix up the night before about enough glue to run the following forenoon, and then mix up during that forenoon the proper quantity for the afternoon work.

[fol. 915] This point, of course, takes care of itself at 2500 pounds per day used, but it should be taken into consideration when only from 800 to 1200 pounds are used per day in those large tanks. It can be said now for certain that the trouble is in some of those points of handling or in some defects of the appliances or equipment, and I should rejoice if the matter can be straightened out before I reach Poplar Bluff, as it has so much better effect.

Of course my very best services are at your disposal.

I remain,

Yours very truly, F. G. Perkins.

FGP/VMW.

DEFENDANTS' EXHIBIT PERKINS LETTER No. 24

Formula for Using Glue

Office of R. M. Parker, Agent

Poplar Bluff, Mo., 12-12, '07.

R. M. Parker, Agent, Poplar Bluff, Mo.

DEAR SIR: I would suggest for your present conditions, the following formula: Use a mixture of 2 parts light and 1 part heavy.

For each pound of glue, use not to exceed 3½ parts of water by weight, and less than this amount would be better, provided you can flow the mixture through your present system of pipes. Would use 6½ to 7% of the weight of the glue, in dry solvent, mixing this solvent with three parts water, before adding to the mixture.

This would work out as follows:

For each 1000# of glue, first draw 13 inches of water in the tank, and warm it up to 100 Deg. Into this warm water stir the glue, and if possible give it one hour of mixing before adding the solvent. The solvent should be used in the proportion of from 60 to 70# of dry solvent per 100# of glue, dissolved as above, in three times its own weight of water and slowly added. The mixture of glue and water must be thoroughly and constantly agitated while adding the solvent, and the slower the solvent is added the better, and not less than two hours should be used in adding the solvent. The best results will always be had by mixing [fol. 916] up only enough glue at a time for one day's work.

As soon as your pipes and stirring equipment is made standard, the mixture above given should be changed, so as to leave out all the water possible, and the covering capacity can be brought up to its standard by changing the grooving of the rolls, and arranging the machines so as to prevent the present slop and waste. A very bad point about the present end slop and waste, is that it binds together the edges of the bale, so that the joints while green, are subjected to very violent abuse, in order to separate them. This should not be done, and I will undertake to prevent

the same by remodelling your machines. This would no doubt prevent a good many culls.

Yours respectfully, F. G. Perkins.

(Pencil notation at foot of letter):

262 lbs of water to 1'' in depth of tank
13

786
262

3406 lbs. water to 1000 lbs. glue or 3 4/10 to 1.

DEFENDANTS' EXHIBIT PERKINS LETTER No. 22

South Bend, Indiana, December 17th, '07.

Mr. Chas. Langlotz, Mgr., R. M. Parker, Agent, Poplar Bluff, Mo.

DEAR SIR: In order to keep matters straight between your New York office and myself, I will hold up the bill for the ten sacks, which I got from the Singer Co., until you can send a proforma order to New York for the same and have them send me an order. Thus everything will be straight all along the line.

It was quite interesting to me while at the Bluff, to observe that 7,500 sets of headings are now produced at a labor cost of very little more than the 5,000 sets, which you were turning out at my last visit and you appear to do this, by using one crew part of the time on a veneer lathe and part of the time gluing up, which makes a very economical arrangement.

I don't think I ever saw a labor expense of producing glued up stock so low as it is at the Bluff.

[fol. 917] With regard to the subject I mentioned over the telephone, namely, of damp stock coming through the Nichols driers, I don't think that I ever saw very good work done when the steam pressure drops under 85 lbs. This is particularly true on stock ⅛ and over. While it is true that the difference in heat units between 100 lbs. and say 80 lbs. is very slight, yet another facto- is present, which is

that to dry out the inner part of a 1/8 veneer, under the Nichols system, the inner moisture must be fairly exploded out and this means that the internal heat of the veneer, must be very rapidly absorbed from the external skin.

The power of conduction of heat is not directly as the difference of temperatures, but is nearer in proportion to the cube of the difference, hence there is a very rapid falling off in the conduction of the heat as the steam pressure lowers. I have taken part in very careful and long continued experiments on this point, with the above results, so that I am not handing out any theory to you, but just passing along those results which were obtained at considerable expense.

It was found for instance that with steam at 60 lbs., on 1/8 and 3/16 veneers, when the normal time of drying was about 15 minutes with 100 lbs. pressure, after the veneers were in the driers for one hour, at 60 lbs., the veneers were not nearly as dry as with 12 minutes at 100 lbs.

It is true that the outside surface of the wood was as dry, but the inner fibers of the wood were not equally dry and after a few hours the whole pieces of veneer reabsorbed the moisture from the damp centers and were unfit to glue up.

You have a steam recording guage, which of course is a great help, in keeping constant steam. It is of course a good deal easier for a fireman to make excuses than it is to make steam, at least I find it so in my own case, and I will again beg leave to say to you that this is based on no wish at all to "but in," but only as deeply interested and sympathetic with your own desire to have the plant make the best possible record.

With personal regards,

Yours sincerely, F. G. Perkins.

FGP—S—G.

[fol. 918] DEFENDANTS' EXHIBIT PERKINS LETTER No. 20

South Bend, Indiana, February 12th, '08.

Mr. Chas. Langlotz, Mgr., R. M. Parker, Agent, Poplar Bluff, Mo.

DEAR SIR: I have your valued letter of the 10th., with enclosures, and all are carefully noted.

Glue Machine: This is in the shop and I find it is necessary to have some patterns made which is now being done. I will advise you in a few days as to the probable time it will take to get this through our hands. The work is a little more difficult to design than I had expected but will have a good job when done.

Soda: This solvent which you use is Sodium Hydroxide, frequently called "Caustic Soda." In order to get the right article, which is quite important, it is advisable I think to have the correct name in mind, as this affords a key to the later description, by figures. The caustic soda commonly sold as such, is a very impure mixture, and has not the desired amount of the hydroxide element. For this, is found substituted the carbonate form of soda, which is of no use whatever to us. This being so, the best manufacturers prefer to sell their article on a guaranteed base of strength and purity and the very lowest grade is supposed to contain a 60 deg. strength, as measured by the hydroxide element. This accounts for your quotation based on that amount. The 74 deg. and 76 deg. cost proportionately more, and we have found that not less than 76 deg. should be employed. I observe that some of the people call this "per cent," but the manufacturers reserve that term as expressing the purity of the constituents in freedom from all matters except "soda." For illustration, an article of 76 deg. 98% pure, is understood by the manufacturers, to mean 76 deg. hydroxide, and the whole article to be 98% of a total purity, leaving 2% for all substances except the various forms of soda.

There is as you may suppose quite a hazy idea in the minds of salesmen regarding this point, but I believe they at bottom are talking about the same article. A 76 deg. article the makers tell me, is necessarily at least 98% pure.

Powdering: I observe one very important omission in all the prices you have received, except possibly in the one from Meyer Bros. For your use, the article must be pow- [ofl. 919] dered and the Whitelaw quotation in drums, is certainly in the solid form, and it would take you at least one man's time constantly, to dig it out. We tried this at the Bluff when we started, I think, and have known of several other users trying to use it in the solid form, and it is an unendurable nuisance, and the waste is very great.

Hence, would suggest you specify it as "powdered." Some of my customers I think buy of the Champion Chemical Co., Chicago, and I will find out where some others buy and advise you as soon as found out.

Glue: I will beg leave to suggest that you arrange to keep at least 40 days' supply of Glue between your ordering, and arrival. This is needed to provide against car service delay and also the possibility that the factory might not be able to ship a car on receipt of notice. We take great care in getting out the goods for your factory, and would not want to ship anything of which there was the slightest doubt. The Singer Company keep 60 days, reserve and once or twice we have been quite close to pinched at that.

Yours very truly, F. G. Perkins.

DEFENDANTS' EXHIBIT PERKINS LETTER No. 19

South Bend, Indiana, May 27, '08.

Mr. Wm. N. Barron, Manager, Poplar Bluff, Mo.

DEAR SIR: The last visit I made to Poplar Bluff, I saw in your warehouse a considerable quantity of casein and as casein now is in rather scarce supply, it occurred to me that it would be a good time for you to dispose of this, if you wish to do so.

The use of casein is now almost altogether confined to various branches of the paper trade, and I have quite an acquaintance among them, and think I could sell this parcel, either on commission, or else if you wish to make a price, I can possibly get my commission above the price.

I think you have there only about 4 tons, but still it represents money and of course if I can get a little something out of it, shall be glad to do so.

Yours truly, F. G. Perkins.

P. S.—We are at last just winding up your machine and it will be painted next Saturday, and to you next week.

[fol. 920] DEFENDANTS' EXHIBIT PERKINS INVOICE No. 1

Mr. Lowell M. Palmer, Poplar Bluff, Mo., Bought of F. G. Perkins, Agent for Planters' Manufacturing Company, 192 Fulton Street, New York

April 29th, 1905.

Terms —.

4 barrels solvent,	2,728 260—2,468	3¾	$92.55

Mail check Lake Mary, Fla.

DEFENDANTS' EXHIBIT PERKINS INVOICE No. 2

Lowell M. Palmer, Esq., Poplar Bluff, Mo., Bought of F. G. Perkins, Agent for Planters' Manufacturing Company, 192 Fulton Street, New York

May 14, 1905.

Terms —.

5 bbls. Solvent 655-62 690-71 653-67 626-63 694-75	2,980#	3¾c	$111.75

3,318-338-2,980 net.

Copy

[fol. 921] DEFENDANTS' EXHIBIT PERKINS INVOICE No. 3

Lowell M. Palmer, Esq., Poplar Bluff, Mo., Bought of F. G. Perkins, Agent for Planters' Manufacturing Company, 192 Fulton Street, New York

May 25, 1905.

Terms —.

April 26	3 pr. Pearl Rubber Gloves #9	.50	$1.50	
" 27	9 pr. " " "	.50	4.50	
	(12 delv'd—3 ret'd.)			
" "	6 pr. cloth lined $11.00 Doz.		5.50	
" 29	3 pr. " " "		2.75	
	1 Baume Hydrometer		.50	
	1 Therm. in wood case		.50	
May 17	3 pr. cloth lined #13 gloves	1.50	4.50	$19.75

Copy

DEFENDANTS' EXHIBIT PERKINS INVOICE No. 4

Lowell M. Palmer, Esq., Poplar Bluff, Mo., Bought of F. G. Perkins, Agent for Planters' Manufacturing Company, 192 Fulton Street, New York

May 27, 05

Terms —.

2 pr. horsehide gloves	.90	$1.80	
Postage		.15	$1.95

Copy

[fol. 922] DEFENDANTS' EXHIBIT PERKINS INVOICE No. 5

Lowell M. Palmer, Esq., Poplar Bluff, Mo., Bought of F. G. Perkins, Agent for Planters' Manufacturing Company, 192 Fulton Street, New York

June 13, '05.

Terms —.

Feb. 1/05.	1 bag glue #42	280#			
	2 bbls 188#, 290#				
	net	378	658#@ 7.2c	$47.37	

Shipped from Chicago stock and frt. paid by F. G. Perkins.
O. K. N. W.

Copy

DEFENDANTS' EXHIBIT PERKINS INVOICE VOUCHER

Poplar Bluff, Mo., August 19, 1905.

Lowell M. Palmer to F. G. Perkins, Agt., Dr.

Address New York

For invoice five attached hereto

April	29th	$92.55	
May	14	111.75	
	25	19.75	
	27	1.95	
June	13	47.37	$273.37

Approved for $273.37
(Signed) Nelson Windsor, Superintendent.
Examined by me and found correct.
(Signed) G.

Poplar Bluff, Mo., —— —, 190-.

Received of Lowell M. Palmer, two hundred and seventy-three and 37/100 dollars, in full for above account.
Please sign and return this voucher to Lowell M. Palmer, Polpar Bluff, Mo.

(Signed) Frank G. Perkins, Agent.

Copy

[fol. 923] DEFENDANTS' EXHIBIT TANK INVOICE

Poplar Bluff, Mo., 4-1-1905.

Mr. L. M. Palmer, City, in Account with Walker-Garetson Mfg. Co., Manufacturers and Dealers in Sash, Doors and Lumber

All Kinds of Mill Work in Hard and Soft Wood to Order

Manufacturers of Store and Office Furniture, Scroll and Turned Work

Jany.	26	To 1 pc. lbr	.20
Mch.	1	" turning cant hook hdls. (69)	11 50
	17	" 2 sash $2.40 (24) 50# tar $1.50	3 90
	28	" 4 pcs. 2 x 6 x 12 .96, 2 x 6 x 16 $1.30	2 26
	31	" 2 tanks 7 x 8'	110 00
			$127 86
Apr.	4	By cash	2 40
			$125 46

Paid Apr. 15, 1905. Walker-Garetson Mfg. Co. Thanks. Copy.

DEFENDANTS' EXHIBIT WALKER EXHIBIT

Extracts from the Books of the Walker-Garetson Mfg. Co.

Journal Entry on Page 6 of the Journal for 1905

March 31, 1905

L. M. Palmer

527

To 2 tanks 8 x 7 ..... 110 00

L. M. Palmer Company

'05

Mch.					
"	31	To 2 tanks 8 x 7'	6		110 00
Apr.	1	" Sawing Adjutators	8		4 00

[fol. 924] DEFENDANTS' EXHIBIT SCHIELD INVOICE No. 1

June 3, 1905.

Mr. Lowell M. Palmer, Poplar Bluff, Mo., to Wm. Schield Mfg. Co., St. Louis, Mo., Dr.

Terms: Net 10 days.

5 bbls. 3020 lbs. "76-98" soda @ $2.75 cwt		$83 05
	May 23 paid on a/c	81 95
611–45		
674–59	Due us	$1 10
638–58	F. O. B. St. Louis,	
704–59	Via I. M.	
674–60		
3301–281	O. K.	

Copy.

DEFENDANTS' EXHIBIT SCHIELD INVOICE No. 1A

Poplar Bluff, Mo., June 13, 1905.

Lowell M. Palmer to Wm. Schield Mfg. Co., Dr.

Address St. Louis, Mo. 6

For invoice one attached hereto.

Solvent $1 10

Approved for $1.10

Examined by me and found correct.
Superintendent. (Signed) G.

Poplar Bluff, Mo., Jun. 14, 1905.

Received of Lowell M. Palmer one and 10/100 dollars in full for above account.

Please sign and return this voucher to Lowell M. Palmer, Poplar Bluff, Mo.

(Signed) Wm. Schield Mfg. Co., Pr. Weber.

Copy.

[fol. 925] DEFENDANTS' EXHIBIT SCHIELD INVOICE No. 2

May 30th, 1907.

Mr. R. M. Parker, Agent, Poplar Bluff, Mo., to Wm. Schield Mfg. Co., St. Louis, Mo., Dr.

Terms: Net 10 days.

2 bbls 1168# "76-98" Soda, at 300 per 100 lbs..... $35 04

635–46
630–51

1265–97 – 1168

Via I. M.

Received O. K. Prices O. K. Extensions O. K. G. H. W.

Copy.

DEFENDANTS' EXHIBIT SCHIELD INVOICE No. 2A

R. M. Parker, Agent, Poplar Bluff, Mo., to Wm. Schield Mfg. Co., St. Louis, Mo., Dr.

As per one invoices attached. June 11, 1907.

May 30 Solvent..... $35 04

Correct.

Geo. H. Windsor, Cashier.

Approved for Payment.
M. E. Horlacher, Superintendent.

Check No. 5916. June 12, 1907.

$35 04

Received from R. M. Parker, Agent, thirty-five and 04/100 dollars in full for above account.
(Signed) Wm. Schield Mfg. Co., Wm. Schield, Prop.

Copy.

[fol. 926] DEFENDANTS' EXHIBIT SCHIELD INVOICE No. 3

June 22nd, 1907.

Mr. R. M. Parker, Agt., Poplar Bluff, Mo., to Wm. Schield Mfg. Co., St. Louis, Mo., Dr.

Terms: Net 10 days.

4 bbls. "76-98" Soda, 2373 at $3.00 per 100 .. $71 19
F. O. B. St. Louis.

672–55
650–57
590–41
670–56

2582–209 – 2373 Duplicate

Received O. K. Prices O. K. Extensions O. K. G. H. W.
Copy.

DEFENDANTS' EXHIBIT SCHIELD INVOICE No. 3A

Mr. R. M. Parker, Agent, Poplar Bluff, Mo., to Wm. Schield & Co., St. Louis, Mo., Dr.

As per one invoices attached. July 3, 1907.

June 22 4 bbls. Soda $71.19
Correct:

Geo. H. Windsor, Cashier

Approved for Payment:
———— Superintendent.

Check No. 5960 Jul. 5, 1907.

$71 19

Received from R. M. Parker, Agent, seventy-one and 19/100 dollars in full for above account.
(Signed) Wm. Schield Mfg. Co.

[fol. 927] DEFENDANTS' EXHIBIT SCHIELD INVOICE No. 4

St. Louis, Mo., July 24th, 1907.

Mr. R. M. Parker, Agent, Poplar Bluff, Mo., to Wm. Schield Mfg. Co., St. Louis, Mo., Dr.

Terms: Net 10 days.

6 bbls. "76-98" Soda, 3343# at $3.25 per 100# $108 65

595–55–540
586–55–531
644–53–591 Via Iron M.
615–56–559
605–52–553
620–51–569

3665–322–3343#

Received O. K. Prices O. K. Extensions O. K. G. H. W.

Copy.

DEFENDANTS' EXHIBIT SCHIELD INVOICE No. 4A

R. M. Parker, Agent, Poplar Bluff, Mo., to Wm. Schield Mfg. Co., St. Louis, Mo., Dr.

As per one invoices attached 7-30-1907.

7—24 6 bbls. soda $108 65

Correct:

Geo. H. Windsor, Cashier.

Approved for Payment:
M. E. Horlacher, Superintendent.

Check No. 6025. Jul. 31, 1907... $108 65

Received from R. M. Parker, Agent, one hundred and eight and 65 /100 dollars in full for above account.
(Signed) Wm. Schield Mfg. Co., Wm. Schield.

[fol. 928] DEFENDANTS' EXHIBIT SCHIELD INVOICE No. 5

St. Louis, Mo., July 31st, 1907.

Mr. R. M. Parker, Agent, Poplar Bluff, Mo., to Wm. Schield Mfg. Co., St. Louis, Mo., Dr.

Terms: Net 10 days.

20 bbls. "76-98" Soda, 11352# at $3.20 per 100# $363 26
Via Iron Mt. Ry. F. O. B. St. Louis.

610–54–556	643–45–598	618–61–557	611–51–560
581–54–527	603–52–551	650–52–598	653–55–598
593–53–540	638–53–585	613–57–556	636–54–582
604–52–552	614–56–558	633–52–581	624–57–567
595–52–543	630–60–570	655–52–603	631–61–570

Received O. K. Prices O. K. Extensions O. K. G. H. W.

Copy.

DEFENDANTS' EXHIBIT SCHIELD INVOICE No. 5A

R. M. Parker, Agent, Poplar Bluff, Mo., to Wm. Schield Mfg. Co., St. Louis, Mo., Dr

As per one invoices attached. 8-14-1907.

7 31 20 bbls. solvent $363 26

Correct:

Geo. H. Windsor, Cashier.

Approved for payment:
M. E. Horlacher, Superintendent.

Check No. 6062 August 16, 1907 ..... $363 26

Received from R. M. Parker, Agent, three hundred and sixty-three and 26/100 dollars in full for above account.
(Signed) Wm. Schield Mfg. Co., Wm. Schield.

[fol. 929] DEFENDANTS' EXHIBIT SCHIELD INVOICE No. 6

St. Louis, Mo., Jan. 6th, 1908.

Mr. R. M. Parker, Agt., Poplar Bluff, Mo., to William Schield Mfg. Co., St. Louis, Mo., Dr.

Terms: Net 10 days.

20 bbls. "76-98" Soda, 11845# at $3.20 F. O. B. St. Louis, $379.04

664-56-608	619-51-568	621-50-571
662-52-610	638-52-586	648-54-594
630-54-576	676-54-622	650-50-600
643-57-586	638-53-585	642-55-587
653-52-601	683-56-627	
680-59-621	630-59-571	
632-49-583	636-54-582	
603-46-557	663-53-610	

Received O. K. Prices O. K. Extensions O. K.
12911-1066-11845# Via Iron M. Ry.
Frt. $39.99.
Copy.

DEFENDANTS' EXHIBIT SCHIELD INVOICE No. 6A

R. M. Parker, Agent, Poplar Bluff, Mo., to Wm. Schield Mfg. Co., St. Louis, Mo., Dr.

As per one invoices attached. 1-17-1908.

Jan. 6 20 bbls. "76-98" soda $379.04

Correct:
Geo. H. Windsor, Cashier
Approved for payment:
M. E. Horlacher, Superintendent.

Check No.——— Jan. 18, 1908. $379.04

Received from R. M. Parker, Agent, three hundred seventy-nine and 04/100 dollars in full for above account.
(signed) Wm. Schield Mfg. Co.
Wm. Schield.

Copy.

[fol. 930] DEFENDANTS' EXHIBIT DAY RUBBER CO. INVOICE

Claims for shortage must be made within five days from receipt of goods.

All accounts subject to draft with exchange without notice at maturity.

Day Rubber Co.,

415-417 North Fourth Street,
Rubber Goods of every description.

Our order No. 01878
Your order No. 5079.

St. Louis, Mo., Apr. 21, 1906.

Sold to Lowell M. Palmer, Poplar Bluff, Mo.
Terms: 2% 10 days; net 60 days Ship to - - via. Ex.

11/12 doz. mens ½ L. gloves		$18.00	$16.50	
1/12 " " " " "	#13	21.00	1.75	
	33⅓%		$18.25	$12.17
				.24
				$11.93

Received O. K. 2%..
Prices O. K.
D. Extensions O. K. ..
We will not be responsible for money collected by or loaned to agents.

Poplar Bluff, Mo., April 27, 1906.

Lowell M. Palmer,

To Day Rubber Co., Dr.

Address St. Louis, Mo.

For invoice one attached hereto:

April 21st. $11.93

Approved for $11.93
Nelson Windsor,
Superintendent.

Examined by me and found correct:
G.

St. Louis, April 30, 1906.

Received of Lowell M. Palmer eleven and 93/100 dollars in full for above account.
Please sign and return this
voucher to Lowell M. Palmer, Poplar Bluff, Mo. (signed) Day Rubber Co.
J. G. Conlon.

[fol. 931] "DEFENDANTS' EXHIBIT BROOKLYN COOPERAGE, INVOICE AND PAPERS, No. 1"

Mr. Lowell M. Palmer, 184 Front St., N. Y. Bought of F. G. Perkins, Agent for Planters' Manufacturing Company, Lake Mary, Fla. [192 Fulton Street]*

January 13th, 1905.

54 bags Perkins's Veneer Glue 15,120 .7	1,058 40	
Less 20c. per 100 lbs. freight to N. Y.	30 24	
		1,028 16
54 bags at .15 (credit given when returned)		8 10
642 3 bbls. No. 3 glue 621 = 2,039 net at .3 776		61 17
		1,097 43

Car A. C. E. 21,180.
Paid Mar. 3, 1905. F. G. Perkins.
O. K. L. M. P.

[*Erased in copy.]

"DEFENDANTS' EXHIBIT BROOKLYN COOPERAGE, INVOICE AND PAPERS, No. 1-A"

Elijah Windsor, Mill Superintendent. Charles Langlotz, Railroad Manager

Mill and Railroad Office of Lowell M. Palmer

Poplar Bluff, Mo., 2-14-, '05.

Lowell M. Palmer, Esq., 184 Front St., New York City.

DEAR SIR: I enclose herewith copy of expense for the 54 bags of starch about which I wrote you on the 4th instant, as per your request of the 10th.

Yours respectfully, Nelson Windsor.

Encl.
C.
F. G. Perkins.
Planters Mfg. Co.

[fol. 932] "DEFENDANTS' EXHIBIT BROOKLYN COOPERAGE, INVOICE AND PAPERS, No. 1-B"

Freight Bill. Ex Bill No. 2189

Poplar Bluff, Mo., Division 17, 1905

Consignee, Lowell M. Palmer.

To St. Louis, Iron Mountain and Southern Ry., Dr. Cairo, Ill.

Date	Number	Car No. and Initial		Consignor
1/22	1187	21546	C. P. & M. L.	J. C.

No. of Packages	Articles & Marks	Weight	Rate	Freight charges	Advance charges
54	Bags Starch	15120	27	4682	11040

C. O. M.
Received payment—L. F. Villon W. Agent.
Total to collect, 15122.

"Defendants' Exhibit Brooklyn Cooperage, Invoice and Papers, No. 2"

Mr. Lowell M. Palmer, 184 Front St., N. Y. Bought of F. G. Perkins, Agent for Planters' Manufacturing Company [192 Fulton Street, New York]*

Lake Mary, Fla., March 11th, 1905.

Terms.

254 bags Perkins' Veneer Glue, 59,760 lbs. 7c.	5,183 20	
Less 20c. per 100 lbs. freight to N. Y.	119 52	
		4,063 68
254 bags at .15		38 10
		4,101 78

Car A. C. L. 15,493.
Duplicate B/L attached.
Items, O. K.
Prices O. K. G. F. Royce. Paid April 11, 1905.
Extension O. K. Planters Mfg. Co.,
Charge Poplar Bluff. By J. B. B. S.
Receipt & Return to 184 Front St., N. Y.

[fol. 933] "Defendants' Exhibit Brooklyn Cooperage, Invoice and Papers, No. 2-A"

New York, March 11, 1905.

Planters Mfg. Co., Sold to the Brooklyn Cooperage Co., Manufacturers of Flour, Sugar, Fruit, Oil & Syrup, Barrels, also Molasses, Rum, Wine & Alcohol Shooks, for Export, Office 184 Front St., Cor. Burling Slip

#15493—254 bags Perkins Veneer Glue 59,760 lbs. at 7c	4183.20
A. C. L. less 20c per 100 lbs. freight to N. Y.	119.52
	4063.68
254 bags at 15c	38.10
	$4101.78

[*Erased in copy.]

Items O. K.
Prices O. K. G. F. Royce
Extensions O. K.
Charge Poplar Bluff Paid April 7th, 1905.

"Defendants' Exhibit Brooklyn Cooperage, Invoice and Papers, No. 2-B"

Elijah Windsor, Factory Superintendent. Charles Langlotz, Railroad Manager

Factory and Railroad Office of Lowell M. Palmer

Poplar Bluff, Mo., 3-30-05.

Lowell M. Palmer, Esq., 184 Front St., New York City.

Dear Sir: Car A. C. L. 15493 containing Perkins' veneer glue has arrived and has been unloaded, and contents check according to the copy invoice made in your office March 11th. I return herewith the copy referred to.

Yours respectfully, Nelson Windsor.

Encl. C.

[fol. 934] "Defendants' Exhibit Brooklyn Cooperage, Invoice and Papers, No. 2-C"

Freight Bill, Ex. Bill No. 1466.

Bu Station Division B123, 1905.

Consignee L. M. Palmer

To St. Louis, Iron Mountain & Southern Ry., dr., Cairo, Ill.

Date	Number	Car No. and initial	Consignor	Original point of shipment.
3/22	1447	15493 A. P. L.	J. C.	Lake Mary

No. of packages	Articles & Marks	weight	rate	charges	advance charges
254	Sx Flour	59760	21 27 / 9	53.78	286.85

O. K.

Received payment L. F. Villon W Agent

Total to collect 340.63

"Defendants' Exhibit Brooklyn Cooperage, Invoice and Papers, No. 3"

Elijah Windsor, Factory Superintendent. Charles Langlotz, Railroad Manager

Factory and Railroad Office of Lowell M. Palmer

Poplar Bluff, Mo., 4-21, '05.

Lowell M. Palmer, Esq., 184 Front St., New York City.

Dear Sir: Enclosed please find invoice and receipted expense bill for car S. A. L. 15385, which was unloaded on the 20th instant, and which contained Perkins' new glue; the contents of this car checked correctly.

Yours respectfully, Nelson Windsor.

Beyham Pay attached bill LMP.
Paid Apr. 24, 1905.

[fol. 935] "Defendants' Exhibit Brooklyn Cooperage, Invoice and Papers, No. 3-a"

Mr. Lowell M. Palmer, 184 Front St., New York, Bought of F. G. Perkins, Agent for Planters' Manufacturing Company [192 Fulton Street, New York],* Lake Mary, Fla.

March 28th, 1905.

125 bags Perkins's Veneer Glue, 30,200 lbs. at 7.20 f. o. b. Cairo	2,174.40
125 bags at 15c	18.75
	2,193.15
Car S A L 15,358 less f. o. b. to Cairo	217.44
	1,975.71

Paid Apr. 26, 1905. Receipt and return to 184 Front St., N. Y.
Items O. K.

[*Erased in copy.]

Prices O. K.
Extension O. K. G. F. Royce
Charge Poplar Bluff
Received payment April 26, 1905. F. G. Perkins, Agent, by Catherwood.
With our thanks.

[fol. 936] "DEFENDANTS' EXHIBIT BROOKLYN COOPERAGE INVOICE AND PAPERS, No. 4"

Mr. Lowell M. Palmer, 184 Front Street, New York, Bought of F. G. Perkins, Agent for Planters' Manufacturing Company, 192 Fulton Street, New York, April 4th, 1905

Mail Check Lake Mary, Fla.

140 bags Perkins Veneer Glue, 30,100 pounds f. o. b. Cairo 7.20	2,167.20	
140 bags at 15c	21 00	2,188 20
Less f. o. b. to Cairo, Ill.		138.46
Paid May 1, 1905		2,049.74

M.P. 22,736 shipped from Jacksonville, B/L Enc.
Receipt & Return to 184 Front St., N. Y.
May 1, 1905.
Items, O. K.
Prices, O. K.
Extensions O. K. G. F. Royce
Charge Poplar Bluff with our thanks.
Received payment May 5th, 1905. F. G. Perkins, Agent, by T. B. Cotherwood.

[fol. 937] "DEFENDANTS' EXHIBIT BROOKLYN COOPERAGE, INVOICE AND PAPERS, No. 4-A"

Elijah Windsor, Factory Superintendent. Charles Langlotz, Railroad Manager

Factory and Railroad Office of Lowell M. Palmer, Poplar Bluff, Mo.

4-27, '05.

Lowell M. Palmer, Esq., 184 Front St., New York City.

DEAR SIR: I enclose herewith invoice and receipted expense bill for the Perkins glue stock contained in car No. P. 22736. The contents of the car checked alright with the invoice.

Yours respectfully, Nelson Windsor.

Encl. C.

This glue is still being billed or classified as starch.

[fol. 938] "DEFENDANTS' EXHIBIT BROOKLYN COOPERAGE INVOICE AND PAPERS No. 5"

Lake Mary, Fla., June 16, 1905.

Mr. Lowell M. Palmer, 184 Front Street, New York, Bought of F. G. Perkins, Agent

172 bags Perkins's Veneer Glue, Car C. C. C. & St. L. 12,207	39,840 lbs.	
108 bags Perkins's Veneer Glue, Car L. & N. 91,293	30,240 lbs.	
	70,080 lbs.	
at 7.20 f. o. b. Cairo		$5,045.76
280 bags at 15 cts		42.00
		$5,087.76
Less frt. to Cairo	175 39	
	183.26	
	183 26	358 65
		$4,729 11
		358 65

Bills Lading Enclosed.
Items O. K. Nelson Windsor.
Prices O. K. C. F. Royce.
Extensions O. K.
Charge Poplar Bluff.
Paid July 10, 1905.
Receipt and return to 184 Front Street New York.
Received payment with thanks. F. G. Perkins, Agent, by Catherwood.

[fol. 939] "Defendants' Exhibit Brooklyn Cooperage, Invoice and Papers, No. 6"

Mr. Lowell M. Palmer, Esq., 184 Front Street, New York,
Bought of F. G. Perkins, Agent for Planters Manufacturing Company, 192 Fulton Street, New York.

July 6, 1905.

61960# Perkins' Veneer Glue 7 1/5c		4461.12	
285 bags each	15c	42.75	
			$4503 87
Less freight to Cairo			371.76
			$4132 11

Car No. S. P. 83689
Items O. K. Nelson Windsor.
Prices, O. K. G. F. Royce.
Extensions O. K. O. K. L. M. P. Rush.
Charge Poplar Bluff.
Paid August 7, 1905.
Receipt & return to 184 Front St., N. Y.
Received payment Aug. 9, '05. Frank G. Perkins, Agent.

"Defendants' Exhibit Brooklyn Cooperage, Invoice and Papers No. 6-A"

Remit to Perkins, 121 E. 51st Street, Chicago, Ill.

Paid Aug. 7th, 1905.

[fol. 940] "Defendants, Exhibit Brooklyn Cooperage, Invoice and Papers No. 7"

Mr. Lowell M. Palmer, Esq., 184 Front Street, New York,
Bought of F. G. Perkins, Agent for Planters' Manufacturing Company, 192 Fulton Street, New York.

August 5th, 1905.

305 bags Perkins Veneer Glue 64720# at 7.2c per lb.	4659.84	
305 bags at 15c each	45.75	
	4705.59	
Less freight to Cairo 30c per 100	232.99	
		4472.60
Less amount statement attached		755.24
		3717.36

Car N. Y. C.—91591.
Items O. K.
Prices O. K. G. F. Royce.
Extensions O. K.
Charge Poplar Bluff.
B. L. & Memo. sent 8/14/05.
Paid August 21, 1905. Receipt and return to 185 Front Street, N. Y.
Received payment. F. G. Perkins, Agent.

[fol. 941] "Defendants' Exhibit Brooklyn Cooperage, Invoice and Papers, No. 7-A"

Statement

G. L. Folio —. P. L. Folio —

F. G. Perkins in Account with the Brooklyn Cooperage Company, Manufacturers of Flour, Sugar, Fruit, Oil and Syrup Barrels, Also Molasses, Rum, Wine and Alcohol Shooks for Export, 184 Front St., Cor. Burling Slip, New York.

August 21, 1905.

To following lots of glue shipped from Poplar Bluff to Cairo, Ill.:

May	15, 1280 lbs.	6	bags.
"	19, 5600 "	20	"
June	10, 3250 "	15	"
	10,130 " at 7.2c f. o. b. Cairo		
	add frt. to P. B. at 18c	18	
		.0738	747.59
	41 bags at .15		6.15
	Cartage		1.50
			755.24

[fol. 942] "Defendants' Exhibit Brooklyn Cooperage, Invoice and Papers No. 8"

R. M. Parker, Agent, Poplar Bluff, Mo., to F. G. Perkins, Manufacturer of Special Glues, South Bend, Ind., Dr.

Please remit to 211 N. Lafayette St.

June 4th, 1907.

430 Bags Veneer Glue 59,270# at 7.35c per lb.	4356.34	
430 bags 10c.	43.	
		$4399.34
Less freight		334.73
		4064.61

P. M. #6475.
Items O. K.
Prices O. K. P. Handle.
Extensions O. K.
Charge Poplar Bluff.
Paid 23, July 1907.
Receipt & return to 117 Wall St., N. Y. City
Received Payment. F. G. Perkins.

[fol. 943] "Defendants' Exhibit Brooklyn Cooperage, Invoice and Papers No. 8-A"

R. M. Parker, Agent, Poplar Bluff, Mo., to F. G. Perkins, Manufacturer of Special Glues, Dr.

Please remit to 211 N. Lafayette St., South Bend, Indiana.

July 15th, 1907.

(Supplemental to our invoice June 4th, 1907)

To 13 bags Veneer glue—1,300 lbs. at 7.35c.	$95 55
" 13 bags—at 10c.	1 30
	$96 85

Items O. K.
Prices O. K. P. handle.
Extensions O. K.
Charge Poplar Bluff.
Paid July 23rd, 1907.
Receipt & return to 117 Wall St. N. Y. City.
Received Payment. F. G. Perkins.

"Defendants' Exhibit Brooklyn Cooperage, Invoice and Papers No. 9"

R. M. Parker, Agent, 117 Wall St., N. Y., to F. G. Perkins, Dr.

September 27th, 1907.

Part of your order August 12th, 1907:

To 357 bags Light Body Veneer Glue 34,516 lbs. at 7.35 c.	$2,536 93	
To 357 bags at 10c.	35 70	
		$2,572 63
Less frt.		100 00
		$2,472 63

(Mo. Pacific Car #15411.)
(Balance of order on road.)
Paid Nov. 4, 1907 10/25/07 L.
Receipt & return to 117 Wall St., N. Y. City. C. Langlotz.

[fol. 944] "Defendants' Exhibit Brooklyn Cooperage, Invoice and Papers No. 9-A"

R. M. Parker, Agent, 117 Wall Street, New York, to F. G. Perkins, Dr.

September 27, 1907.

Part of your order August 12th, 1907:

To 357 bags Light Body Veneer Glue 34,516 lbs. at 7.35c.	$2,536 93	
To 357 bags at 10c.	35 70	
		$2,572 63

(Mo. Pacific Car #15411.)
(Balance of order on road.)
Duplicate.

"Defendants' Exhibit Brooklyn Cooperage, Invoice and Papers No. 9-B"

R. M. Parker, Agent, 117 Wall Street, N. Y., to F. G. Perkins, Manufacturer of Special Glues, Dr.

Please remit to 211 N. La Fayette St., South Bend, Indiana.

September 27th, 1907.

Part of your order August 12th, 1907:

To 357 bags Light Body Veneer Glue 34,516 lbs.	
at 7½c.	$2,588 70
To 357 bags, at 10c.	35 70
	$2,624 40

(Mo. Pacific Car #15411.)
(Balance of order on road.)
Received O. K. Charles Langlotz.
Prices O. K.
Extensions O. K..

[fol. 945] "Defendants' Exhibit Brooklyn Cooperage, Invoice and Papers No. 9-C"

Frank G. Perkins, Manufacturer, Special Veneer & Furniture Glues

Please address reply to Lake Mary, Fla.

R. M. Parker, Esq. Agent, 117 Wall Street, N. Y.

Dear Sir: Enclosed please find corrected invoice, per your letter of Oct. 14th, which was forwarded to me here. Thank you for calling my attention to the matter.

I expect to be here for a time and I will ask you to make the remittance to me at this point.

Yours very truly, F. G. Perkins.

FGP.-S.G.
Two enclosures.

"Defendants' Exhibit Brooklyn Cooperage, Invoice and Papers No. 10"

R. M. Parker, Agent, 117 Wall Street, N. Y., to F. G. Perkins, Dr.

Oct. 18th, 1907.

Please remit to 211 N. La Fayette St., South Bend, Indiana.

To 219 Bags Glue 54,750 lbs. at 7.35c	$4024 13	
To 219 bags at 10c	21 90	
		$4046 03
Less for 406 lbs. short at .0735 =	29 84	
Freight	283 71	
		313 55
		$3732 48

Shipped from Lake Mary, Fla. A. C. L. Car #30737.
Received payment Nov. 26, 1907.
Paid Nov. 25th, 1907.
Receipt & return to 117 Wall St., N. Y. C.

F. G. Perkins.

[fol. 946] "Defendants' Exhibit Brooklyn Cooperage, Invoice and Papers No. 10-A"

R. M. Parker, Agent, 117 Wall Street, N. Y., to F. G. Perkins, Dr.

Oct. 18th, 1907.

Please remit to 211 N. Lafayette St., South Bend, Indiana.

To 219 Bags Glue 54,750 at 7.35	$4024 13	
To 219 Bags at 10c	21 90	
		$4046 03
Less 406 lbs. short	29 84	
" freight	283 71	
		313 55
		$3732 48

Paid Nov. 25, 1907.
Shipped from Lake Mary, Fla. A. C. L. Car #30737.

Copy Chas. Langlotz.

[fol. 947] "DEFENDANTS' EXHIBIT BROOKLYN COOPERAGE, INVOICE AND PAPERS NO. 10-B"

Office of R. M. Parker, Agent, Poplar Bluff, Mo.

11-19-07.

R. M. Parker, Agent, 117 Wall Street, New York City.

DEAR SIR: We have received from F. G. Perkins in car A. C. L. 30737, 219 bags of Cassava glue, as follows:

Gross-weight	54563 lbs.
Tare (219 bags)	219 "
Net	54344 "

The net weight, you will notice is 406 pounds less than is called for in the invoice, which we return herewith to you.

We have very carefully weighed all this glue, and feel very sure that our weight is correct.

We have paid the freight on this glue, which amounted to $283.71 paid freight bill for which we enclose herewith.

Yours respectfully, Charles Langlotz.

2 Encl.
P. H.

[fol. 948] "DEFENDANTS' EXHIBIT BROOKLYN COOPERAGE, INVOICE AND PAPERS NO. 11"

R. M. Parker, Agent, 117 Wall Street, N. Y., to F. G. Perkins, Manufacturer of Special Glues, Dr.

Please remit to 211 N. La Fayette St., South Bend, Indiana.

November 29, 1907.

(Your order November 4th, 1907:)		
To 148 bags glue 40,755 lbs. at 7.35c	$2995 49	
To 148 bags at 10c	14 80	
		$3010 29
Less freight		179 30
		$2,830 99

Shipped in L. S. & M. S. Car #44049.
Received O. K. Charles Langlotz.
Prices O. K.
Extensions O. K.
E. pay 2902.79.
Paid Jan. 4, 1908. F. G. Perkins. S.

[fol. 949] "Defendants' Exhibit Brooklyn Cooperage Invoice and Papers No. 11-A"

R. M. Parker, Agent, 117 Wall Street, New York, to F. G. Perkins, Manufacturer of Special Glues, Dr.

Please remit to 211 N. La Fayette St., South Bend, Indiana.

December 12, 1907.

To 10 Bags Glue 1,000 lbs. at 7.35c per lb..	$73.00	
To 10 Bags at 10c	1.00	
		$74.50
Less freight		2.70
		$71.80

Received O. K. C. L.
Prices O. K. C. L.
Extensions O. K.
Items O. K.
Prices O. K.
Extensions O. K. Handle.
Charge Poplar Bluff.
Receipt & Return to 117 Wall St. N. Y. City.
Paid January 4, 1908. F. G. Perkins.
E. pay of 2902.79.

[fol. 950] "Defendants' Exhibit Brooklyn Cooperage Invoice and Papers No. 11-B

Office of R. M. Parker, Agent, Poplar Bluff, Mo.

12-18-07.

R. M. Parker, Agent, 117 Wall Street, New York City.

Dear Sir: Enclosed herewith please find invoice 148 bags glue received from F. G. Perkins which amounts to $3,010.29, also the freight bill on this glue which we have paid here, and which amounts to $179.30. This car glue checked O. K. as to weight.

Yours respectfully, Charles Langlotz.

Paid Jan. 4, 1908.
Encl.

[fol. 951] "Defendants' Exhibit Brooklyn Cooperage Invoice and Papers No 11-C"

Office of R. M. Parker, Agent, Poplar Bluff, Mo.

12-26-07.

R. M. Parker, Agent, 117 Wall Street, New York City.

Dear Sir: Enclosed herewith please find invoice in duplicate for ten bags glue, which was shipped by F. G. Perkins to us from Cairo, to tide us over an emergency, owing to a delay in receiving the last carload of glue, same having been delayed considerably in transit, and Mr. Perkins being in Poplar Bluff at the time, wired the Singer Co. at Cairo and had them ship this glue to us, in order to enable us to keep up our output, until the above mentioned car arrived. Also enclose paid freight bill, amounting to $2.70 which we paid here.

I make this explanation because this small shipment by local freight was not ordered by the New York office in the usual manner.

Yours respectfully, Charles Langlotz.

Encl.

P. S.—The above mentioned local shipment of glue was heavy body.

Paid Jan. 4/08.

[fol. 952] "DEFENDANTS' EXHIBIT BROOKLYN COOPERAGE INVOICE AND PAPERS No. 12"

R. M. Parker, Agent, 117 Wall Street, N. Y., to F. G. Perkins, Manufacturer of Special Glues, Dr.

Please remit to 211 N. Lafayette St., South Bend, Indiana.

January 2, 1908.

(Your order December 17, 1908:)

To 347 bags glue 60,050 lbs. at 7.35c	$4,413.68	
To 347 bags at 10c	34.70	
		$4,448.38
Less 183 lbs. 7.35	13.45	
Freight	330.28	
		343.73
		$4,104.73

E.

Shipped to Poplar Bluff, Mo.
Car, Wabash 62712.
January 2, 1908.
Paid Feb. 5, 1908. Receipt & Return to 117 Wall St., N. Y. City.
Paid Feb. 9, 1908. F. G. Perkins, G. S. P.

"DEFENDANTS' EXHIBIT BROOKLYN COOPERAGE INVOICE AND PAPERS No. 12-A"

Office of R. M. Parker, Agent, Poplar Bluff, Mo

1-21-08.

R. M. Parker, Agent, 117 Wall Street, New York City.

DEAR SIR: I return herewith invoice from F. G. Perkins for 347 bags of glue contained in car Wabash 62,712, which glue weighed 59,867, lbs., which is 183 lbs. less than the invoice calls for.

Also enclosed paid freight bill on this car of glue amounting to $330.28, which has been paid by this office.

Your respectfully, Charles Langlotz.

Encl.
Paid Feb. 5, 1908.

[fol. 953] "DEFENDANTS' EXHIBIT BROOKLYN COOPERAGE INVOICE AND PAPERS, No. 12-B"

(Duplicate)

R. M. Parker, Agent, 117 Wall St., New York, to F. G. Perkins, Manufacturer of Special Glues, Dr.

Please remit to 211 N. La Fayette St., South Bend, Indiana.

January 2, 1908.

(Your order December 17, 1908:)

To 347 bags glue 60,050 lbs. at 7 35	$4,413.68	
To 347 bags at 10c	34.70	
		$4,448.38
Less 183 lbs. at 7.35c	13.45	
" freight	330.28	
		343.73
		$4,104.65

Shipped to Poplar Bluff, Mo.
Car, Wabash 62,712.
January 2, 1908.
Paid Feb. 5, 1908.

[fol. 954] "DEFENDANTS' EXHIBIT BROOKLYN COOPERAGE INVOICE AND PAPERS No. 13"

R. M. Parker, Agent, 117 Wall Street, New York, to F. G. Perkins, Manufacturer of Special Glues, Dr.

Please remit to 211 N. La Fayette St., South Bend, Indiana.

March 25, 1908.

(Your order February 24, 1908:)

To one car veneer glue:

20,000 lbs. H. B. Glue		
40,000 " L. B. " 724 lbs. short		
[60,000]* " "	4,356.79	
59,276 " at 7.35c	[$4410.00]*	
To 300 Bags at 10c	30.00	
		[$4440.00]*

[*Erased in copy.]

Actual gross weight 59,276 lbs	4,386.79
Less freight	330.00
	$4,056.79

In Duplicate per your request 10/14/07
Paid April 17, 1908.
Dup. to P. T. C. 3/26/07.
Items O. K.
Prices O. K. H. C. Smith.
Extensions O. K.
Charge Poplar Bluff, Mo.
Paid Apr. 22, 1908. F. G. P.

[fol. 955] "DEFENDANTS' EXHIBIT BROOKLYN COOPERAGE INVOICE AND PAPERS No. 13-A"

R. M. Parker, Agent, 117 Wall Street, New York, to F. G. Perkins, Manufacturer of Special Glues, Dr.

Please remit to 211 N. La Fayette St., South Bend, Indiana.

March 25th, 1908.

(Your Order February 24, 1908:)

To one car veneer glue:

20,000 lbs. H. B. Glue		
40,000 " L. B. "		
60,000 " " at 7.35c	$4,410.00	
To 300 Bags at 10c	30.00	
		$4,440.00

In Duplicate per your request 10/14/07.
Received O. K.
Prices O. K.
Extensions O. K.
Paid April 17, 1908.

[fol. 956] "Defendants' Exhibit Brooklyn Cooperage Invoice and Papers No. 13-B"

Office of R. M. Parker, Agent, Poplar Bluff, Mo.

4-11-08.

R. M. Parker, Esq., New York, N. Y.

Dear Sir: The car of Cassava glue referred to in the enclosed bill has been received.

While the number of bags in the car corresponds with the number invoiced, the gross weight ascertained by careful weighing on our scales, is 59,276 instead of 60,000 lbs., according to the invoice.

Yours very truly, W. N. Barron, Manager.

Encl.
Paid April 17, 1908.

[fol. 957] "Defendants' Exhibit Brooklyn Cooperage Invoice Papers No. 14"

R. M. Parker, Agent, 117 Wall Street, N. Y., to F. G. Perkins, Manufacturer of Special Glues, Dr.

#512

Please remit to 211 N. LaFayette St., South Bend, Indiana.

April 25th, 1908.

(Your order April 14th, 1908:)

To 300 Bags Veneer Glue 60,000 lbs. at 7.35¢	$4410 00	
To 300 Bags at 10¢	30 00	
		$4440 00
Order filled ¼ H. ¾ L. 295 lbs.		21 68
		$4461 68
Freight		331 30
		$4130 38

Paid May 15, 1908.
From Lake Mary Factory 4/25/08.
Car A. C. L. #27489.
B/L to Poplar Bluff, Mo.
Paid May 18, 1908. F. G. Perkins.
Received O. K. W. N. B.
Prices O. K.
Extensions O. K.

[fol. 958] "Defendants' Exhibit Brooklyn Cooperage Invoice and Papers No. 14-A"

R. M. Parker, Agent, 117 Wall Street, N. Y., to F. G. Perkins, Manufacturer of Special Glues, Dr.

Please remit to 211 N. LaFayette St., South Bend, Indiana.

April 25th, 1908.

(Your order April 14th, 1908:)

Dup. sent Mr. Barron, Mgr., 4/30/08.

To 300 Bags Veneer Glue 60,000 lbs. at 7.35¢	$4410 00	
To 300 Bags at 10¢	30 00	
		$4440 00
Order filled ¼ H. ¾ L. Less Freight		331 30
		$4108 70
From Lake Mary Factory 4/25/08 Add 295 lbs at 7.35		21 68
		$4130 38

Items O. K.
Prices O. K. H. C. Smith.
Extensions O. K.
Charge Poplar Bluff, Mo.
Car A. C. L. #27489.
B/L to Poplar Bluff, Mo.
Paid May 15th, 1908.

[fol. 959] "Defendants' Exhibit Brooklyn Cooperage Invoice and Papers No. 15"

R. M. Parker, Agent, 117 Wall Street, New York, F. G. Perkins, Manufacturer of Special Glues, =1 Gramercy Park, N. Y. City, Dr.

Please remit to 211 N. LaFayette St., South Bend, Indiana.

June 13, 1908.

429 Bags Veneer Glue 70,531 lbs. at 7.35¢	$5,184 03	
429 Bage at 10¢	42 90	
		$5,226 93
Less freight		196 51
		$5,030 42
Less 25 lbs. short at 7.35¢		1 84
		$5,028 58

Packed 1/3 Heavy Body Glue.
2/3 Light " "
Items, O. K.
Prices O. K. H. C. Smith.
Extensions O. K.
Charge Poplar Bluff.
Paid July 13, 1908.
Paid July 15, 1908. F. G. Perkins.

[fol. 960] "Defendants' Exhibit Brooklyn Cooperage Invoice and Papers No. 15-A"

R. M. Parker, Agent, 117 Wall Street, N. Y., to F. G. Perkins, Manufacturer of Special Glues, Dr.

Please remit to 211 N. LaFayette St., South Bend, Indiana.

June 13th, 1908.

429 Bags Veneer Glue 70,531 lbs. at 7.35¢	$5,184 03	
429 Bags at 10¢	42 90	
		$5,226 93
70506 lbs. at 7.35		5,182 19

Packed 1/3 Heavy Body Glue Bags	42 90
2/3 Light " "	5,225 09
Less freight	196 51
	$5,028 58

70531
70506

25 short.

Received O. K.
Prices O. K.
Extensions O. K.
Paid July 13, 1908.

[fol. 961] "DEFENDANTS' EXHIBIT BROOKLYN COOPERAGE INVOICE AND PAPERS No. 15-B"

The Brooklyn Cooperage Company, Manufacturers of Flour, Sugar, Fruit, Oil & Syrup Barrels; Also Molasses, Rum, Wine, and Alcohol Shooks for Export, 117 Wall St. Cor. South St., New York

Dealers in Staves, Heading, Hoops, Second-hand Molasses Hhds., and Cooperage Material Generally

R. M. Parker, President; C. R. Heike, Secretary; Arthur Donner, Treasurer

Cable Address: Engeldon, N. Y.

July 2nd, 1908.

Mr. W. N. Barron, Mgr., Poplar Bluff, Mo.

DEAR SIR: Referring to your favor of the 29th ult., advising outturn in weight of car of glue from Perkins, kindly advise us the amount of freight paid on this car as requested in our letter to you of June 17th, as this is necessary for us to know, before we pay Perkins' bill.

Yours truly, H. C. Smith.

Freight $196.51.

"Defendants' Exhibit Brooklyn Cooperage Invoice and Papers No. 15-C"

July 2nd, 1908.

Mr. W. N. Barron, Mgr., Poplar Bluff, Mo.

Dear Sir: Referring to your favor of the 29th ult., advising outturn in weight of car of glue from Perkins, kindly advise us the amount of freight paid on this car as requested in our letter to you of June 17th, as this is necessary for us to know, before we pay Perkins' bill.

Yours truly, —— ——.

[fol. 962] "Defendants' Exhibit Brooklyn Cooperage Invoice and Papers No. 15-D"

June 17th, 1908.

Mr. W. N. Barron, G. M., Poplar Bluff, Mo.

Dear Sir: We enclose duplicate bill from G. H. Perkins for carload of glue. We think it advisable that you trace this car from your end, to avoid any delay, altho we have assurances from Mr. Perkins that the usual tracers have been placed on the car.

Kindly advise upon arrival the out-turn of weight and freight paid and oblige,

Yours truly, —— ——.

"Defendants' Exhibit Brooklyn Cooperage Invoice and Papers No. 16"

R. M. Parker, Agent, 117 Wall Street, New York, to F. G. Perkins, Manufacturer of Special Glues, Dr.

Please remit to 211 N. La Fayette St., South Bend, Indiana.

7/27/1908.

To 1 Car veneer Glue 330 Bags 60,000 lbs. at 7.35	$4,410 00	
330 Bags at 10c.	33 00	
		$4,443 00
Less freight		330 00
		$4,113 00

From Factory 7/27/08.
Car A. C. L. #25763. Paid Aug. 18, 1908.
B/L to Poplar Bluff, Mo.
Items, O. K.
Prices O. K. H. C. Smith.
Extensions O. K.
Charge Poplar Bluff, Mo.
Receipt and Return to 117 Wall St., N. Y. City.
Paid Aug. 21, 1908. F. G. Perkins.

[fol. 963] "Defendants' Exhibit Brooklyn Cooperage Invoice and Papers No. 16-A"

R. M. Parker, Agent, 117 Wall Street, N. Y., to F. G. Perkins, Manufacturer of Special Glues, Dr.

Please remit to 211 N. La Fayette St., South Bend, Indiana.

7/27/08.

To 1 Car Veneer Glue:

330 Bags, 60,000 lbs. at 7.35c	$4410 00	
330 Bags at 10c	33 00	
		$4443 00

Duplicate.
From Factory 7/27/08.
Car A. C. L. #25763.
B/L to Poplar Bluff, Mo.
Paid Aug. 18, 1908.
Paid Aug. 21, 1908. F. G. Perkins.
32938 L.
27062 H.

[fol. 964] "DEFENDANTS' EXHIBIT BROOKLYN COOPERAGE INVOICE AND PAPERS No. 17"

Mr. R. M. Parker, Agent, Poplar Bluff, Mo., to F. G. Perkins, Manufacturer of Special Glues, Dr.

Please remit to 211 N. La Fayette St., South Bend, Indiana.

November 13, 1908.

Your order October 27th, File 288:		
300 Bags Glue 60,000 lbs. at 7.35	$4,410 00	
300 Bags at 10c	30 00	
		$4,440 00
Less Freight		330 00
		$4,110 00

Out from Factory Nov. 11, '08.
Car A. C. L. 25334.
B/L Attached.
Received O. K. P. Handle.
Prices O. K. D. T. Poole.
Extensions O. K. D. T. Poole.
Department Veneer.
Paid Dec. 7, 1908.
Receipt and return to 117 Wall St., N. Y. City.
Paid Dec. 12, 1908. F. G. Perkins.

[fol. 965] "DEFENDANTS' EXHIBIT BROOKLYN COOPERAGE INVOICE AND PAPERS No. 18"

Mr. R. M. Parker, Agent, 117 Wall Street, N. Y., to F. G. Perkins, Manufacturer of Special Glues, Dr.

Please remit to 211 N. La Fayette St., South Bend, Indiana.

January 2, 1909.

600 Bags Veneer Glue 59092	4343 26	
[60,000]* lbs. at 7.35c	[$4410 00]*	
600 Bags at 10c	60 00	
		$4403 26
		[4470 00]*
Less freight		84 00
		$4319 26

[*Erased in copy.]

Shipped from St. Louis 1/2/09.
In Penn. Car #536428.
Paid Jan. 21, 1909.

12,297 lbs. (gross) heavy.
49,727 " " light.

60,024 "
Less tare 932 "

59,082 at 7.35

Paid Jan. 22, 1908. F. G. Perkins.
Dup. sent Poplar Bluff 1/11/09.
Items O. K.
Prices O. K.
Extensions O. K.
Charge Poplar Bluff, Mo.

[fol. 966] "DEFENDANTS' EXHIBIT BROOKLYN COOPERAGE INVOICE AND PAPERS NO. 18-A"

R. M. Parker, Agent, 117 Wall Street, N. Y., to F. G. Perkins, Manufacturer of Special Glues, Dr.

Please remit to 211 N. La Fayette St., South Bend, Indiana.

January 2nd, 1909.

600 Bags Veneer Glue 60000 lbs. at 7.35c $4410 00
600 Bags at 10c 60 00

$4470 00

Shipped from St. Louis 1/2/09.
In Penn. Car #536428.
Received O. K.
Prices O. K.
Extensions O. K.
Department.
Paid Jan. 21, 1909.
Duplicate.
C49727
H10297

60024

"Defendants' Exhibit Brooklyn Cooperage Invoice and Papers No. 19"

4/29/09.

Dear Smith: Enclosed find F. G. Perkins' bill for glue which has been received O. K. As we only pay our freight bills twice a month, the freight on this shipment $342.65 has not as yet been paid and have been holding the bill up for that reason.

H. C. S.

If the goods called for on this invoice have been received, check the bill and return to New York Office for payment.

Brooklyn Cooperage Company

P. H.—Please check the bill for last car of glue, advising freight paid and return at once. H. C. S.

[fol. 967] "Defendants' Exhibit Brooklyn Cooperage Invoice and Papers No. 19-A"

Frank G. Perkins, Manufacturer of Special Glues, Sold to Messrs. R. M. Parker, Agt., 117 Wall St., New York City
Our order No. 547.
Shipped to Poplar Bluff Mo. South Bend, Indiana, 4/2/09
Date of shipment 3/29/09.
Duplicate.
300 Bags Glue:
Gross weight 62,119 lbs.
Take 3# to bag 90 "

61,219	" net at $7.35 per 100 lb.	4,499.60
300 Bags at 10c		30.00
		4,529.60
Less freight		342.65
		4,186.95

A. C. L. Car 27,897.
B/L mailed to Poplar Bluff.
100 Bags marked Heavy.
200 Bags marked light.
Car contained 19,980 lbs heavy
41,239 " light

61,219

Paid May 4, 1909.

[fol. 968] "Defendants' Exhibit Brooklyn Cooperage Invoice and Papers No. 19-B"

Frank G. Perkins, Manufacturer Special Veneer & Furniture glues, Dean Building, South Bend Indiana

Water-proof Glue, Heat-proof Glue

May 3rd. 1909.

Mr. R. M. Parker, Agent, 117 Wall Street, New York, N. Y.

Dear Sir: If not asking too much we would consider it a great favor if you would send us check for your last shipment. We need it to meet some heavy payments which are shortly due, and if you can see your way clear to favor us it will be greatly appreciated.

Yours very truly, Frank G. Perkins per C. W. Rand.

CWR—GB.

HCS. What's the frt.?

[fol. 969] Defendants' Exhibit Brooklyn Cooperage Invoice and Papers No. 20"

Frank G. Perkins, Manufacturer of Special Glues Sold to R. M. Parker, Agt., 177 Wall Street, New York City

Our order No. 572.
Via Freight.
Shipped to Poplar Bluff, Mo., South Bend, Indiana.

Aug. 30, 1909.

Date of shipment Aug. 27, 1909.

Aug. 27 300 Bags of Glue, Gross 61,275 lbs.		
Tare 3 lb. to bag	900 "	
Net	60,375 lbs. at 7.35	$4,437.56
300 Bags at 10c		30.00
		$4,467.56
Less freight		402.
		$4,065.56

Duplicate B/L to Poplar Bluff Mo. Receipt and return to Out from factory 8/27/09; Car A. C. L. 117 Wall St. N. Y. City.
=26320 100 Bags marked "H" 200 Bags marked "L".
Received payment Sept. 14/09. F. G. Perkins. per W. R.
Dup. sent to W. N. B. Sept. 2/09.
Terms, O. K.
Prices O. K. H. C. Smith.
Extensions O. K.
Charge Poplar Bluff.

[fol. 970] "Defendants' Exhibit Brooklyn Cooperage Invoice and Papers No. 20-A"

Frank G. Perkins, Manufacturer of Special Glues Sold to R. M. Parker, Agt., 117 Wall Street, New York City

Our Order No. 572.
Via Freight.
Shipped to Poplar Bluff, Mo., South Bend, Indiana, Aug. 30, 1909.
Date of Shipment Aug. 27, 1909.

Aug. 27—300 Bags of glue		
Gross	61,275 lbs.	
Tare 3 lb. to bag.	900 "	
Net	60,375 " at 7.35	$4,437.56
300 Bags at 10c		30.00
		$4,467.56

Duplicate B/L to Poplar Bluff, Mo.
Out from Factory 8/27/09 Car A. C. L. #26320.
100 Bags marked "H" 200 Bags marked "L."

Duplicate
Received O. K. G. H.W.
Paid Sep. 13, 1909. Prices O. K.
Extensions O. K.
20,012 lbs. heavy Department
40,363 " light

Frt. $402.00

[fol. 971] "Defendants' Exhibit Brooklyn Cooperage, Invoice and Papers, No. 21"

Frank G. Perkins, Manufacturer of Special Glues, Sold to R. M. Parker, Agent, 117 Wall St., New York

Your Order No. File 288.
Our Order No. 590.
Via Freight.
Shipped to Poplar Bluff, Mo.
Date of Shipment Oct. 18, 1909.

South Bend, Indiana, Oct. 22, 1909.

Oct. 18, 300 Bags Glue:

Gross	61,275 lbs.			
Tare 3 lbs. to bag	900 "			
Net	60,375 "	at 7.32	4,437 56	
300 Bags		at .10	30 00	
				4,467 56
Less freight				403 68
				4,063 88

Out from factory A. C. L. car 27150, B/L direct to Poplar Bluff.
Paid November 8, 1909. Frank G. Perkins, by E. C. D.
(100 bags marked "H").
(200 " " "L").
Items, O. K.

Prices, O. K. H. C. Smith.
Extensions O. K.
Charge Poplar Bluff, Mo.
Receipt & return to 117 Wall St., N. Y. City.
Dup. sent Barron 10/26/09.

[fol. 972] "Defendants' Exhibit Brooklyn Cooperage, Invoice and Papers, No. 21A"

Frank G. Perkins, Manufacturer of Special Glues, Sold to R. M. Parker, Agent, 117 Wall St., New York

Your Order No. File 288.
Our Order No. 590.
Via Freight.
Shipped to Poplar Bluff, Mo.
Date of Shipment Oct. 18, 1909.

South Bend, Ind., Oct. 22, 1909.

Oct. 18, 300 Bags Glue:

Gross	61,275 lbs.			
Tare 3 lbs. to bag	900 "			
Net	60,375 "	at 7.35	4,437 56	
300 Bags		at .10	30 00	
				$4,467 56
Less freight				403 68
				$4,063 88

Out from factory A. C. L. car 27150, B/L direct to Poplar Bluff.
Paid Nov. 8, 1909.
(100 bags marked "H").
(200 " " "L").

Duplicate

Received { 19,990 lbs. Light / 40,385 " Heavy } Oct. 29/09. P. H.

[fol. 973] "DEFENDANTS' EXHIBIT BROOKLYN COOPERAGE, INVOICE AND PAPERS, No. 22"

Frank G. Perkins, Manufacturer of Special Glues, Sold to Mr. R. M. Parker, Agt., 117 Wall St., New York

Your Order No. Letter 12/6/09.
Via Freight.
Shipped to Poplar Bluff, Mo.
Date of Shipment December 21, 1909.

South Bend, Ind., Dec. 22, 1909.

Dec. 21, 300 Bags Glue:
Gross Weight 61,275 lbs.
Tare 3# to bag 900 "

Net	60,375 "	at 7.35	4,437 56	
300 Bags		at .10	30 00	
				4,467 56
Less freight				229 10
				4,238 46

Marked —.
100 Bags "H."
200 Bags "L."
Out from factory in P. & R. Car #3315.
12/21/09. B/L attached.
Items, O. K.
Prices O. K. H. C. Smith.
Extensions O. K.
Charge Poplar Bluff Mill.
Receipt & return to 117 Wall St., N. Y. City.
Dup. & B/L sent to W. N. B. 12/24/09.
Paid Jan. 11, 1910. Frank G. Perkins, by E. C. D.
Thanks.

[fol. 974] "Defendants' Exhibit Brooklyn Cooperage, Invoice and Papers, No. 22A"

Frank G. Perkins, Manufacturer of Special Glues, Sold to Mr. R. M. Parker, Agent, #117 Wall St., New York

Your Order No. Letter 12/6/09.
Via Freight.
Shipped to Poplar Bluff, Mo.
Date of Shipment Dec. 21/09.

South Bend, Indiana, Dec. 22, 1909.

Dec. 21, 300 Bags Glue:
Gross Weight 61,275 lbs.
Tare 3# to bag 900 "

Net	60,375 "	at 7.35	4,437 56	
300 Bags		at .10	30 00	
				4,467 56

Marked —.
100 Bags "H."
200 Bags "L."
Out from factory in P. & R. Car #3315. 12/21/09. B/L attached
Paid Jan. 11, 1910.

Duplicate

20,470 lbs. Heavy }
39,905 " Light }
Received 1/6/10. O. K.

60,375 "

P. Handle frt. 229 10

[fol. 975] "DEFENDANTS' EXHIBIT BROOKLYN COOPERAGE INVOICE AND PAPERS No. 23"

Frank G. Perkins, Manufacturer of Special Glues, Sold to Mr. R. M. Parker, Agt., 117 Wall St., New York

South Bend, Indiana, Mar. 21, 1910.

Your Order No. Letter 3/4/10.
Via Freight.
Shipped to Poplar Bluff, Mo.
Date of Shipment March 11, 1910.

Mar. 11, 400 Bags Glue:				
Gross	60800 lbs.			
Tare 2# to bag	800 "			
Net	60000 "	at 7.35	4410.00	
400 Bags		at .10	40.00	
				4450.00

Out from factory at Lansdale, Pa. in C. St. P. M. & O. car #27430 March 11, 1910. B/L direct.

Less Freight	228.00
	4222.00

240 Bags marked "L."
160 " " "H."
Items O. K.
Paid April 4, 1910.
Prices O. K. H. C. Smith.
Extensions O. K.
Charge Poplar Bluff Mill.
Dup. sent to W. N. B. 3/23/10.
Receipt & return to 117 Wall St. N. Y. City.
Paid Apr. 7, 1910. F. G. Perkins.

[fol. 976] "DEFENDANTS' EXHIBIT BROOKLYN COOPERAGE INVOICE AND PAPERS No. 23-A"

If the goods called for on this invoice have been received, check the bill and return to New York Office for payment.

Brooklyn Cooperage Co.

Kindly advise freight paid.
$228.00 Frt.

"Defendants' Exhibit Brooklyn Cooperage Invoice and Papers No. 23-B"

Frank G. Perkins, Manufacturer of Special Glues, Sold to R. M. Parker, Agent, 117 Wall St., New York

South Bend, Indiana, Mar. 21, 1910.

Your Order No. Letter 3/4/10.
Via Freight.
Shipped to Poplar Bluff, Mo.
Date of shipment March 11, 1910.
Mar. 11, 400 Bags Glue:

Gross	60800 lbs.		
Tare 2# to bag	800 lbs.		
Net	60000 lbs. at 7.35	4410.00	
400 Bags	at .10	40.00	
			4450.00

Out from factory at Lansdale, Pa. in C. St. P. M. & O. car #27430 Mar. 11, 1910. B/L direct.
240 bags marked "L."
160 " " "H."
Paid April 4, 1910.
Received O. K. P. H.
Prices O. K.
Extensions O. K.
Department Veneer.
Frt. 228.00 36000 lbs. light
24000 " heavy
60000 "

[fol. 977] "Defendants' Exhibit Brooklyn Cooperage Invoice and Papers No. 24"

Frank G. Perkins, Manufacturer of Special Glues. Sold to R. M. Parker, Agent, 117 Wall Street, New York City

Via P. & R. N. Y. C. L. S, CCC & St. L.—St. L. & I. M. at Cairo.

Shipped to Poplar Bluff, Mo.

South Bend, Ind., June 28, 1910.

Date of Shipment June 28, 1910.

402 Bags Glue:

Gross Weight.	60,804 lbs.			
Tare 2# per bag	804 "			
	60,000 "	at 7.35¢..	4410 00	
402 Bags		at 10¢..	40 20	
				4450 20
Less Freight				228 00
				4222 20

Shipped from Lansdale, Pa. in P & R car #2159.

134 Bags marked "H."
268 " " "L."
Paid July 15th, 1910.
Items O. K.
Prices O. K. H. C. Smith.
Extensions O. K.
Charge, Poplar Bluff.
Dup. sent to W. N. B. 7/1/10.
Receipt & Return to 117 Wall St. N. Y. City.
Paid July 16, 1910. F. G. Perkins, by S. D. Taylor.

[fol. 978] "Defendants' Exhibit Brooklyn Cooperage Invoice and Papers No. 24-A"

Frank G. Perkins, Manufacturer of Special Glues. Sold to R. M. Parker, Agent, 117 Wall Street, New York City

402 Bags Glue:

Gross Weight.	60,804 lbs.			
Tare 2# per bag	804 "			
	60,000 "	at 7.35¢..	4410 00	
402 Bags		at 10¢..	40 20	4450 20
Less Freight				228 00
				4222 20

Shipped from Lansdale, Pa. in P & R car #2159.

134 Bags marked "H."
268 " " "L."
Received O. K. P. H.
Prices O. K.
Extensions O. K.
Department, Veneer.
Freight $228.00.
Paid July 15th, 1910.

"Defendants' Exhibit Brooklyn Cooperage Invoice and Papers No. 24-B"

Philadelphia & Reading R. R. Co.

March 12, 1910.

From Frank G. Perkins.

6th class
39

Poplar Bluff, Mo.
Consigned to Brooklyn Cooperage Co.,
Destination Poplar Bluff, State of Mo., County .....
Car Initial C. St. P. M. & O.
Car No. 27430.

No. of packages Description of Articles Wt.-Sub to Cor. and Special Marks.

60,000

400 Bags Cassova (Marked L. & H)
N. Y. C. at Harlem Lake Shore.
C. C. C. & St. L.—St. L. I. M. at
Cario, Butler Co., R. R. delivery.
Frank G. Perkins, Shipper, per A. A. Soules
H. M. Fret, Agent. Per L.

[fol. 979] "Defendants' Exhibit Brooklyn Cooperage Invoice and Papers No. 25"

Night Message

The Western Union Telegraph Co.

Received at the Western Union Building 195 Broadway, N. Y. Feb. 23, 1905.

M 137 UH MD 13 Paid Nite Feb 23—
Poplar Bluff Mo Feb 23—

Lowell M. Palmer,
184 Front Str. New York.

Letter containing full report on new glue should reach you morning twenty fourth.

Nelson Windsor—1112 pm

"Defendants' Exhibit Brooklyn Cooperage Invoice and Papers, No. 25-A"

Night Message

The Western Union Telegraph Co.
Received at the Western Union Building 195 Broadway, N. Y. 9374
X47A
VK AW 30 Paid Nite 1140PM
Poplarbluff Mo Feb 23

Lowell M. Palmer,
184 Front Street, New York.

Your tests proving better adhesion and lower cost I consider farley won contract per agreement will leave Tuesday for New York returning here for tight barrel work if you desire.

F. G. Perkins.

[fol. 980] Plaintiff's Exhibit 83, German Patent Office Papers

Certification

To the firm Perkins Glue Company, of Lansdale, Pennsylvania, U. S. A., which has filed an application for patent in the German Empire for

"Glue and Process of Making the same"

November 4, 1911, it is certified that the attached papers are identical with the original papers found in the file of this patent application, namely, the Preliminary Discussion of January 5, 1912, the decisions of May 28, 1912, October 24, 1912, November 4, 1912, November 25, 1913, December 21, 1914 and with the patent claims, on the basis of which the patent has been granted.

Berlin, January 14, 1915.

The President of the Imperial Patent Office. F. V. (Sgd.) Schafer. (Seal of Imperial Patent Office. P. 27783 IV/22i.)

Copy

Imperial Patent Office

Berlin, January 5, 1912.

Preliminary Discussion in the Matter of Patent Application of the Firm Perkins Glue Company, of Lansdale, Regarding "Glue and Process of Making the Same," Filed November 4, 1911

In accordance with Sec. 21 of the Patent Laws, the applicant is summoned to reply to this preliminary discussion, hereinafter given, within two months.

If this explanation is not received at the Patent Office within the specified time, the application will be considered withdrawn, in accordance with Sec. 21, Par. 4, of the Patent Laws.

The degenerating of starch-containing materials in the wet way (therefore also Cassava), in such manner, that the starch containing substance is subjected for a longer period [fol. 981] to the action of 1% to 3% acid (sulphuric acid, or the like) at a temperature lying between 50° or 55,5°, then neutralized, dried, and thereafter dissolved into a glue solution with hot water or with the addition of a dilute caustic alkali, is known—compare the patents 110957 and 118089 of Class 89.

Instead of effecting the degeneration with acids, it is not new to employ oxidizing agents, such as sodium peroxide, etc.,—compare the patent 167275, Class 22i. P. 27783 IV/22i.

In view of the above, there is no patentable invention according to the opinion of the Examiner.

Imperial Patent Office, Application Department IV, (Sgd.) Dr. Lochner. To Patent Attorney Mr. Paul Muller, in Berlin, S. W. 11.

Imperial Patent Office

Berlin, May 28, 1912.

Decision

The patent application of the firm Perkins Glue Company, filed November 4, 1911, for

"Glue and Process of Making the Same"

is refused on the ground of Sec. 22 of the Patent Laws.

Reasons

According to the application, starch is heated with sulphuric acid at about 54,5° C. and the resulting product is brought into solution with caustic alkalies or similarly acting mediums. Such a process shows no materially new

features in view of the cited processes of the patents 110957 and 118089 of Class 89k. Also according to these known processes, starch, previously treated with sulphuric acid is dissolved in an excess of alkali. What concentration in the alkali treatment is to be maintained is ascertained by the expert by means of simple tests: he will, from the beginning, not work with too dilute solutions, because the sticking power is naturally decreased in dilute solutions. Also the products made in a known manner by the dissolving of starch in cold or hot caustic alkali are designated "vegetable glues" (compare the beginning of cited patent 167275 of Class 22i) and it also appears obvious to apply such vegetable glues to the uses for which animal glues have been [fol. 982] mainly used up to the present time. And finally, as no new special technical effect is shown for the use of cassava starch, so, upon consideration of the petition of March 11, 1912, a new patentable invention can not be seen in what is still claimed.

An appeal may be taken against this decision in accordance with Sec. 26 of the Patent Laws, within one month after the notification. With the filing of the appeal, to cover the costs of the appeal, Mks. 20 are to be paid in to the till of the Patent Office, specifying the file number and the disposition of the money ("Appeal fees"),—postage and delivery prepaid. If this payment is not effected, the appeal will be considered as not taken.

If payment is made to the Postal Check Account of the Patent Office, Berlin No. 2, by means of paycard, the costs of the check transaction must be paid in addition to the due tax, that is, for payments up to Mks. 500,—12 Pfennige, and further 5 Pfennige for each additional Mks. 500.

If payment is made to the Postal Check account by means of transfer or postal check, the fee of 7 Pfennige, provided for in Par. 914 of the Regulation relating to Postal Check payments must be added to the tax due.

Imperial Patent Office, Application Department IV.
(Sgd.) Lehne.

To Patent Attorney Mr. Paul Müller, in Berlin S. W. 11.

Imperial Patent Office

Berlin, October 24, 1912.

In acknowledgment of the appeal taken, the publication of the application on the basis of the papers filed on September 26, 1912, will take place, but only after the modification of the claim 1, as follows:

"Process of making wood glue from starch by the action of caustic alkali, characterized thereby, that the factors influencing the operation, namely, kind of starch, concentration, time, temperature and method of stirring, are so adjusted to one another during the alkali treatment, that the resulting thread drawing product assumes the spreadibility necessary for the glueing of wood."

It appears probable that according to the claimed process a product can be obtained which possesses the sticking [fol. 983] power characteristic of animal glue, as brought out in the glueing of wood, while on the other hand this result was not to be foreseen from the cited literature. It might be said in opposition that the claims characterize no definite process, defined with sufficient sharpness from what is known, but characterize chiefly a problem without specifying the required means for its solution. By the applicant, however, it is shown by means of numerous examples, but the conditions vary under which the starch with the treatment with caustic alkali will produce a glue having the sticking power stated, so that it would not be justifiable to restrict the claims to single definite working processes. In the present case the definite feature of the invention is the result of the process. On the other hand the specification shows, that the possibility of processing starch by means of caustic alkali into a wood glue is explained in such a manner that the invention seems to be sufficiently made clear in the sense of the patent law.

The applicant is requested to agree with the proposed modification of the claim within a month and to give specific reasons of any possible objections.

Imperial Patent Office, Chamber of Appeals II.

(Sgd.) Robolski, Neuberg, Tohl, Hafner.

Also for Dr. Schrohe, absent from service.
To the Patent Attorneys, Messrs. Meffert & Dr. Sell, Berlin.

Imperial Patent Office.

Berlin, November 4, 1912.

The following decision is hereby served:

Complying with the request, the publication will be delayed for a period of three months.

The first annual tax of Mks. 30. is to be paid into the till of the Patent Office, specifying the file mark and the disposition of the money (1. Annual Tax), postage and delivery prepaid. If payment is made to the Postal Check Account of the Patent Office, Berlin No. 2, by means of pay-card, the costs of the check transaction must be paid in addition to the due tax, that is, for payments up to Mks. 500,— 12 Pfennige, and further 5 Pfennige for each additional Mks. 500. According to Sec. 24 of the Patent Law, the ap-[fol. 984] plication will be considered withdrawn if payment has not been made within the term of two months after the publication has taken place in the "Reichsanzeiger" (Imperial Gazette).

Imperial Patent Office, Chamber of Appeals II.
(Sgd.) Robolski.

The Patent Office, Chamber of Appeals II, has decided to grant the appeal of applicant, the firm Perkins Glue Company, of Lansdale, Pennsylvania, U. S. A., against the decision of the Application Department IV, of May 28, 1912, on the grounds of the decree of October 24, 1912, and to publish the application with the title "Process for the Manufacture of Wood Glue from Starch."

The date of application is set as November 4, 1911. The specification, together with the patent claims filed September 26, 1912, after the modification of claim 1, as per the before-mentioned decree, will be published.

Imperial Patent Office, Chamber of Appeals II.
(Sgd.) Robolski, Neuberg, Schrohe, Tohl, Hafner.

To Patent Attorneys, Messrs. Meffert & Dr. Sell, Berlin.

Imperial Patent Office

Berlin, November 25, 1913.

Decision

The application of the firm Perkins Glue Company, of Lansdale, Pennsylvania, U. S. A., entered November 4, 1911, is hereby refused after due publication and examination of the objections raised to the applied for patent for "Process for the Manufacture of Wood Glue from Starch."

Reasons

The Chamber of Appeals II of the Imperial Patent Office, which decided upon the publication of the present application, has recognized as unforeseen, the result of the process for which a patent is applied for, the securing of a product with the characteristic sticking power of animal glue, as brought out in the glueing of wood, after the preliminary [fol. 985] examination of literature cited as conflicting, in the procedings before the Chamber of Appeals. The cited conflicting literature was the patents 88468, 110,957, 118,089 and 167,275, as well as Breuer's "Cements and Adhesives," 1907, pp. 89 and 90. The Chamber of Appeals has recognized the determining feature of the discovery in the result of the process. To this position of the Chamber of Appeals, the wording of the specification also corresponds. Compare especially p. 1, the last paragraph and the one before it, and the last paragraph on page 4. The knowledge that a product having the sticking power of animal glue could be obtained from starch and caustic alkali appears, however, according to the testimony of the opponents to be not new. In the Chemical-technical Recipe Pocket Book for the whole wood industry, especially for the use of the woodcarver, cabinet maker and joiner, etc. by Wilhelm Schmidt, quoted by them, is found on p. 61 a formula for preparing a substance from starch and caustic alkali which is to be employed in place of animal glue. In view of the above it is no longer correct to say, as does the applicant in its reply to the objection of Otto E. Wolff, August 8, 1913, p. 2 at the bottom et seq., that "it was entirely unknown hitherto that in a solution of starch in alkali

and water there resides the sticking power of animal glue, a sticking power which so binds two pieces of wood together that when pulled apart, the separation takes place not in the glue layer, but in the wood along the fiber." Nor is it correct, as the applicant in the same communication says, p. 5, par. 3, that Apparatine is nowheres mentioned in the literature as a glue for joinery purposes. Naturally, the formula given in Schmidt's book will be so carried out that the product will have all the essential properties for the glueing of wood and give the best results as a wood glue. Such a modification of a known formula does not go beyond what would be expected and required in every practical working out of known formulas. In addition it is also known, as the opponents have pointed out, that the manner and duration of stirring the starch during its conversion by alkalies is of vital importance, compare e. g. the book of Schmidt quoted, p. 61 and Farben Zeitung 1910/11, 1, p. 47. The tests which are mentioned in reply to the objection of O. E. Wolff, of August 8, 1913, on page 3 at the bottom, also prove nothing in favor of the process applied for and in view thereof no new patentable invention can be seen in claim 1. Also no new features can then be recognized in [fol. 986] claims 2 and 3. For to convert a degenerated starch, changed in its molecular condition, into an adhesive is known, as applicant admits; and, for the use of a product not yet clearly soluble in hot water (in contradistinction to that which is above described as admitted), a new technical effect is also not shown on pp. 9-10 of the reply to the objections of Otto E. Wolff, the opinion of Dr. H. Wolff. The same holds for claim 3, concerning which it is to be observed, as the applicant does not deny that cassava belongs to the well known and much used kinds of starch.

Consequently, in the subject matter of the application a new patentable invention is not seen.

The patent sought is therefore refused.

An appeal may be taken against this decision in accordance with Sec. 26 of the Patent Laws, within one month after the notification. With the filing of the appeal, to cover the costs of the appeal, Mks. 20. are to be paid into the till of the Patent Office, specifying the file number and the disposition of the money ("Appeal Fees"),—postage

and delivery prepaid. If this payment is not effected, the appeal will be considered as not taken.

Imperial Patent Office, Application Department IV.

Sgd. Dr. Lehne.

1) To (Applicant) Patent Attorneys Messrs. Meffert & Dr. Sell in Berlin.

2) To (Opponent) the firm Otto E. Wolff, Chemical-technical Products Factory, in Berlin O 112, Frankfurter Allee 63.

3) To (Opponent) the firm Julius Lichtenberger & Co., Gum- & Vegetable Glue Factory, at Speyer on the Rhine.

4) To (Opponent) the firm Pfeiffer & Dr. Schwandner, at Ludwigshafen, on the Rhine.

5) To (Opponent) the "Collodin" Adhesive Works, formerly Gustav Wolff, at Mainkur, near Frankfort on the Main.

6) To (Opponent) the firm Louis Blumer, Chemical Factory at Zwickau, Saxony.

7) To (Opponent) the firm Ferdinand Sichel, Limmer Chemical Factory, in Limmer, near Hanover,—by Patent Attorney, A. W. Brock, in Berlin S. W. 11.

[fol. 987] Imperial Patent Office

Berlin, December 21, 1914.

The following decision is hereby rendered.

The patent runs from November 5, 1911.

With the rendering of the decision, the annual patent fees not yet paid (compare Article 8 of the Patent Law) become due and should be paid within six weeks to the Cash Department of the Patent Office, postage and delivery prepaid, stating the file number and purpose of the remittance. After the expiration of this time, payment may only be made within the following six weeks, with the addition of a tax of 10 Marks.

If payment is made to the Postal Check Account of the Patent Office, Berlin No. 2, by means of a paycard, the costs of the check transaction must be paid in addition to the due tax, that is, for payments up to Mks. 500.-12 Pfennige, and further 5 Pfennige for each additional Mks. 500.

If payment is made to the Postal Check Account by means of transfer or postal check, the fee of 7 Pfennige, provided for in Par. 914 of the Regulation relating to Postal Check payments must be added to the tax due.

The patent expires if the taxes are not paid in full and in due time.

After registration in the Patent Register, the number of the patent will be communicated and as soon as the Patent Specification is printed, the Letters Patent will be transmitted.

Imperial Patent Office, Chamber of Appeals II.
(Sgd.) Dr. Thiel.

In the matter of the appeal of the Perkins Glue Company, of Lansdale, Pennsylvania, U. S. A. (represented by Fr. Meffert & Dr. Sell, Patent Attorneys) from the decision of the Application Department IV. of November 25, 1913, denying the patent applied for, the Patent Office, Chamber of Appeals II has decided to grant the appeal, and, with a reversal of the assailed decision, to grant a patent on the basis of the published specification, with the title:

"Process for the Preparation of Wood Glue from Starch"

November 4th, 1911 is set as the filing date of the application.

[fol. 988] Reasons

The essence of the invention for which a patent is applied for is based upon the new conception that the action of caustic alkali upon starch may be so conducted that a product results which shares with animal glue the valuable property of so firmly cementing together two pieces of wood that upon tearing them apart, the separation does not take place in the joint, but in the wood itself. That this is possible, and especially that the examples given in the published specification lead to products with such properties, has been disputed by none of the opposing firms. The question arises therefore, whether this conception was actually new at the time of the filing of the said application, and especially also, whether it could have been derived from the publications cited by the opposing firms.

Referring first to the formula for a "Vegetable Glue" given in the Chemical-Technical Recipe Pocketbook of W. Schmidt, 1882, p. 61, upon which the rejection in the first instance was based, it contains no disclosure of the invention for which the patent is applied for. The positive assertion of the applicant, proven by comparative tests, that this formula does not lead to a product having the great binding power characteristic of a wood glue, has not been denied by the opposing side. In consequence, the statement in the publication in question, that the material is to be employed "for sizing all kinds of merchandise as well as for other industrial purposes and, especially also, in place of animal glue" is to be construed that such used are had in mind in which great mechanical binding power of the adhesive substance is not essential, as for example, the sizing of fabrics and the glueing of paper. The recommendation of the material as a substitute for animal glue is not at variance with this construction, since it is known that this adhesive substance is not only used for the joining of wood, but also for the above described purposes. It therefore appears that the point of view taken in the prior decision that it would be obvious to so modify the mentioned formula that a product possessing all the properties essential for a glue for wood would be obtained, is not sufficiently substantiated. To modify the formula in this sense requires first of all a clear comprehension of the above mentioned conception. Besides this, it is distinctly said of the formula, that the same gives the most favorable proportions, so that for this very reason it did not suggest the making of material modifications.

[fol. 989] It is not materially different with the other publications to which the expert Dr. Wolff refers. They only show the undisputedly known fact that starch may be worked, by means of degeneration with caustic alkali or similar mediums, into products, the so-called vegetable glues, which are suitable as substitutes for known adhesive substances, such as gums and glues for sizing purposes and the like. It is just as little disputed from these known facts that the claimed process used means and measures which are already in practice in the corresponding art. But it cannot be deduced from these publications that it would be possible to so influence the process during the

action of caustic alkali upon a given kind of starch by a relative adaptation of the respective factors (concentration, time, temperature and stirring method) that a preparation results, which can serve as a complete substitute for wood glue. In view of this the further allegations of the opposing parties with respect to claims 2 and 3, that starch degenerated to different degrees has already been used for a long time for the preparation of vegetable glue and that cassava starch is among the best known starches of commerce, are immaterial.

So the proof has not been produced by the opposing parties that the repeatedly mentioned conception upon which the invention rests, for which a patent is applied for, was not new. Therefore, the claimed process based thereon must be considered a patentable invention, in spite of the fact that known means are employed therein.

Some of the opposing firms however further assert that the claimed process had been previously publicly used by them. However, nothing has been brought forth that would make this assertion appear justified.

Although as to do so, the two firms, Julius Litchenberger & Co., and Louis Blumer, were not able to cite particulars from which the public knowledge of the prior use allegedly practiced by them and corresponding to the claimed process, could be deduced. The first mentioned firm even admitted that the formulæ books according to which the work was carried on by them, were kept in code. The alleged fact, that products, analogous to the preparations of the application, have for a considerable time been put on the market by the opposing parties, could not prove the open knowledge, since the character of the product does not in and of itself allow of a conclusion as to the method of its manufacture.

The firm Ferdinand Sichel Chemische Fabrik Limmer in its brief of May 16, 1914 (page 2) refuses to state sufficiently the method of operation used by it. It has therefore [fol. 990] failed to bring proof of the claimed identity of its process with that of the application. This identity cannot be assumed either, since otherwise the manifest keeping secret on the part of the opposing party of their method of operation, would not be understandable. An examination of the named witnesses was therefore useless.

With respect to the allegation of the opposing parties that the published claims do not characterize a definite process, the statement given in the main claim, to strive for the desired result by a relative adjustment of the working factors considered during the action of caustic alkali upon a definite kind of starch, is sufficient as a characterization of the process to be protected. How this adjustment is to be understood in order to obtain, from various kinds of starch, the product of the application, sharply defined by its characterization as wood glue, is clearly explained in the description with the help of numerous examples of the process so that no doubts can arise as to the nature of the process to be protected.

In view of these circumstances, the patent demanded is to be granted according to the published specification. Imperial Patent Office, Chamber of Appeals II,

(Sgd.) Dr. Thiel, Dr. Jungmann, Schrohe, Tohl, Hafner.

To Patent Attorneys, Messers F. Meffert & Dr. Sell, in Berlin.

Berlin, December 21, 1914.

The following decision is hereby rendered.

(Decision and Reasons see supra Pages 14-19).

The submitted Recipe Pocket Book for the Whole Wood Industry is forwarded herewith.

Imperial Patent Office, Chamber of Appeals II,
Sgd. Dr. Thiel.

To the firm Otto E. Wolff, Chemical-Technical Products Factory in Berlin, O 112 Frankfurter Alee 63.

Berlin, December 21, 1914.

The following decision is hereby rendered.

(Decision and Reasons see supra Pages 14-19)

Imperial Patent Office, Chamber of Appeals II,
Sgd. Dr. Thiel.

[fol. 991] To the firm Julius Lichtenberger & Co., Gums & Vegetable Glue Factory in Speyer on the Rhine.

To the firm Pfeiffer & Dr. Schwandner, in Ludwigshafen, Rhine.

To the "Collodin" Adhesive Works, formerly Gustav Wolff, in Mainkur, near Frankfort on the Main.

To the firm Louis Blumer, Chemical Factory in Zwickau, Saxony.

To Mr. August Waldemar Brock, Patent Attorney in Berlin: Opponent, firm Ferdinand Sichel, Limmer Chemical Factory.

P. A. 421915. Filed 9. 26. 12:

Perkins Glue Co.

Patent Claims

1. Process of making wood glue from starch by the action of caustic alkali, characterized thereby, that the factors influencing the operation, namely, kind of starch, concentration, time, temperature and method of stirring, are so adjusted to one another during the alkali treatment, that the resulting thread drawing product assumes the spreadibility necessary for the glueing of wood.

2. Process, according to claim 1, with preliminary treatment of the starch by hydrolizing or oxidizing substances, characterized by the fact that as starting material for the alkali treatment there is used a slightly degenerated product, not yet clearly soluble in hot water.

3. Process, according to claims 1 and 2, characterized by the fact that cassava is used as the starch containing material.

Sgd. Meffert.

[fol. 992] DEFENDANTS' EXHIBIT No. 3

United States of America, Department of the Interior

To all to whom these presents shall come, Greeting:

This is to certify that the annexed is a true copy from the Records of this Office of the File Wrapper and Contents in the matter of the Letters Patent of Frank G. Perkins; Gertrude S. Perkins, Executrix of said Frank G. Perkins,

deceased, Assignor to Perkins Glue Company, Number 1,020,655, Granted March 19, 1912, for Improvement in Glue and Methods of Making the Same.

In testimony whereof I have hereunto set my hand and caused the seal of the Patent Office to be affixed at the City of Washington, this 10th day of June, in the year of our Lord one thousand nine hundred and fourteen and of the Independence of the United States of America the one hundred and thirty-eighth.

R. F. Whitehead, Acting Commissioner of Patents.
(Seal.)

[fol. 993]

A

2-437

Number (Series of 1900) 460,737 1908 Div. 31 (Ex'r's Book). 149

Patent No. 1020655 1022

Name Frank G. Perkins;
Gertrude S. Perkins, Executrix of estate of said Frank G. Perkins, dec'd. Assor. to Perkins Glue Company, a corp., of Pa.
of South Bend;
County of
State of Indiana.
Invention
Adhesives and Method of Making the Same.

Division of App., No. — filed ——, 190
Reissued July 2, 1912
No. 13436.

Parts of Application filed.

	Original.	Renewed.
Petition	November 2, 1908	——, 190–
Affidavit	" " 1908	——, 190–
Specification	" " 1908	——, 190–
Drawing	None , 190–	——, 190–
Model or Specimen	—— , 190–	——, 190–
First Fee Cash $15;	Nov. 2, 1908	——, 190–
" " Cert.	—— , 190–	——, 190–
Appl. filed complete	Nov. 2, 1908	——, 190–

Examined G. S. Ely, Exr.
Dec. 13, 1911
Countersigned H. B. Burch —— ——,
For Commissioner. For Commissioner.
Notice of Allowance
Dec 22, 1911 ——, 190–
Final Fee Cash $20 Feb. 20, 1912 ——, 190–
" " Cert. , 190- ——, 190–
Patented March 19 ——, 1912
Associate Attorney, Attorney-, Kenyon & Kenyon;
49 Wall St., N. Y. City.
Name —— ——. Serial No. —.
Patent No. —. Date of Patent —— —.
No. 460737 Div. 31.

[fol. 994] 2-057

Memorandum

The first of $15, applied to the application of Frank G. Perkins was included in composite letter No. — received Nov. 2/08, which letter is on file in the Mail Room.

S. M. Pool, Application Clerk.

Mail Room, Nov. 2, 1908, U. S. Patent Office

KIM

Serial No. 460,737

Div. 31

A

PETITION

To the Commissioner of Patents:

Your Petitioner, Frank G. Perkins, a citizen of the United States, a resident of and whose Post Office address is 211 North Lafayette Street, South Bend, County of Saint Joseph, State of Indiana, prays that Letters Patent may be granted to him for certain new and useful improvements in adhesives and method of making the same (Case 1) set forth in the annexed specification.

Your petitioner hereby appoints the firm of Kenyon & Kenyon (Registered No. 2570), composed of Wm. Houston Kenyon, Alan D. Kenyon, Robert N. Kenyon and Richard Eyre of 49 Wall Street, New York City, his attorneys, with full power of substitution and revocation, to present and prosecute this application, to make alterations and amendments therein, to sign the drawings, to receive the patent, [fol. 995] and to transact all business in the Patent Office connected therewith.

Signed at New York City, this 24th day of October, 1908.

Frank G. Perkins.

Specification

To all whom it may concern:

Be it known that, I Frank G. Perkins, a citizen of the United States, and a resident of South Bend, County of St. Joseph, and State of Indiana have invented cer-

[*Words and figures enclosed in brackets erased in copy.]

Per D. tain new and useful improvements in glue [adhesives]* and method of making the same of which the following is a specification:

My invention relates to improvements in adhesives and the method of making the same, and more particularly to the manufacture of adhesives or glue from carbohydrates and especially those containing cellulose.

In the well known method of making a "starch paste" the solid is mixed with water enough, to make, after "cooking up," a paste of such viscosity or density that it can be easily applied. This mixture is then subjected to heat to rupture or burst the cellulose walls and this cooking to a considerable degree reduces the cellulose to soluble starch. To increase the adhesive power small amounts of alkali have been added prior to heating, which, to a slight degree put into suspension or solution a portion of the cellulose, thereby forming a binder or tie in the paste. The progressive action of the alkali, however, greatly increased by heat, and itself increasing the reducing effect of the heat by mutual ac- [fol. 996] tion, very soon injures the adhesive power by its transforming the original valuable cellulose element into soluble starch and finally into sugar. This chemical change causes the paste to lose its Per A. "tack" or tenacity and its tendency to set and dry sets up fermentative destruction. Just in the degree that this chemical change progresses so the value of the adhesive is impaired. The paste in cooling also becomes thick and jelly-like and practically impossible to apply and use when originally made with considerable water, or diluted after cooking. If more water is added in an attempt to make it more fluid the paste becomes so weak and di- Sub [B]* C1 luted that it has practically no power and would be wholly unfit for most classes of work.

Various objects of my invention are to provide a glue and a method of making the same from carbohydrates, which will not have the disadvantages just

---

[*Words and figures enclosed in brackets erased in copy.]

pointed out, but which will be exceptionally tenacious and powerful but still amply fluid for easy application, and which can be economically and easily produced.

A further object of my invention is to produce an adhesive which will have the great practical advantage that it may be worked up with the same proportions of water as are now employed in the use of animal glues, thus being usable under the same working or factory conditions hitherto employed for animal glues. As far as I am aware, such conditions have never been met by any prior adhesive made from a carbohydrate base. A further important object of my invention is to produce an adhesive or glue which may be sold in a dry state and which may then be prepared for use by mixing up without the use of heat. Such improvements are of great practical and industrial advan- [fol. 997] tage [s]* and importance and have been much sought.

To do this I first take a carbohydrate of the proper kind and treat it with a reagent to decrease its water absorptive properties so that in order to render fluid the finished glue, comparatively little water will have to be added and the final glue will not thereby become seriously diluted. As a base I prefer to use the carbohydrate secreted by the cassava plant. After being treated as above, the dried material may be mixed with a small amount of water and with a solvent of cellulose, such as caustic alkali and a glue produced which is exceptionally powerful and which is very stable in its physical condition, so much so, that it may be kept for days or even weeks after it has been made into a liquid state without fermentative change. By my process the glue is free from the complications which attend the use of an adhesive which must be cooked or warmed before use, or kept warm during use, and is vastly more powerful than that which results from the treatment of starch by heat, which, only to a limited degree can obtain the benefit of the great tenacity of the cellulose, and is exceedingly liable to "souring" or fermentative changes.

[*Words and figures enclosed in brackets erased in copy.]

Further objects, advantages and features will more clearly appear from the detail description given below.

In carrying out one embodiment of my invention I take the cassava carbohydrate in dry form and add an equal weight of water. The batch is then agitated and heated to about 130° F. Then I slowly add from 2% to 3% of strong sulphuric acid, the mass being kept in continual agitation. The agitation is continued for from four to six hours after the acid has been added and then the acid may be neutralized by the addition [fol. 998] of a small amount of caustic soda or similar alkali. The batch is then cooled, drained and dried and packed in dry form until ready for use.

The above forms the first part of my improved process and the various steps therein may all be carried out at the factory. In commercial use I preferably ship the dry material, obtained as above, to the consumer who carries out the second part of the process at the place where the glue is to be used, but if desired the first and second parts of my improved process may be carried out together.

In carrying out the remaining steps in the preparation of my improved glue, the dried base, obtained as above, is mixed with from two to three parts, by weight, of water, according to the strength of the joint and economy desired. A liquid suspension is thereby formed which is agitated and treated with a solvent of cellulose, as for example, an aqueous solution of caustic soda or potash, using from six to ten per cent of the weight of the dry base, of dry alkali. The alkali, I believe, acts catalytically to put the cellulose of the carbohydrate into solution, although the solution may be merely colloidal, and in using the term "solution" I consider it broad enough to embrace colloids. The alkali is best added in the form of a solution of from 33% to 50% strength. Sodium and potassium hydrates are the most available and among the most powerful of the known solvents of cellulose and are well adapted for the purposes in question.

As previously stated when ordinary starch is heated with water it is capable of absorbing enormous quantities of water and if mixed with two or three parts

of water becomes of a stiff, jelly-like form which must [fol. 999] be very much diluted before it will be practically workable. I find, however, that by treatment with sulphuric acid or other reagents this water absorbing power can be regulated and greatly reduced and the jelly effect be prevented, although mixed under the same conditions and with the same proportions which, in an untreated starch would produce the previously described unworkable jelly. This I believe is due to the action of the acid upon the granulose in the starch with which the acid so reacts that the granulose will no longer absorb the large amounts of water as before. This substantially reduces the absorption of water by the starch and prevents it from becoming jelly-like and tough when afterward treated with the alkali. The carbohydrate thus changed is dried and may be then put on the market in dry form. In this case the last part of the process would be preferably carried out by the consumer. However, if desired, both parts of the process may be carried out by the manufacturer, or by the consumer, or in any other manner desired.

Per A.

25

In the second part of my improved process, only from one to three parts of water by weight to one part of the dry material are used and after adding the solvent it is found that even with such a small amount of water, the batch will assume a fluid consistency and will not become jelly-like and tough as in former processes. The alkali added acts to dissolve more or less of the cellulose, thereby forming an adhesive of very tenacious properties. The dry carbohydrate is mixed with the water without heat, although it may be used but to a slight degree only, if desired. By the preliminary treatment in reducing the water absorbing power of the carbohydrate, a very concentrated [fol. 1000] mixture of the adhesive and water may be obtained.

I believe that the cause of the tenacious properties when carbohydrates are treated with water and a strong solution of an alkali may be traced to the catalytic action of the alkali and that the amount of tenacity produced depends upon the amount of cellulose made

available to act as a bond or tie. Consequently I believe that to obtain the best results it is necessary to abstain from reducing the cellulose to soluble starch, and that sufficient cellulose must be left to make the glue amply tenacious. Therefore, the action of the acid and alkali should not be carried so far nor the temperature be too high as to destroy the cellulose or impair its strength by changing it into soluble starch and the starch into sugar.

In actual practice I have found that the best adhesive is produced by treating the base with the chemicals to reduce the water absorbing power to a point where the base if mixed with from 2 to 3 parts of water and subjected to heat of 170° F. would result in a syrupy condition instead of a thick jelly-like mass as would occur in an untreated base, so tested.

I find that by such suitable treatment under my process it is possible to produce from the base long filaments having superior strength to similar threads of animal glue. The diluted mixtures of pastes hitherto made from the natural carbohydrates in the manner explained before are wholly unfit for most classes of work since they contain so much water that it takes the joints very long to dry and when they do become dry there is so little material left that only a very weak bond is obtained. Thus it is of greatest importance and value to produce a concentrated glue solution [fol. 1001] ready for application, which parallels the animal glue solutions now employed industrially, in respect to water contents as well as strength. Practically all the water must be later removed that goes into the glue solution and is applied to the joints, hence an increase of water in the glue solution involves changes in drying methods, or in drying time, or in risks of injury to the material due to warping by the extra water, all of very serious consequence.

[Insert A1]* My improved glue is transparent and free from odor, and is very stable after mixing for use. Although, in the final glue the cellulose is dissolved in the caustic, the cellulose is still in

[*Words and figures enclosed in brackets erased in copy.]

such a condition that it is insoluble in water. Such a glue will, therefore, produce joints which are practically insoluble in water and which are unaffected by steam or other moisture. These features make my glue especially advantageous for purposes in which other glues are practically useless.

Although I have described my improvements in great detail and with much particularity and have mentioned particular compounds which I prefer to use, I desire it to be understood that I do not limit myself to such details and compounds, as many substitutes may be found, but having fully and clearly described my invention, what I claim and desire to secure by Letters Patent is:

Sub. [B1]* C1

[Matter enclosed between rules erased in copy.]

---

1. In the making of adhesives, the treating of a cellulose compound with a reagent to lessen its water absorptive properties.

Per A.

[Matter enclosed between rules erased in copy.]

---

a

1 [2].* The improved process for making adhesives which consists in treating a carbohydrate with a reagent to lessen its water absorptive properties and then treating it with a reagent to increase its adhesive properties.

Sub. [B2]* C1

[Matter enclosed between rules erased in copy.]

---

a

[fol. 1002] 2 [3].* The improved process for making adhesives which consists in treating of a carbohydrate material with an acid to lessen its water absorptive properties.

[*Words and figures enclosed in brackets erased in copy.]

4. The improved process for making adhesives which consists in treating a cellulose compound with an acid to lessen its water absorptive properties and
Per A. then treating it with a reagent to add to its adhesive properties.

[Matter enclosed between rules erased in copy.]

---

a
2 [5]* The improved process for making adhesives which consists in treating a cellulose material with an acid to decrease its water absorptive properties and then treating it with an alkali to increase
Sub. B2 C1 its adhesive properties.

[Matter enclosed between rules erased in copy.]

---

6. The improved process for making adhesives which consists in treating a carbohydrate with a reagent to lessen its water absorptive properties, and also treating it with an alkali to give it adhesive properties.

7. The improved process for making adhesives which consists in treating a cellulose compound by applying heat thereto, and treating it with a reagent
Per A. to decrease its water absorptive properties and then treating it with a reagent to add to its adhesive properties.

[Matter enclosed between rules erased in copy.]

---

a
3 [8].* The improved process for making adhesives which consists in treating cassava carbohydrate with substantially an equal weight of water, heating the same to about 130° F., adding from 2% to 3% by weight of an acid, slowly, and during agitation, [fol. 1003] neutralizing the batch with an alkali after

---

[*Words and figures enclosed in brackets erased in copy.]

from 4 to 6 hours agitation, then cooling and drying the batch, then adding from 2 to 3 parts by weight of water, and then while being agitated treating the same with a solution of a caustic alkali using 6% to 10% by weight of the dry alkali.

a

4 [9].* In the making of adhesives, the treating of cassava carbohydrate with a reagent to lessen its water absorptive property.

a

5 [10].* In the making of adhesives, the treating of cassava starch with a reagent to
Sub. [B2.]* C1 increase its adhesive properties.

5 [10].* In making of adhesives, the treating of cassava starch with a reagent to in-
Sub. [B2.]* C1 crease its adhesive properties.

[Matter enclosed between rules erased in copy.]

---

11. The improved process for making adhesives which consists in treating cassava starch with a reagent to decrease its water absorptive prop-
Per A. erties and then treating it with a reagent to increase its adhesive properties.

[Matter enclosed between rules erased in copy.]

---

a

6 [12].* The improved process for making adhesives which consists in treating cassava starch with an acid to decrease its water absorptive property and then treating it with an alkali to give it adhesive properties.

[Matter enclosed between rules erased in copy.]

---

a

7 [13].* The improved process for making adhesives which consists in treating cassava starch with a re-

---

[*Words and figures enclosed in brackets erased in copy.]

Sub. [B2.]* C1 agent to decrease its water absorptive property and then treating it with water and a solvent of cellulose to increase its adhesive properties.

[Matter enclosed between rules erased in copy.]

[fol. 1004] 14. In the making of adhesives, the treating of a carborydrate with a reagent to lessen its water absorptive property.

15. In the making of adhesives, the treating of a starch with a solvent of cellulose to give it adhesive properties.

16. In the making of adhesives, the treating of a starch with an acid to change its water absorptive properties.

17. The improved process for making adhesives which consists in treating a starch with a reagent to change its water absorptive properties and then treating it with a reagent to change its adhesive power.

18. The improved process for making adhesives which consists in treating a starch with an acid to decrease its water absorptive properties and then treating it with a base to increase its adhesive power.

19. The improved process for making adhesives which consists in treating a starch-cellulose material with a reagent to change its water absorptive property, and then treating it with a reagent to increase its adhesive power.

20. The improved process for making glue which consists in treating a cellulose material with a reagent to lessen its water absorptive properties and then treating it with a solvent of cellulose to increase its adhesive properties.

[Matter enclosed between rules erased in copy.]
[*Words and figures enclosed in brackets erased in copy.]

a
Per A. 8 [21].* The improved process for making adhesives which consists in treating a cellulose material with a reagent to decrease its water absorbing power and also treating it
Sub. [B2.]* C1 with a reagent which acts to put the cellulose into solution.

[Matter enclosed between rules erased in copy.]

[fol. 1005] 22. The improved process for making adhesives which consists in treating a cellulose material with a reagent to lessen its water absorptive property and then treating it with a reagent which acts to put the cellulose into a colloidal solution.

23. In the making of adhesives the treating of carbohydrates with a plurality of reagents to increase their adhesive power.

24. In the making of adhesives the treating of starch with a reagent to increase its adhesive properties.

25. The improved method for producing a base for adhesives which consists in treating a cellulose material with heat and a reagent to change its
Per A. water absorptive properties.

[Matter enclosed between rules erased in copy.]

a
9 [26].* The improved method for producing a base for adhesives which consists in treating cassava starch with heat, water and an acid reagent to change its water absorptive properties and then drying the same.

a
10 [27].* The improved method for producing a base for adhesives which consists in treating a cellulose

[Matter enclosed between rules erased in copy.]
[*Words and figures enclosed in brackets erased in copy.]

starch with heat, water, and a reagent to decrease its water absorptive properties and finally drying the same.

Sub. [B2.]* Cl

[Matter enclosed between rules erased in original transcript.]

Per A. 28. The improved process for making adhesives which consists in taking a basic starch material which has had its water absorptive properties changed, and treating it with a solvent of cellulose to increase its adhesive properties.

29. The improved process for making adhesives which consists in taking a basic starch cellulose material which has had its water absorptive properties [fol. 1006] decreased and treating it with a reagent to better its adhesive properties.

[Matter enclosed between rules erased in copy.]

a

11 [30].* The improved process for making adhesives which consists in taking a proper dry starch cellulose material and forming an adhesive glue with less than seven parts of water by weight to one of the dry material.

a

12 [31].* The improved process for making adhesives which consists in taking a [proper]* dry starch cellulose material and forming an adhesive glue therefrom, by mixing with it less than three parts of water by weight and a solution of a solvent of cellulose.

Per B.

[Matter enclosed between rules erased in copy.]

32. The improved glue which consists of a cellulose compound which has been treated with a reagent so that its water absorptive properties are decreased and which has been made more tenacious by treatment with a solution which acts to dissolve the cellulose.

Per A.

[Matter enclosed between rules erased in copy.]
[*Words and figures enclosed in brackets erased in copy.]

a

13 [33].* The improved glue base which consists of a dry cellulose material capable of being changed into a flowing solution by the addition of from two to three parts by weight of water.

a

Per B. 14 [34].* The improved glue base which consists of a dry starch-cellulose material so treated that its water absorptive properties are decreased so that it is capable of being converted into a flowing glue by the addition of from two to three parts of water.

[Matter enclosed between rules erased in copy.]

[fol. 1007] 35. The improved glue product which consists in the combination of an acid treated
Per A. cellulose material, water, and an alkali solution.

[Matter enclosed between rules erased in copy.]

a

15 [36].* An adhesive containing a carbohydrate with its natural water absorbing power altered and containing dissolved cellulose which is substantially insoluble in water.

[Matter enclosed between rules erased in copy.]

37. An adhesive containing dissolved cellulose substantially insoluble in water.

38. An adhesive embracing a carbohydrate with its natural water absorbing power decreased and containing cellulose in a form substantially insoluble in water.

39. An adhesive embracing a carbohydrate with its natural water absorbing properties changed and containing matter substantially insoluble in water.

[*Words and figures enclosed in brackets erased in copy.]

40. A fluent adhesive containing a carbohydrate and less than seven parts by weight of water to one of carbohydrate, said glue also containing matter insoluble in water.

41. A fluent glue embracing a cellulose carbohydrate and less than seven parts by weight of water to one of carbohydrate.

Per A.

[Matter enclosed between rules erased in copy.]

Per B. a 16 [42].* A fluent adhesive embracing a carbohydrate and less than seven parts by weight of water to one of carbohydrate, said carbohydrate embracing cellulose in a form substantially insoluble in water.

[Matter enclosed between rules erased in copy.]

---

43. A fluent glue composed of a carbohydrate and less than seven parts by weight of water to one of carbohydrate.

[fol. 1008] 44. A cold fluent glue composed of a carbohydrate and water.

45. A cold fluent adhesive composed of a cellulose carbohydrate and water.

46. A glue which is fluent when cold, composed of a carbohydrate which contains matter insoluble in water.

[Matter enclosed between rules erased in copy.]

---

a 17 [47].* An adhesive which is fluent when cold, composed of a carbohydrate and which contains cellulose in a form substantially insoluble in water.

a 18 [48].* An adhesive which is fluent when cold, composed of a carbohydrate and less than six parts by weight of water to one part of carbohydrate.

[*Words and figures enclosed in brackets erased in copy.]

a

19 [49].* A glue which is fluent when cold, composed of a carbohydrate and less than six parts by weight of water to one part of carbohydrate and which also contains dissolved cellulose which is insolu-
Per B. ble in water.

[Matter enclosed between rules erased in copy.]

---

50. An adhesive which is fluent when cold, composed of a cellulose carbohydrate material and a catalytic reagent.

Per A. 51. A cold fluent glue containing cellulose.

[Matter enclosed between rules erased in copy.]

---

a

Per B. 20 [52].* A glue mixture consisting of 1 to 3½ parts of water by weight, 1 part of a carbohydrate containing starch cellulose substantially insoluble in cold water, and a solvent of cellulose.

a

[Insert A2.]* 25 [53].* A glue mixture consist-
[Sub. B2.]* ing of 1 to 3½ parts of water by
Per C. weight, 1 part of carbohydrate containing starch cellulose dissolved by a catalytic reagent.

[Matter enclosed between rules erased in copy.]

[fol. 1009] In testimony whereof, I have signed my name to this specification, in the presence of two subscribing witnesses.

Frank G. Perkins.

Witnesses: 1. Gorham Crosby. 2. Edwin Seger.

[*Words and figures enclosed in brackets erased in copy.]

Oath

STATE OF NEW YORK,
County of New York, ss:

Frank G. Perkins, the above-named petitioner being duly sworn, deposes and says that he verily believes himself to be the original first and sole inventor of the certain new and useful improvements in adhesives and method of making the same described and claimed in the annexed specification; that he does not know and does not believe that the same was ever known or used before his invention or discovery thereof, or that the said invention was ever patented or described in any printed publication in this or any foreign country before his invention or discovery thereof; that no application for a foreign patent for the said invention has been filed or caused to be filed by him or his legal representatives or assigns in any foreign country; that the said invention has not to his knowledge and belief, been in public use or on sale in the United States, or patented or described in a printed publication or patent, more than two years prior to this application, and that he is a citizen of the United States and a resident of South Bend, County of Saint Joseph, State of Indiana.

Frank G. Perkins.

Subscribed and sworn to before me this 24th day of October, 1908. Edwin Seger, Notary Public for Kings County. Certificate filed in New York County. (Seal.)

[fol. 1010] 2—260

Div. 31, Room 169

Paper No. 1

Address only "The Commissioner of Patents, Washington, D. C." and not any official by name.

All communications respecting this application should give the serial number, date of filing, title of invention, and name of the applicant.

66—285

Department of the Interior,
United States Patent Office,
MDE. Washington, D .C., Dec. 12, 1908.
Mailed " " "

Frank G. Perkins,
c/o Kenyon & Kenyon, 49 Wall Street, New York, N. Y.:

Please find below a communication from the Examiner in charge of [the your]* application [of]* No. 460,737, Adhesives and Method of Making the Same, filed November 2, 1908. E. B. Moore, Commissioner of Patents.

"The" should be inserted before "same," in line 23, page 5.

It is thought that there is no ground for explaining the action of the alkali on cellulose as catalysis. Claims based thereon are untenable.

Attention is called to the British patent to Herzberg, 12,326 of 1897, which practically meets applicant's process.

Attention is further directed to Higgins, 546,401, September 17, 1895, Higgins, 642,329, January 30, 1900, Robeson, 833,634, October 16, 1906.

All the above patents are found in class 87-17.

The claims however are all rejected on the ground that they do not conform to the statutory requirement as to conciseness. See ex parte Chapman, 120 O. G. 2446.

WNH. Ely, Examiner.

[fol. 1011] Mail Room, Nov. 30, 1909, U. S. Patent Office

U. S. Patent Office, Received Dec. 1, 1909

Serial No. 460,737. A

Division 31, Paper No. 3 2

United States Patent Office

In re Application of Frank G. Perkins. Serial No. 460[473]*737. Filed Nov. 2, 1908. For Adhesives and Methods of Making the Same

49 Wall Street,
New York City, November 24, 1909.

Hon. Commissioner of Patents, Washington, D. C.

Sir: In response to the official action of December 12, 1908, please amend the above entitled application as follows:

[*Words and figures enclosed in brackets erased in copy.]

Page 2, line 21; change "sits" to "sets."
Page 5, line 7; correct the spelling of "cellulose."
Same page, line 10; correct the spelling of "colloids."
Same page, line 23; after "with" insert "the."
Page 7, next to the last line, after "use" insert

Per B1

A1. the following: "and has substantially all the physical qualities and characteristics of the best animal glue."

[Matter enclosed between rules erased in copy.]

Cancel claims 1, 3, 4, 6, 7, 11, 14, 15, 16, 17, 18, 19, 20, 22, 23, 24, 25, 28, 29, 32, 35, 37, 38, 39, 40, 41, 43, 44, 45, 46, 50 and 51 and adjust the ordinals of the remaining claims.

Insert the following Claims:

[Cls. 21 24]*

[fol. 1012] Sub. B2

A 2. 21. The improved process for making glue which consists in treating a starch with a reagent to lessen its water absorptive properties and then treating it with an alkaline solution to produce a glue which has substantially the same characteristics as the best animal glue.

22. The improved glue which consists of a starch base treated with a reagent to lessen its water absorptive properties and then dried and treated with an alkaline solution to form a glue, having substantially the same characteristics as the best animal glue.

23. The improved glue which consists of a starch base treated with an acid reagent to lessen its water absorptive property, then treated with a reagent to neutralize the free acid, then dried and treated with

[*Words and figures enclosed in brackets erased in copy.]

an alkaline solution to form a glue, having substantially the same characteristics as the best animal glue.

24. The improved glue which consists of a starch base treated with a reagent to lessen its water absorptive property, and with an alkaline Cl agent to for a glue which is fluent when cold and when it contains less than six parts by weight of water to one part of starch.

[Matter enclosed between rules erased in copy.]

Remarks

Many of the claims have been cancelled in order to comply with the examiner's requirements as to conciseness. Amendments have also been made to obviate the examiner's criticism in other respects.

The references cited by the examiner have been considered, but it is believed that they fail to show a process which will produce applicant's product. The product de- [fol. 1013] scribed in the references is a white unctuous paste, having none of the characteristics of animal glue. Applicant's process produces a product which has a light brown color and [floats]* flows like a liquid and has substantially all the characteristics of the best animal glue.

In view of the above, a re-consideration and favorable action on the merits is respectfully solicited.

Respectfully submitted.

Kenyon & Kenyon, Attorneys for Applicant.

[fol. 1014] 2—260

Div. 31, Room 169

Paper No. 3

Address only "The Commissioner of Patents, Washington, D. C." and not any official by name.

All communications respecting this application should give the serial number, date of filing, title of invention, and name of the applicant.

[*Words and figures enclosed in brackets erased in copy.]

Department of the Interior,
United States Patent Office,
MDE. Washington D. C., Dec. 16, 1909.
Mailed " " "

Frank G. Perkins, c/o Kenyon & Kenyon, 49 Wall Street, New York, N. Y.:

Please find below a communication from the Examiner in charge of [the]* your application [of]* No. 460,737, Adhesives and Method of Making the Same, filed November 2, 1908.

E. B. Moore, Commissioner of Patents.

This case has been reconsidered in view of the amendment of November 30, 1909.

Claims 22-24 are objectionable since they define the product by the process of making.

The former objection relating to the explanation of the action of the alkali on the cellulose as catalysis is repeated. Claim 25, based thereon, is rejected.

The British patent to Herzberg, of record, substantially anticipates applicant's process except the intermediate step of drying which is recited in certain claims. This step of drying if performed by the manufacturer is not seen to be of utility and if performed by the consumer does not confer patentability on the process. No true process is defined by [fol. 1015] reciting certain steps which are to be carried out by the manufacturer in his plant and certain other steps that are to be executed by the consumer before using the article. In view of the above all the claims, except claim 3, are rejected on Herzberg.

Claims 4, 5 and 9-20 are rejected on the British patent to Ekman, 8331 of 1901 (87-17).

Claims 11-14 are rejected on Higgins, 642,329, of record.

The British patent to Steiger, 8029 of 1890 (87-7, Vegetable), meets claims 4, 5, 9, 10 and 17.

Claim 3 may be allowed.

Ely, Examiner.

W. N. H.

[*Words and figures enclosed in brackets erased in copy.]

Mail Room, Aug. 15, 1910, U. S. Patent Office

Received Aug. 16, 1910

460,737

Division 31, Paper No. 4

United States Patent Office

In re Application of Frank G. Perkins. Serial No. 460,737. Filed November 2, 1908. For Adhesives and Methods of Making the Same

49 Wall Street, New York City, July 29, 1910.

Hon. Commisioner of Patents, Washington, D. C.

SIR: In response to the official action of December 16, 1909, please amend the above entitled application as follows:

Cancel pages 2, 3, 4, 5, 6, 7 and 8, and substitute the following:

[fol. 1016] My invention relates to improvements in adhesives and the method of making the same, and more particularly to the manufacture of adhesives or glue from carbohydrates and especially those containing cellulose.

In the well known method of making a "starch paste" the solid is mixed with water enough, to make, after "cooking up," a paste of such viscosity or density that it can be easily applied. This mixture is then subjected to heat to rupture or burst the cellulose walls and this cooking to a considerable degree reduces the cellulose to soluble B[1]. starch. To increase the adhesive power small amounts of alkali have been added prior to heating, which, to a slight degree put into suspension or solution a portion of the cellulose, thereby forming a binder or tie in the paste. The progressive action of the alkali, however, greatly increased by heat, and itself increasing the reducing effect of the heat by mutual action, very soon injures the adhesive power by its transforming the original valuable cellulose element into soluble starch and finally into sugar.

This chemical change causes the paste to loose its "tack" or tenacity and its tendency to set and dry and sets up fermentative destruction. Just in the degree that this chemical change progresses so the value of the adhesive is impaired. The paste in cooling also becomes thick and jelly-like and practically impossible to apply and use when originally made with considerable water, or diluted after cooking. If more water is added in an attempt to make it more fluid the paste becomes so weak and diluted that it has practically no power and would be wholly unfit for most classes of work.

Sub C[1].

Various objects of my invention are to provide a glue and a method of making the same from carbohydrates, [fol. 1017] which will not have the disadvantages just pointed out, but which will be exceptionally tenacious and powerful, but still amply fluid for easy application, and which can be economically and easily produced.

A further object of my invention is to produce an adhesive which will have the great practical advantage that it may be worked up with the same proportions of water as are now employed in the use of animal glue, thus being usable under the same working or factory conditions hitherto employed for animal glues. As far as I am aware, such conditions have never been met by any prior adhesive made from a carbohydrate base. A further important object of my invention is to produce an adhesive or glue which may be sold in a dry state and which may then be prepared for use by mixing up with or without the use of heat. Such improvements are of great practical and industrial advantage and importance and have been much sought.

To do this I first take a carbohydrate of the proper kind, and treat it with a reagent to decrease its water absorptive properties so that in order to render fluid the finished glue, comparatively little water will have to be added and the final glue will not thereby become seriously diluted. As a base I prefer to use the carbohydrate secreted by the cassava plant. After being treated as above, the dried material may be mixed with a small amount of water and with a caustic alkali and a glue produced which is exceptionally powerful and which is very stable in its physical condition, so much so, that it may be kept for days or even weeks after it has been made into a liquid state without *d*ermentative

change. By my process the glue is free from the complica-
[fol. 1018] tions which attend the use of an adhesive which must be cooked or warmed before use, or kept warm during use, and is vastly more powerful than that which results from the treatment of starch by heat, which only to a limited degree can obtain the benefit of the great tenacity of the cellulose, and is exceedingly liable to "souring" or fermentative changes.

Further objects, advantages and features will more clearly appear from the detail description given below.

In carrying out one embodiment of my invention I take the cassava carbohydrate or flour in dry form and add an equal weight of water. The batch is then agitated and heated to about 130° F. Then I slowly add from 2% to 3% of strong sulphuric acid, the mass being kept in continual agitation. The agitation is continued for from four to six hours after the acid has been added and then the acid may be neutralized by the addition of a small amount of caustic soda or similar alkali. The acid acts upon the starch or carbohydrate to decrease its water absorptive properties and this action is aided by the heat. However, great care must be exercised to not have the heat sufficient nor the amount of acid great enough to put the starch or carbohydrate in solution. If the action of the acid and heat is carried too far the starch will be changed into dextrine or soluble starch and go into solution and as such it could not be made to have practically any of the advantages of my product. I find that if the mixture is boiled or if much more than 3% of acid or much more than 130° F. of temperature is used more or less of the carbohydrate will go into solution. Once c[illegible]nged into dextrine the batch would come out more like lard and would be what is known as
[fol. 1019] "short" and would have practically no tenacity as compared with my improved product. This is one important difference between my improved process and product and products hitherto made from starch and known as pastes and mucilage.

That the starch in my improved process does not go into solution under the action of the acid is shown by its settling upon stopping the agitation. Sulphuric and other acids are known to have considerable power as oxidizing agents and I believe that it is by such an action that the acid acts

upon the granulose in the starch to decrease its water absorptive properties. The amount of alkali used is only enough to neutralize the acid. After this has been added the batch is then cooled, drained and dried and packed in dry form until ready for use.

I find that the carbohydrate secreted by the cassava plant and known as cassava flour has many advantages over other starches or starchy products and prefer its use. Other starchy products from the cassava plant are found to be more or less adaptable and even other starchy products may be used with some little success but they do not produce glues so tenacious and are otherwise more or less undesirable. Some are effected by impurities. Potato starch and some others are found to produce a product having more or less the consistency of lard and are termed "short" and are lacking in tenacity.

The above forms the first part of my improved process and the various steps therein may all be carried out at the factory. In commercial use I preferably ship the dry material, obtained as above, to the consumer, who carries out the second part of the process at the place where the glue is to be used, but if desired the first and second parts of my improved process may be carried out together.

[fol. 1020] In carrying out the remaining steps in the preparation of my improved glue, the dried base, obtained as above, is mixed with from two to three parts, by weight, of water, according to the strength of the joint and economy desired. A liquid suspension is thereby formed which is agitated and treated at about 170° F. with a solvent of cellulose, as for example, an aqueous solution of caustic soda or potash, using from six to ten per cent of the weight of the dry base, of dry alkali. The alkali acts upon the starch to change its properties so that it has those of the animal glue. In doing this it does what is known as "bursting" the starch and, I believe, it acts catalytically to put the cellulose of the carbohydrate into solution, although the solution may be merely colloidal, and in using the term "solution" I consider it broad enough to embrace celloids. The alkali is best added in the form of a solution of from 33% to 50% strength. Sodium and potassium hydrates are the most available and among the most powerful of the

known solvents of cellulose and are well adapted for the purposes in question.

As previously stated when ordinary starch is heated with water it is capable of absorbing enormous quantities of water and if mixed with two or three parts of water becomes of a stiff jelly-like form which must be very much diluted before it will be practically workable. I find, however, that by treatment with sulphuric acid or other reagents without dissolving this water absorbing power can be regulated and greatly reduced and the jelly effect be prevented, although mixed under the same conditions and with the same proportions which in an untreated starch would produce the previously described unworkable jelly. This I [fol. 1021] believe is due to the action of the acid upon the granulose in the starch with which the acid so reacts that the granulose will no longer absorb the large amounts of water as before. This substantially reduces the absorption of water by the starch and prevents it from becoming jelly-like and tough when afterward treated with the alkali. The carbohydrate thus changed is dried and may be then put on the market in dry form. In this case the last part of the process would be preferably carried out by the consumer. However, if desired, both parts of the process may be carried out by the manufacturer, or by the consumer, or in any other manner desired.

In the second part of my improved process, only from one to three parts of water by weight to one part of the dry material are used and after adding the solvent it is found that even with such a small amount of water, the batch will assume a fluid consistency and will not become jelly-like and tough as in former processes. The alkali added acts to dissolve more or less of the cellulose, thereby forming an adhesive of very tenacious properties. The dry carbohydrate is mixed with the water without heat, although it may be used but to a slight degree only, if desired. By the preliminary treatment in reducing the water absorbing power of the carbohydrate, a very concentrated mixture of the adhesive and water may be obtained.

I believe that the cause of the tenacious properties when carbohydrates are treated with water and a strong solution of an alkali may be traced to the catalytic action of the

alkali and that the amount of tenacity produced depends upon the amount of cellulose made available to act as a bond or tie. Consequently I believe that to obtain the best [fol. 1022] results it is necessary to abstain from reducing the cellulose to soluble starch or dextrine, and that sufficient cellulose must be left to make the glue amply tenacious. Therefore, the action of the acid and alkali should not be carried so far nor the temperature too high as to destroy the cellulose or impair its strength by changing it into soluble starch and the starch into sugar or dextrine.

In actual practice I have found that the best adhesive is produced by treating the base with the chemicals to reduce the water absorbing power to a point where the base if mixed with from 2 to 3 parts of water and subjected to heat of 170° F. would result in a syrupy condition instead of a thick jelly-like mass as would occur in an untreated base, so tested.

I find that by such suitable treatment under my process it is possible to produce from the base long filaments having superior strength to similar threads of animal glue. The diluted mixtures of pastes hitherto made from the natural carbohydrates in the manner explained before are wholly unfit for most classes of work since they contain so much water that it takes the joints very long to dry and when they do become dry there is so little material left that only a very weak bond is obtained. Thus it is of greatest importance and value to produce a concentrated glue solution ready for application, which parallels the animal glue solutions now employed industrially, in respect to water contents as well as strength. Practically all the water must be later removed that goes into the glue solution and is applied to the joints, hence an increase of water in the glue solution involves changes in drying methods or in drying time, or in risks of injury to the material due to warping by the extra water, all of very serious consequence.

[fol. 1023] My improved glue is transparent and free from odor, and is very stable after mixing for use and has substantially all the physical qualities and characteristics of the best animal glue. Although, in the final glue the cellulose is dissolved in the caustic, the cellulose is still in such a condition that it is insoluble in water. Such a glue will, therefore, produce joints which are practically

insoluble in water and which are unaffected by steam or other moisture. These features make my glue especially advantageous for purposes in which other glues are practically useless.

Although I have described my improvements in great detail and with much particularly and have mentioned particular compounds which I prefer to use, I desire it to be understood that I do not limit myself to such details and compounds, as many substitutes may be found, but having fully and clearly described my invention, what I claim and desire to secure by Letters Patent, is:

[Matter enclosed between rules erased in copy.]

Rewrite claims as follows:

---

1. The improved process for making adhesives which consists in treating cassava carbohydrate with substantially an equal weight of water, heating the same to about 130° F., adding from 2% to 3% by weight of an acid, slowly, and during agitation, neutralizing the batch with an alkali after from 4 to 6 hours agitation, then cooling and drying the batch, then adding from 2 to 3 parts by weight of water, and then while being agitated treating the same with a solution of a caustic alkali using 6% to 10% by weight of the dry alkali.

2. In the making of adhesives, treating cassava flour with substantially an equal weight of water, heating the [fol. 1024] same to about 130° F. and adding from 2% to 3% by weight of strong sulphuric acid slowly and with agitation, without rendering the flour soluble in water, then neutralizing the acid with an alkali after from 4 to 6 hours agitation, then cooling and drying the batch, then adding from 2 to 3 parts by weight of water and then while being agitated treating the same with a solution of caustic alkali using 6% to 10% by weight of the dry alkali.

B 2.

3. In the making of adhesives, treating cassava starch with a suitable amount of water, heating the same and adding sulphuric acid to decrease its water absorptive

properties of the starch but without rendering the starch materially soluble in water, then neutralizing the acid and drying the batch, then treating the dried material with water and caustic alkali to form a glue.

4. In the making of adhesives, treating cassava flour with substantially an equal weight of water, heating the same to about 130° F. and adding from 2% to 3% by weight of strong sulphuric acid slowly and with agitation, without rendering the flour soluble in water, then neutralizing the acid with an alkali after from 4 to 6 hours agitation.

5. In the making of adhesives treating cassava starch with a suitable amount of water, heating the same and adding sulphuric acid to decrease its water absorptive properties of the starch but without rendering the starch materially soluble in water, then neutralizing the acid.

6. In the making of adhesives, treating a starchy material insoluble in water with substantially an equal weight of water, heating the same to about 130° F. and adding from 2% to 3% by weight of a strong acid without rendering the flour materially soluble in water, then neutralizing the acid, then cooling and drying the batch [fol. 1025] and adding from 2 to 3 parts by weight of water and treating the same with a solvent of cellulose to burst the starch.

7. In the making of adhesives, treating a starchy material insoluble in water with substantially and equal weight of water, heating the same to about 130° F. and adding from 2% to 3% by weight of a strong acid without rendering the flour materially soluble in water then neutralizing the acid.

8. In the making of adhesives, treating a suitable carbohydrate insoluble in water with water and an acid to decrease its water absorptive properties but without rendering the carbohydrate materially soluble in water, then neutralizing the acid and allowing the batch to dry, then treating the same with water and a solvent of cellulose such as caustic alkali.

9. In the making of adhesives, treating a suitable carbohydrate insoluble in water with water and an acid to de-

crease its water absorptive properties but without rendering the carbohydrate materially soluble in water, then neutralizing the acid.

10. In the making of adhesives, treating a suitable starchy product with water and an acid to decrease its water absorptive properties but without rendering the starch materially soluble in water, then neutralizing the acid and treating the same with a solvent of cellulose to form a glue having substantially the properties of animal glue.

11. In the making of adhesives, treating a carbohydrate insoluble in water with water and a reagent to decrease its water absorptive properties without rendering it materially soluble in water.

12. In the making of adhesives, treating a carbohydrate insoluble in water with water and a reagent to decrease [fol. 1026] its water absorptive properties without rendering it materially soluble in water, then treating the batch with a solvent of cellulose to form a glue having substantially the properties of a good animal glue.

13. In the making of adhesives, treating a carbohydrate insoluble in water with water and an acid to decrease its water absorptive properties without rendering it materially soluble in water.

14. In the making of adhesives, treating a suitable starchy product with water and a reagent to decrease its water absorptive properties but without rendering the starch materially soluble in water, then neutralizing the reagent and treating the same with a solvent of cellulose to form a glue having substantially the properties of animal glue.

15. In the making of adhesives, treating cassava flour with an acid to decrease its water absorptive properties without rendering it materially soluble in water.

16. In the making of adhesives, treating cassava flour with a reagent to decrease its water absorptive properties without rendering it materially soluble in water.

17. In the making of adhesives, treating a carbohydrate insoluble in water with water and a reagent to decrease

its water absorptive properties without rendering it materially soluble in water, then treating the same with a base to increase its adhesive properties.

18. In the making of adhesives, treating a suitable starchy product with water and an acid to decrease its water absorptive properties but without rendering the starch materially soluble in water, then treating the same with a reagent to increase its adhesive properties.

19. In the making of adhesives, treating a suitable car- [fol. 1027] bohydrate with a reagent to increase its adhesive properties without rendering it soluble in water, to produce a glue having substantially the properties of animal glue.

20. In the making of adhesives, treating a suitable starchy product insoluble in water with a solvent of cellulose to burst the starch without rendering it soluble in water, to produce a glue having substantially the properties of an animal glue.

21. In the making of adhesives, treating a suitable starchy product insoluble in water with a caustic alkali and heat to burst the starch without rendering it soluble in water, to produce a glue having substantially the properties of an animal glue.

22. In the making of adhesives, treating cassava carbohydrate insoluble in water with a solvent of cellulose to burst the starch without rendering it soluble in water, to produce a glue having substantially the properties of an animal glue.

23. In the making of adhesives, treating a suitable starchy product insoluble in water with a base and heat at about 170° F. to burst the starch without rendering it soluble in water.

24. In the making of adhesives, treating a suitable starchy product with from 2 to 3 parts by weight of water and adding a solution of a caustic alkali using 6% to 10% by weight of the alkali to burst the starch without rendering it soluble in water, to produce a glue having substantially the properties of an animal glue.

25. A glue having a carbohydrate base, substantially insoluble in water and having substantially the properties of an animal glue.

26. A glue containing a starchy product as a base and its cellulose, and a solvent of cellulose, the starch being in a form insoluble in water.

[fol. 1028] 27. A glue containing starch as a base and a caustic alkali, the glue being insoluble in water and having substantially the properties of an animal glue.

28. A glue containing cassava carbohydrate as a base and a caustic alkali, the glue being insoluble in water and having substantially the properties of an animal glue.

29. In the making of adhesives, the treating of a carbohydrate with acid to lessen its water absorptive properties and then with a reagent to increase its adhesive properties.

30. In the making of adhesives, the treating of cassava below 130° F. with 200% to 300% by weight of an acid neutralizing the acid and treating the starch with caustic using 60% to 100% of dry alkali.

31. The treating of starch with less than 10% by weight of strong acid and then treating it with a reagent to increase its adhesive proportions.

32. The improved glue base which consists of a dry starchy material insoluble in water and capable of being changed with a flowing solution by the addition of from 2 to 3 parts by weight of water containing a solvent of cellulose.

33. The improved adhesive which consists of dissolved starch substantially insoluble in water.

34. The improved glue which consists of starchy material insoluble in water and a solvent of cellulose.

35. The improved glue which consists of cassava flour insoluble in water and caustic alkali.

36. An adhesive which is fluent when cold composed of starchy matter insoluble in water, a solvent of cellulose and less than 7 parts by weight of water.

[fol. 1029] 37. In the making of adhesives, treating a suitable carbohydrate with an oxidizing agent and water without rendering the carbohydrate materially soluble in water, to decrease the water absorptive properties of the carbohydrate.

38. In the making of adhesives, treating a suitable carbohydrate with an oxidizing agent and water without rendering the carbohydrate materially soluble in water, to decrease the water absorptive properties of the carbohydrate and then treating the carbohydrate with a solvent of cellulose to increase its adhesive properties without rendering it soluble in water.

39. In the making of adhesives, treating a starchy product substantially insoluble in water with an oxidizing agent and water to decrease its water absorptive properties without rendering it soluble in water, and also treating it with an alkali to increase its adhesive properties without rendering it soluble in water.

[Matter enclosed between rules erased in copy.]

Remarks

The specification has been rewritten in order to avoid confusion in the amendments and to bring all the parts of the case in proper relation. It will be found, however, that the new specification is largely a copy from the old. Applicant has now finished a large number of experiments with his process and product, and has more carefully considered the various references cited by the Examiner and finds that his invention is not found in any of them. Applicant finds by experiment that if the starch which at the beginning is insoluble in water, is treated in any way so that it is changed into dextrine or soluble starch, or so that it becomes soluble in water, an entirely different product is produced which does not have the tenacity or qualities of ap-
[fol. 1030] plicant's improved product. Applicant has shown that his starch does not become soluble upon treatment by the first step because it settles to the bottom as insoluble matter. Applicant has found that if the heat be

too high or the acid too strong or the process continued for too long a time that the starch may be rendered soluble and if this is done the resulting product is entirely different from applicant's, and in fact is not suitable for the purposes for which applicant's product is designed. The caustic added in the first step of applicant's process is not added in sufficient quantities to cause the starch or cellulose to go into solution but merely in such quantities as is sufficient to neutralize the acid. In the second step of the process a starch or cellulose is put into the solution by the caustic but it is not thereby rendered soluble in water as dextrine or soluble starch would be.

On further consideration of the various references it is found that all of them specify the treatment of starch to render it soluble in water, such as; dextrine, soluble starch or the like. Applicant has therefore rewritten the claims to carefully distinguish his invention from the references cited by specifying that the process should not be carried so far or with enough heat or acid to render the insoluble starch soluble in water and specifying that the resulting product is substantially insoluble in water.

We will now take up the various patents cited by the Examiner.

The British patent, No. 8029 of 1890 to Steiger, describes the boiling of glutinous substances with a suitable acid. Applicant has found by experiment that if starch is thus boiled with an acid it will become soluble and be dissolved. Fur- [fol. 1031] thermore, we may state that he uses glutinous substances and that there is substantially no gluten in cassava flour and that gluten in applicant's process is undesirable since it sets up fermentation which breaks the body of the starch down. Furthermore it will appear that the starch as used in this patent is undesirable since it specifies that it shall be washed out. This patent merely describes one of the many processes for making mucilage or paste as distinguished from glue. In the making of mucilage or paste from starchy products it is this has been done by rendering the same soluble. Applicant does not do this.

British patent, No. 8331 of 1901 to Ekman describes a similar process and specifies that the starch is put into solution by the acid. This changes the starch into dextrine or

soluble starch which applicant does not do as specified in his claims.

The British patent, No. 12,326 of 1897 to Herzberg also describes a similar process and clearly specifies that the starch is placed into acidulated water when it is perfectly dissolved. After this action only enough caustic is added to neutralize the acid. In this connection it is noted that potato starch which this patent specifies does not have the advantages of cassava since potato shows the tendency to become lardy or "short," that is it will not string out and has little tenacity. This patent similarly describes another of the well known methods of changing starch into dextrine or soluble starch to make mucilage. The product, however, will not begin to have the tenacity or qualities of good animal glue which applicant's product does have.

The British patent, No. 22,685 of 1891 to Higgins describes a more complex process and product but which is [fol. 1032] nevertheless of the same nature. It starts off by specifying that the water is brought to a boiling point and this in itself is a material difference from applicant's process since boiling would render the starch soluble. Moreover it specifies the use of dextrine which is in itself soluble and therefore the starchy material is not only soluble to begin with but the resultant product is also soluble in water.

The United States patent to Robeson relates to the process of treating waste sulfite liquors. It does not specify the treatment of starch without rendering it soluble to produce an adhesive as claimed by applicant.

The United States Patent to Higgins, No. 642,329, also falls in line with the above. It specifies that the starch be digested in hot water and impregnated with acid and this digestion continued until the starch is converted into dextrine. This is further than applicant goes because applicant does not want to convert the starch into dextrine as it would thus be rendered soluble. Moreover, the resulting product of the patent is a dextrine paste of white color while applicant's product is materially distinguished therefrom by having the properties of animal glue and being of a darker or amber color. The temperature used by Higgins is too high. A high temperature alone would dissolve the starch which applicant does not desire to do.

The United States patent to Higgins No. 546,401 is observed in a similar manner. This also specifies the use of white dextrine which is soluble in water. On page 2, lines 7 and 8, it is specified that the white dextrine is dissolved in warm water. By putting the dextrine or starch in a solution it is rendered useless for applicant's process and product.

[fol. 1033] From a consideration of the above it will appear that applicant's treatment is broadly new. No one seems to have ever before produced a glue from starch without rendering the starch soluble in water. By doing this applicant renders the resulting product more tenacious and also obtains a product which is insoluble in water and therefore adapted to be used in wet places. Applicant's process and product is not to be compared with those heretofore known and which are designed to make mucilage or paste which is soluble in water, from starch by rendering the starch soluble in water. Furthermore applicant seems to be the first to conceive that a glue having the qualities of good animal glue could be produced by treating the starchy product insoluble in water with an alkali or equivalent, to burst the starch and render it extremely adhesive. While it is old to treat soluble starches and dextrine with caustic in the manufacture of adhesives, applicant is the first to conceive that an insoluble starch may be treated with caustic to obtain a product entirely different from that otherwise obtained which is more tenacious and has the properties of animal glue as distinguished from those of the ordinary mucilage and white unctuous paste.

We do not fully understand the Examiner's statement "that this step of drying if performed by the manufacturer is not seen to be of utility and if performed by the consumer does not confer patentability on the process. No true process is defined by reciting certain steps which are to be carried out by the manufacturer in his plant and certain other steps that are to be executed by the consumer before using the article." It would seem to us that this step of drying is a most important and useful one since it allows the [fol. 1034] product to be put into a shape into which it can be conveniently shipped. Furthermore, whether or not the steps are carried out one immediately after the other at the

same place or at different places after the elapse of time, it does not seem that this can in any way detract from the utility or novelty of the process. We know of no decision so holding.

Former claim 2 which was allowed has been rewritten as claim 1.

We believe we have clearly pointed out that each of the new claims is clearly patentable over the references cited and in view of the above a reconsideration and favorable action upon the case is earnestly solicited.

Respectfully submitted.
Kenyon & Kenyon, Attorneys for Applicant.

[fol. 1035] 2—260

Div. 31, Room 169

Paper No. 5

Address only "The Commissioner of Patents, Washington, D. C.," and not any official by name.

All communications respecting this application should give the serial number, date of filing, title of invention, and name of the applicant.

Department of the Interior,
United States Patent Office,
Washington, Sep. 20, 1910.
Mailed " " "

Frank G. Perkins, Care Kenyon & Kenyon, 49 Wall St., New York, N. Y.:

Please find below a communication from the Examiner in charge of the your application, of No. 460737, Adhesives and Method of Making the same, filed Nov. 2, 1908.

E. B. Moore, Commissioner of Patents.

This case has been reconsidered in view of the amendment of August 15, 1910.

The following errors were noted in the substitute specification: Page 4, line 1, the third word should be fermentative. On page 6, line 3 from the bottom, the expression "without dissolving" should be cancelled. Page 4, line 20,

the comma before "absorptive" should be cancelled. In claim 30, the percentages of acid and alkali are incorrectly stated.

When starch is treated with a small percentage of acid the granulose is dissolved out, leaving the amylo-cellulose intact, and treatment with water changes part of the starch cellulose into soluble starch leaving a part which obstinately [fol. 1036] resists the action of water and is readily dissolved by dilute alkali. The above statement condensed from Allen's Commercial Organic Analysis, Vol. 1, London, J. & A. Churchill, 7 Great Marlborough St. N., 1898, page 405, paragraph, Structure of Starch Corpuscles, discloses that starch is hydrolyzed by the action of small quantities of acid but gives no basis for the statement found in the specification, and claims that small quantities of acid decrease the water absorptive properties of cassava or similar carbohydrates. Further, the specification furnishes no evidence that the applicants' process has decreased the water absorptive properties of the carbohydrate used. Neither does the specification supply conclusive evidence that the granulose, and therefore the starch, has not gone into solution. Since the settling upon stopping the agitation," referred to on page 5, line 8, of the specification, presumably arises either from the sedimentation of the unattached granulose or the amylo-cellulose or may be due to the combined action of these elements, only careful quantitative experiments could determine whether or not part of the granulose has gone into solution as a result of applicant's process.

Sulphuric acid is under certain conditions an oxidizing agent but the examiner knows of no authority for the theory advanced in the first full paragraph of page 5, that sulphuric acid acts as an oxidizing agent upon granulose and so decreases its water absorptive properties. Further, the specification furnishes no substantial ground for such a theory. Neither does it for the theory later advanced that the alkali acts on the cellulose as a catalyst.

Claims 37 and 39, based upon the sulphuric acid theory, are untenable.

[fol. 1037] Claim 33 is contradictory, since "dissolved starch" without qualification means starch dissolved in water and the statement next following is that the starch is substantially insoluble in water.

Claims 11 to 14, 16, 17, 19, 20, 22 and 25 are wholly indefinite.

Claims 26 to 28 and 34 to 36 are inaccurate, since the caustic alkali will react upon the constituents of the carbohydrate and the final product will no longer be made up of the constituent ingredients as claimed.

Action on the merits of the claims is deferred pending the filing of satisfactory evidence that the water absorptive properties of the carbohydrate treated have been decreased, and also of data of quantitative experiments establishing the fact that the starch of the carbohydrate when treated by applicant's process does not go into solution, as stated in the second full paragraph of page 5 of the specification.

Ely, Examiner.

W. N. H.

[fol. 1038] Mail Room, Sep. 24, 1910, U. S. Patent Office

Docket Clerk, Sep. 24, 1910, U. S. Patent Office

460,737-6

United States Patent Office

In re Application of Frank G. Perkins. Serial No. 460,737. Filed Nov. 2, 1908. For Improvements in Adhesives and Method of Making the Same

Hon. Commissioner of Patents, Washington, D. C.:

Whereas, an application for patent for Improvements in Adhesives and Method of Making the Same was filed on or about November 2, 1908, Serial No. 460,737, by Frank G. Perkins, deceased, late citizen of the United States, and a resident of South Bend, County of St. Joseph and State of Indiana;

Your petitioner, Gertrude S. Perkins, a citizen of the United States and a resident of South Bend, in the County of St. Joseph and State of Indiana, and whose post office address is Dean Building, South Bend, Indiana, Executrix of the last will and testament of the said Frank G. Perkins, deceased (as by reference to the certificate hereto annexed, will more fully appear) prays that the Letters Patent may be granted to her, as Executrix, for the said Improvements

in adhesives and Method of Making the Same, set forth in the specification of said application; and your petitioner hereby appoints the firm of Kenyon & Kenyon (Registered No. 2570), composed of Wm. Houston Kenyon, Alan D. Kenyon, Robert N. Kenyon and Richard Eyre, of 49 Wall Street, New York City, attorneys, with full power of sub- [fol. 1039] stitution and revocation, to prosecute said application, to make alterations and amendments therein, to sign drawings, to receive the patent, and to transact all business in the Patent Office connected therewith.

Signed at South Bend, Ind., this 21st day of Sept. 1910.

Gertrude S. Perkins, Executrix of the Last Will and Testament of Frank G. Perkins.

[fol. 1040] 2-260

Div. 31, Room 169

Paper No. —.

Address only "The Commissioner of Patents, Washington, D. C." and not any official by name.

All communications respecting this application should give the serial number, date of filing, title of invention, and name of the applicant.

Department of the Interior,
United States Patent Office,
Washington, Jan. 6, 1911.

Mailed " " "

Frank G. Perkins, Care Kenyon & Kenyon, 49 Wall St., New York, N. Y.:

Please find below a communication from the Examiner in charge of [the]* your application [of]* No. 460,737, Adhesives and Method of Making the same, filed Nov. 2, 1908.

E. B. Moore, Commissioner of Patents.

This case has been reconsidered in connection with the amendment of Dec. 14, 1910.

The insertion which the last amendment directed to be made after "obviated" in the next to the last line of page

[*Words and figures enclosed in brackets erased in copy.]

3, has not been entered, since the designated word could not be found.

The above referred to insertion does not constitute the evidence called for in the last paragraph of the last office letter. Accordingly it is held that the amendment was not fully responsive to that letter and further action on the merits of the claims is deferred until the requirements of the paragraph referred to are complied with.

Ely, Examiner.

W. W. H.

[fol. 1041] Mail Room, Jan. 12, 1911, U. S. Patent Office

U. S. Patent Office, Received Jan. 13, 1911

Serial No. 460,737

Division 31, Paper No. 9

Letter

United States Patent Office

In re Application of Frank G. Perkins. Serial No. 460,737. Filed Nov. 2, 1908. For Adhesives and Methods of Making the Same

49 Wall Street,
New York, N. Y., January 11, 1911.

Hon. Commissioner of Patents, Washington, D. C.

Sir: We duly received an official action on the part of the Patent Office, entitled in the above case and dated January 6, 1911. The action states that the case has been reconsidered in connection with the amendment of December 14, 1910. Applicant's attorneys desire to state that no amendment was filed in this case on or about December 14, 1910, but that an amendment was filed in applicant's co-pending case, No. 460,738, on or about December 14, 1910, which amendment, it is believed, has been entered by the Office in this case when it should have been entered in the co-pending case.

Will the Examiner kindly let us know if this is the case, and if so, what action he takes in the matter.

Respectfully submitted.

Kenyon & Kenyon, Attorneys for Applicant.

[fol. 1042] 2-260

Div. 31, Room 169

Paper No. 10

Address only "The Commissioner of Patents, Washington, D. C." and not any official by name.

All communications respecting this application should give the serial number, date of filing, title of invention, and name of the applicant.

Department of the Interior,
United States Patent Office,
Washington, Jan. 17, 1910.
Mailed " " "

Frank G. Perkins, care Kenyon & Kenyon, 49 Wall St., New York, N. Y.:

Please find below a communication from the Examiner in charge of [the]* your application [of]* No. 460,737, Adhesives and Method of Making the Same, filed Nov. 2, 1908.

E. B. Moore, Commissioner of Patents.

This case has been reconsidered in connection with the letter of Jan. 12, 1911.

The amendment to applicant's co-pending application 460,738, received in the office Dec. 14, 1910, and inadvertently entered in the present application, concerning which office letter of Jan. 6, 1911, was written, has been transferred to the said application. This application awaits action in response to office letter of Sep. 20, 1910.

Ely, Examiner.

W. W. H.

[*Words and figures enclosed in brackets erased in copy.]

[fol. 1043] Application Room, Apr. 6, 1911, U. S. Patent Office

U. S. Patent Office, Received Apr. 7, 1911

Division 31, Paper No. 11

Serial No. 460,737

C. & Affidavit

United States Patent Office

In re Application of Frank G. Perkins. Ser. No. 460,737. Filed Nov. 2, 1908. For Adhesives and Method of Making the Same

49 Wall Street,
New York, N. Y., April 4, 1911.

Hon. Commissioner of Patents, Washington, D. C.

Sir: In response to the official actions of September 20, 1910 and January 17, 1911, please amend the above entitled application as follows:

Substitute the following specification and claims for the specifications and claims now in the case.

C' My invention relates to improvements Per D. in [adhesives]* glue and the method of making the same and more particularly Per D. to the manufacture of [adhesives or]* Per D. glue from carbohydrates [and especially those]* containing amylo cellulose [or its equivalent]*.

5 In the well known method of making a "starch paste" the solid is mixed with water enough, to make, after tumifying, a paste of such viscosity or density that it can be easily applied. This mixture is then subjected to heat to rupture or burst the cellulose walls and this cooking to a considerable

[*Words and figures enclosed in brackets erased in copy.]

Per D. degree *supposedly* reduces the cellulose to soluble starch, particularly in the presence [fol. 1044] of soluble starch already in solution. To increase the body or viscosity small amounts of ammonia have been added prior to *or after* heating. Such pastes have not the necessary *relative* "tack," [or]* viscosity *cohesiveness* and tenacity to spread and adhere properly when applied as wood glues. [Such a paste is described in U. S. Patent to Higgins 579,827,]* Such pastes in cooling also become *extremely* thick and jelly-like and are practically unsatisfactory for woodwork when originally made with water, or diluted after cooking, because water warps *the wood* and delays drying and the pastes do not set hard enough *and are not dense and elastic enough when dry.* If more water is added in an attempt to make it more fluid, the paste becomes so weak and diluted that it has practically no power and would be wholly unfit for most classes of work, especially wood joints.

Per D.
Per D.
Per D.
Per D.
Per D.
Per D.

Various objects of my invention are to provide a glue and a method of making the same from carbohydrates, which will not have the disadvantages just pointed out, but which will be exceptionally tenacious and powerful but still amply fluid for easy application, and which can be economically and easily produced.

A further object of my invention is to produce a[n]* *glue* [adhesive]* which will have the great practical advantage that it may be practically used for the same purposes as the best *animal* [wood]* glue, and possess certain great advantages of permanency to weather and temperature variations far superior to those of animal glue. As far as I am aware, such conditions have never been met

Per D.
Per D.
Per D.

[*Words and figures enclosed in brackets erased in copy.]

by any prior adhesive made from a carbohydrate base. A further important *object* of my invention is to produce an adhesive or glue base which may [fol. 1045] be stored or sold in a dry state and which may then be prepared for use by mixing up with or without the use of heat. Such improvements are of great practical and industrial advantage and importance and have been much sought.

To do this I first take a carbohydrate of the proper kind, and treat it with a reagent to decrease its water absorptive properties in the sense that to render fluid the finished glue, comparatively little water will have to be added and the final glue will not thereby become seriously diluted. [Another way of

Per D. expressing.]* The effect of this

Insert H'. treatment is also that it decreases the

Per D. viscosity of the glue produced with a given amount of water without detriment to its "tack," quick adhesive properties and cohesion. As a base I

Per H. prefer to use the [carbohydrate]* *starch* secreted by the cassava plant, which has peculiar properties and advantages for this purpose. After being treated as above, the dried material may be mixed with a small amount of water and with a solvent of amylo-cellulose, such as caustic alkali, and a glue produced the strength of which when dry is superior to the lateral

Per D. strength of [the]* wood fiber. [and] which]* *The prepared* glue is very stable in its physical condition, so much so, that it may be kept for days or even weeks after it has been mixed for application without fermentative change. By my

Per D. process *in its preferred form* the glue is free from the complications which attend the use of an adhesive which must be cooked or warmed before use, or kept warm during use, and is more powerful than that which results from the treatment of starch in other ways. My improved glue

[*Words and figures enclosed in brackets erased in copy.]

when made in its best form and properly applied will not only tear away the wood at some point in the [fol. 1046] wood joint produced by the use*d* of this glue, but will tear away the wood at many points whether with or against the grain.

Further objects, advantages and features will more clearly appear from the detailed description given below.

In carrying out one embodiment of my invention I take the cassava carbohydrate or flour in dry form and add at least an equal weight of water. The batch is then agitated and heated to about Per E. 130° F. *which is below the bursting temperature of the starch.* Then I slowly add from 2% to 3% by weight (of the raw carbohydrate) of strong sulphuric acid. This may be considerably diluted if desired before it is added. The same is kept in continual agitation. The agitation preferably produced by thorough stirring is continued for from four to six hours after the acid has been added and then the acid may be neutralized by the addition of a small amount of caustic soda or similar alkali. The acid acts upon the starch or carbohyrate to decrease its water absorptive properties. As the acid appears to remain unchanged in the batch, until neutralized, I believe it acts catalytically to change the molecular condition of the carbohydrate without rendering it substantially soluble in the water. However, great care must be exercised not to have the heat sufficient or the acid in such quantity as to put the starch or carbohydrate in solution. If the action of the acid and heat is carried too far the starch will be changed Per H. [into soluble starch or]* into dextrine, Per H. and will go into solution [to a very material extent if not altogether,]* and as such it would be lost to my process, as I utilize only the suspended material. Even this would cease to have the [fol. 1047] desired properties if the action were carried too far.

[*Words and figures enclosed in brackets erased in copy.]
[Words in italic in bold-face type in copy.]

That a large part, if not all, of the starch does not, in my improved process, go into solution, is shown by its settling upon stopping the agitation and by the weight and analysis of the product yielded. *The batch therefore has not been converted into dextrin.* Sulphuric and other acids *as well as other starch converting agents* are stated to have a catalytic action affecting the molecular state of amylose or its state of hydration. This I believe to be promoted and equalized by prolonged agitation both together with the action of heat, removing constituents or destroying states of aggregation or polymerization, which are detrimental to the use of the carbohydrate as a glue base. The amount of alkali used is only enough to neutralize the acid. After this has been added, the batch is then cooled, drained and dried and kept in dry form until ready for use.

Per H.

Per H.

I find that the carbohydrate secreted by the cassava plant and known as cassava flour has many advantages over other starches *and* [or]* starchy products and prefer its use *but such other starches or starchy products may be used with more or less success.* Other starchy products from the cassava plant are found to be more or less adaptable and even other starchy products may be used with some little success but they do not produce glues so tenacious and are otherwise more or less undesirable. Some are affected by impurities.

Per H.

Per H.

The above forms the first part of my improved process and the various steps therein may all be carried out at the factory. In commercial use I preferably ship the dry material, obtained as above, to the consumer who carries out the second part of the [fol. 1048] process at the place where the glue is to be used, but if desired the first and second parts of my improved process may be carried out together.

[*Words and figures enclosed in brackets erased in copy.]

[Words in italic in bold-face type in copy.]

In carrying out the remaining steps in the preparation of my improved glue, the dried base, Per D. obtained as above, is mixed with *about* [from two to]* three parts or less by weight (of dried base), of water according to the strength of the joint and economy desired. The dried base does not materially go into solution in the water unless heat is applied, but a liquid suspension is thereby formed which is agitated and treated with a solvent of cellulose, as, for example, an aqueous solution of caustic soda or potash *alkaline* Per D. *to phenolthalein*, using if cold from six to ten per cent of the weight of the dry base, of caustic soda or its equivalent of caustic potash. The alkali, I believe, acts chemically to unite with one or more starch molecules and with the water to form a colloidal compound. The alkali is best added in the form of a solution of from 33% to 50% strength. Sodium and potassium hydrates are the most available and among the most powerful of the Per D. known solvents of *the starch* cellulose and Per D. are well adapted for [the]* *most* purposes [in question.]*

To take a specific example, a given quantity, say 200 lbs. of the dried amylaceous base was mixed with from 100 to 200 lbs. of water (preferably 225 lbs. or less). After the mixture was thoroughly agitated, 20 lbs. of caustic soda was added in concentrated solution of approximately one part alkali in one to two parts water. This was added with extreme slowness, requiring 15 to 20 minutes for the 50 lbs. solution required. During this time constant stirring was maintained in order to equalize and distribute the action of the caustic *soda* as Per D. [fol. 1094] fully as possible. When normal temperatures were used the result has not been obtained with less than 6 parts of Per D. NaO[h]*H per 100 parts of amylaceous base. The result consists in what is

[*Words and figures enclosed in brackets erased in copy.]
[Words in italic in bold-face type in copy.]

called the passing over or "coming across" of the mixture and may be described as follows:

During the earlier stages of the addition of the caustic in the above example, little difference in the appearance of the mass was apparent. Soon, however, it became creamy and then more pasty and difficult to stir. When about half the caus-
Per D. tic *soda* had been added, there was faintly observable a minute mottled effect on the surface of the mass being stirred, and it gradually assumed a translucent porcelain-like appearance. If at this time a little of the mixture was squeezed between glass plates portions of the mixture were observed to be transparent and almost invisible. Other portions presented much the appearance of the original mixture of water and suspended
Per D. particles of starch. As the addition of caustic *soda* proceeded accumulations of clearer matter occurred on the sides of the vessel and on parts of the stirrers
Per D. and finally when the [exact]* proper amount of caustic had been added, the entire mass "passed over" or "came across," being converted from a mixture of suspended starch and water containing
Per H. [traces of]* caustic to a homogeneous colloidal compound of starch caustic and water. A little excess of caustic was preferably added to prevent decomposition of the compound by the carbonic acid or moisture of the air.
Per D. [so that as]* *As* much as fourteen per cent
Per D. *NaOH, or the equivalent of other caustic may be* [has been used.]* leaving some free caustic in the prepared glue. The word "compound" is here used in the more modern chemical [fol. 1050] sense of matter connected within the limits of some quantitative relation to produce a definitely recognizable product having certain
Per I. [different]* *definite* physical characteristics.

[*Words and figures enclosed in brackets erased in copy.]
[Words in italic in bold-face type in copy.]

It is found that temperature affects the amount of caustic required to produce this result and it is believed that as temperature affects the polymerizing or uniting power of the starch molecules, one with another, so it affects the ability of a smaller quantity of caustic to satisfy or bring across a given quantity of starch. It is found that at successively increasing temperatures one is enabled to bring across the mixture with successively decreasing proportions of caustic.

As previously stated, when ordinary starch is heated with water, it absorbs enormous quantities of water, and if only two or three parts of water are used becomes of a stiff jelly-like form which must be very much diluted before it will be practically workable.

I find, however, that using my improved glue base and method of mixing the same, this water absorbing power can be greatly reduced and can be regulated, although the mixing is done with the same proportions of alkali and carbohydrate or else the same temperature, which have hitherto produced unworkable jellies or weakly adhesive pastes or mucilages. And by the use of cassava starch in particular, results can be secured entirely different from those hitherto produced, as stated by others,

Per H. preferably with corn [or potato].* Thus, by proper adjustment of conditions of mixing I am able to produce this glue even with certain grades of untreated cassava carbo-

Per H. hydrate *and with other starches and conversion products (starchy carbohydrates)*. The preliminary treatment, however, substantially reduces the absorption of water by the starch and [fol. 1051] prevents it from becoming

Per D. jelly-like and tough when afterward treated either with the water as above [a]* indicated or with the alkali, or both.

In the second part of my improved proc-

Per D. ess, less than *about* three parts of water

[*Words and figures enclosed in brackets erased in copy.]
[Words in italic in bold-face type in copy.]

by weight to one part of the dry material are used and after adding the solvent it is found that even with such a small
Per D. amount of water, the batch will assume a
15 *semi*-fluid consistency much superior to that *ordinarily* obtained by the use of water alone and will not become jelly-like and tough as in former processes. The alkali added acts, I believe, to dissolve more or less the cellulose and carbohydrate, uniting with the same and with the
Per D. water and forming [an]* *glue* [adhesive]* of very tenacious properties. The dry carbohydrate is mixed with the water with a carefully regulated heat, if any. The action of heat replaces the action of a portion of the
Per D. caustic in transforming the *glue base, as explained above.* [glue base, and I
Per D. believe that the heat polymerizes the starch molecules (as in jellifying) so that one molecule of caustic combines to satisfy several starch molecules, and as the temperature is increased the quantity of caustic required is di-
Per D. 27 minished].* By the preliminary treatment in reducing the water absorbing power of the carbohydrate, a very con-
Per D. centrated mixture *with* [of the adhesive and]* water may be obtained.

Experiments indicate that after the carbohydrate base has been treated in
Per I. accordance with the first step of my process, [that]* the proportion of amylo-cellulose in the carbohydrate granule has been
5 increased. I believe this increase in the percentage or proportion of the amylo-cellulose in the carbohydrate allows of the same to be changed into a good glue with very much less water than would otherwise [fol. 1052] be required. One way which has been found quite satisfactory for determining when the

---

[*Words and figures enclosed in brackets erased in copy.]
[Words in italic in bold-face type in copy.]

action of the acid or its equivalent, and the agitation, have been carried far enough in the first step, is as follows:

When the carbohydrate glue base which has been dried has been boiled for ten minutes with dry live steam at 100 lbs. pressure with 9 parts of water and tested for viscosity while hot, it showed a viscosity between that of cold water and three times that of cold water.

In specific examples tried, the carbohydrate base, subjected to the above test, [which]* has shown [a]* viscosit[y]ies between that of cold water and three times that of cold water, [have been observed]* but *a product* showing [a product]* about two times the viscosity of water is preferred.

Per D.
Per D.
Per D. 20
Per I. .

The carbohydrate glue base is not a "soluble starch" (giving clear solutions in hot water) and it is not a "modified starch" (swelling and gelatinizing in cold water).

Sub. H2

[Matter enclosed between rules erased in copy.]

When treated in accordance with my process, I find that the carbohydrate glue base may be formed into glue by using only from one to three parts of water, [but]* the more water used the greater the delay in drying. Preferably less than 4½ parts of water should be used in making the glue from the carbohydrate base.

I believe that the cause of the tenacious properties when carbohydrates are treated with water and a strong solution of an alkali may be traced to the proper proportioning of viscosity, cohesion and adhesion, together with the peculiar chemical action which caustic loosely combined *or free* in the glue as applied, exerts on the cellulose which it in turn combined

Per D.

[*Words and figures enclosed in brackets erased in copy.]
[Words in italic in bold-face type in copy.]

Per D. [fol. 10[illegible]3] with, in making the joint to *form alkali metal carbonate, bicarbonate and acetate*. I believe this proper proportioning is due to the partial change of the integument and the proper proportioning of the amylo-cellulose and the grandulose (or the proper mean polymerization) when united with caustic and water. Consequently, I believe that to obtain the best results it is necessary to abstain from reducing the cellulose to true soluble starch, and that sufficient cellulose must be left to make the glue amply tenacious. Therefore, the action of the acid and alkali should not be carried so far nor the temperature be *so*

Per D. [too]* high as to destroy all the cellulose [or]* and impair its strength by changing it into soluble starch and the starch into sugar or textrine.

Also, in actual practice I have found that a good glue is produced by treating the base with the chemicals to reduce the water absorbing power

Per D. to a point where the base *if* [is]* mixed with from 2 to 3 parts of water and subjected to heat of 170° F. would result in a syrupy condition instead of a thick jelly-like mass.

I find that by such suitable treatment under my process it is possible to produce from the base long filaments having a strength similar to threads of animal glue. Practically all the water must be later removed that goes into the glue solution and is applied to the joints, hence an increase of water in the glue solution involves changes in drying methods, or in drying time, or in risks of injury to the material due to warping by the extra water, all of very

Per D. serious consequence. The diluted [mixtures of]* *or adulterated* pastes hitherto made from the natural carbohydrates in

Per D. the manner explained before are [wholly]*

Per D. unfit for [most]* *many* classes of work and especially wood joint work, since they

[*Words and figures enclosed in brackets erased in copy.]
[Words in italic in bold-face type in copy.]

Per D. [fol. 1054] contain so much water *or adul-*
Per D. *terants* that it takes the joints very long
Per D. to dry or [and]* when they do become
dry there is so little *binding* material left
that only a very weak bond is obtained. Thus it is
of the greatest importance and value to produce a
concentrated glue solution ready for application
which parallels the animal glue solutions now em-
ployed industrially, in respect to water contents and
physical properties in application and is equal or
superior as to strength and permanency.

Certain advantages of my improved process may
be obtained to some extent even although other ma-
terials be mixed with the amylaceous material to
form the glue base.

Per H. [My]* *In the preferred form described*
my improved glue is transparent and free
from odor, and is very stable after mixing
Per H. for use, [I have found]* it is instantly
Per H. adhesive to clean surfaces, [Its]* its co-
hesion is very great but not sufficient to
overcome its adhesion and its viscosity
Per H. *is lasting* and low enough to permit ready
application, but so proportioned to its
cohesion that it is capable of being applied by ma-
chinery like hide glue, but still very long tough fibers
are produced if freshly joined surfaces are separated.
I have found that, owing to breakage of these fila-
ments quick separation of such surfaces produces a
crackle like electric sparks. My glue will produce
joints which are practically unaffected by natural
humidity and which are unaffected by pro-
Per D. longed dry heat. [It]* *In the preferred*
form it forms a joint with wood or other
cellulosic material, which joint is distin
guished from ordinary mucilages, sizes and pastes
by the fact that it consists of the following layers in
the order named, unaltered cellulosic material, cellu-

*[Words and figures enclosed in brackets erased in copy.]
[Words in italic in bold-face type in copy.]

[fol. 1055] losic material altered by caus-
Per D. tic, [unfriable]* *tough* amylaceous ma-
terial altered by caustic, cellulosic mate-
rial altered by caustic and unaltered cellulose. This joint can probably be distinguished wherever found, by the shading of the above layers into one another when stained with iodine and examined
Per D. under the microscope *and by other tests.* Glued up panels have been placed behind a radiator for 18 months without cracking or separating of the glue joint. These features make my glue especially advantageous for purposes in
Per D. which other *vegetable* glues are practically useless.

Although I have described my improvements in great detail and with much particularity and have mentioned particular compounds which I prefer to use, I desire it to be understood that I do not limit myself to such details and compounds,
Per G. *except as clearly specified in the appended claims, as many modifications and* [as many]* substitutes may be found; but, having fully and clearly described my in-
Per G. vention *with respect to one particular embodiment thereof,* what I claim and desire to secure by letters patent, is:

---

1. The process of making a glue base which consists in agitating cassave carbohydrate with water and suitable chemicals to alter the polymerization of the carbohydrate.

2. The process of making a glue base which consists in agitating cassava carbohydrate with water to which an acid reaction has been given to decrease the water absorptive properties of the carbohydrate without rendering it materially soluble in water.

3. The process of making a glue base which consists in agitating a carbohydrate with water to which [fol. 1056] an acid reaction has been given to decrease

[*Words and figures enclosed in brackets erased in copy.]
[Words in italic in bold-face type in copy.]

the water absorptive properties of the carbohydrate without rendering it materially soluble in water.

4. The process of making adhesive which consists in treating cassava carbohydrate with water and suitable chemicals to decrease its water absorptive properties and leaving a material portion of the carbohydrate insoluble in water.

5. The process of making a glue base which consists in agitating a carbohydrate with water and suitable chemicals to decrease the water absorptive properties of the carbohydrate to properly proportion the viscosity, adhesiveness and cohesiveness resulting when the base is dissolved to form glue.

6. The process of making a glue base which consists in agitating a carbohydrate with water and suitable chemicals to proportion the viscosity, adhesiveness and cohesiveness resulting when the base is dissolved to form glue properly for the appli-
Sub D.' cation of the glue by machinery.

7. The process of making a glue base which consists in treating an amylaceous carbohydrate to increase the proportion of cellulose therein.

8. The improved process of making a wood glue base which consists in mixing cassava carbohydrate with substantially an equal weight of water, heating the same to about 130° F. adding slowing from two per cent to three per cent by weight of carbohydrate of an acid and agitating the batch from four to six hours without rendering the carbohydrate materially soluble in water and then drying the carbohydrate to form a glue base.

9. The improved process of making a wood glue base which consists in mixing a carbohydrate with water, heating the same to about 130° F. adding slow-
[fol. 1057] *ing* from two per cent to three per cent by weight of carbohydrate of an acid and agitating the batch from four to six hours without rendering the carbohydrate materially soluble in water and then drying the carbohydrate to form a glue base.

10. The improved process of making a wood glue base which consists in mixing a carbohydrate with water, heating the same, adding a digesting agent and agitating the batch from four to six hours to materially reduce the water absorptive property of the carbohydrate without rendering the carbohydrate materially soluble in water and then drying the carbohydrate to form a glue base.

11. The improved process of making a wood glue base which consists in mixing a carbohydrate with water, heating the same, adding a digesting agent and agitating the batch to materially reduce the water absorptive property of the carbohydrate without rendering the carbohydrate materially soluble in water and then drying the carbohydrate to form a glue base.

12. The improved process of making a wood glue base which consists in mixing a carbohydrate with water, heating the same, adding a digesting agent and agitating the batch from four to six hours to materially reduce the water absorptive property of the carbohydrate without rendering the carbohydrate materially soluble in water to form a glue base.

13. In the making of adhesives, treating cassava flour with substantially an equal weight of water, heating the same to about 130° F. and adding from 2% to 3% by weight of strong sulphuric acid slowly and with agitation, without rendering the flour materially soluble in water, then neutralizing the acid with an alkali after from 4 to 6 hours agitation.

[fol. 1058] 14. In the making of adhesives treating cassava starch with a suitable amount of water, heating the same and adding acid and agitating to decrease the water absorptive properties of the starch but without rendering the starch materially soluble in water, stopping the agitation after from 4 to 6 hours.

15. In the making of wood glue, treating a starch material insoluble in water with substantially an

equal weight of water, heating the same to about 130° F. and adding from 2% to 3% by weight of a strong acid and thoroughly agitating the bath without rendering the flour materially soluble in water, to convert the material by changing its polymerization a material extent.

16. In the making of adhesives, treating amylaceous material with a reagent to decrease its water absorptive properties, leaving a material portion of the amylaceous material insoluble in water.

17. In the making of adhesives, treating a suitable carbohydrate with an acid and water without rendering the carbohydrate materially soluble in water, to decrease the water absorptive properties of the carbohydrate.

18. A carbohydrate glue base characterized by the facts that it is not soluble as soluble starch (giving clear solutions in hot water) and that it is not a modified starch (swelling and gelatinizing in cold water).

19. The process of making glue, as distinguished from mucilages, sizes and paste, which consists in dissolving an amylaceous material by means of an alkaline digesting agent.

20. The process of making glue which consists in dissolving cassava carbohydrate by means of a suitable digesting agent.

[fol. 1059] 21. The process of making glue as distinguished from mucilages, sizes and pastes, which consists in dissolving cassava carbohydrates in caustic alkali.

22. The process of making a wood glue as distinguished from mucilages, sizes and pastes, which consists of mixing a carbohydrate which is substantially insoluble in water, with water and caustic soda or other equivalent alkali to dissolve the carbohydrate, the total amount of water used being from 1 to 3 parts by weight of the carbohydrate, the amount

of caustic soda used being from 6% to 10% by weight of the carbohydrate or the equivalent weight of other alkali.

23. The process of making a wood glue as distinguished from mucilages, sizes and pastes, which consists in treating below 212° F. a carbohydrate containing amylaceous matter which is substantially insoluble in water with water and adding caustic alkali to dissolve the carbohydrate.

24. The process of making a wood glue as distinguished from mucilages, sizes and pastes, which consists in treating below 212° a carbohydrate which is substantially insoluble in water and caustic alkali to dissolve the carbohydrate, the amount of water used being less than 4½ parts by weight of dry carbohydrate.

25. The process of making a wood glue as distinguished from mucilages, sizes and pastes, which consists in mixing cassava carbohydrate which is substantially insoluble in water, with water and caustic alkali to dissolve the carbohydrate, the amount of water used being less than 4½ parts by weight of dry carbohydrate.

26. The process of making a wood glue which consists in treating a suitable starchy product which is substantially insoluble in water with a solvent of [fol. 1060] cellulose to produce a glue having adhesive powers substantially as great as those of good animal glue.

27. In the making of wood glue, treating a suitable starchy product insoluble in water with a solution of caustic alkali to dissolve the starchy product and yield a compound having substantially the properties of an animal glue.

28. In the making of adhesives, treating cassava carbohydrate with a solvent of cellulose to produce a compound having substantially the properties of an animal glue.

29. In the making of glue, treating a suitable starchy product with less than three parts by weight of water and adding a solution of a caustic soda or other equivalent alkali using 6% to 14% by weight of the caustic soda or its equivalent of other alkali.

30. The process of making glue which consists in properly preparing a vegetable carbohydrate to remove matters injuriously affecting the viscosity and tenacity of the prepared glue and combining the product thus produced with less than four and one half parts of water and an alkaline digesting agent to produce a glue for application.

31. The process of making wood glue which consists in agitating a carbohydrate with a digesting agent to decrease its water absorptive properties and then combining the product thus produced with less than four and one half parts of water to produce a glue for application.

32. The process of making wood glue which consists in agitating a carbohydrate with a digesting agent to decrease its water absorptive properties without rendering the carbohydrate materially soluble in water and then combining the product thus [fol. 1061] produced with water to produce a glue for application.

33. The process of making wood glue which consists in agitating a carbohydrate with a digesting agent to decrease its water absorptive properties without rendering the carbohydrate materially soluble in water and then combining the product thus produced with an alkaline digesting agent and water to produce a glue for application.

34. The process of making wood glue which consists in agitating a carbohydrate with a digesting agent to decrease its water absorptive properties and then combining the product thus produced with caustic alkali and water to produce a glue for application having free caustic alkali therein.

35. The process of making glue which consists in properly preparing a vegetable cassava carbohydrate to remove matters injuriously affecting the viscosity and tenacity of the prepared glue without rendering the carbohydrate materially soluble in water and combining the product thus produced with less than four and one half parts of water and an alkaline digesting agent to produce a glue for application.

36. The process of making wood glue which consists in agitating a cassava carbohydrate with a digesting agent to decrease its water absorptive properties without rendering the carbohydrate materially soluble in water and then combining the product thus produced with water to produce a glue for application.

37. The process of making glue as distinguished from mucilages, sizes and pastes, which consists in agitating cassava carbohydrate with water and a digesting agent to reduce the water absorptive properties of the carbohydrate without rendering it ma- [fol. 1062] terially soluble in water, and then drying the batch and mixing the carbohydrate with water and caustic alkali, the amount of water used being less than four and one half parts by weight of dry carbohydrate, the amount of caustic used being from 6% to 10% by weight of dry carbohydrate, and the caustic being added in the form of a solution, to dissolve the carbohydrate to form the glue.

38. The process of making glue as distinguished from mucilages, sizes and pastes, which consists in agitating a carbohydrate with water and a digesting agent to reduce the water absorptive properties of the carbohydrate without rendering it materially soluble in water, then mixing the carbohydrate with water and caustic alkali, the amount of water used being less than four and one half parts by weight of dry carbohydrate, the amount of caustic used being from 6% to 14% by weight of dry carbohydrate, to dissolve the carbohydrate to form the glue.

39. The process of making glue as distinguished from mucilages, sizes and pastes, which consists in agitating a carbohydrate with water and a digesting agent to reduce the water absorptive properties of the carbohydrate without rendering it materially soluble in water, then mixing the carbohydrate with water and a solvent of cellulose, the amount of water used being less than four and one half parts by weight of dry carbohydrate, to dissolve the carbohydrate to form the glue.

40. The process of making glue as distinguished from mucilages, sizes and pastes, which consists in agitating cassava carbohydrate with water and a digesting agent to reduce the water absorptive properties of the carbohydrate without rendering it materially soluble in water, then mixing the carbohy- [fol. 1063] drate with water and caustic alkali, the amount of water used being less than four and one half parts by weight of dry carbohydrate, the amount of caustic used by being from 6% to 10% by weight of dry carbohydrate, to dissolve the carbohydrate to form the glue.

41. The process of making glue as distinguished from mucilages, sizes and pastes, which consists in agitating cassava carbohydrate with water and a digesting agent to reduce the water absorptive properties of the carbohydrate without rendering it mamaterially soluble in water, then mixing the carbohydrate with water and caustic alkali, to dissolve the carbohydrate to form the glue.

42. The improved glue process which consists in treating cassava carbohydrate with substantially an equal weight of water, heating the same to about 130° F., adding from 2% to 3% by weight of an acid, slowly, and during agitation, neutralizing the batch with an alkali after from 4 to 6 hours' agitation, then cooling and drying the batch, then adding from 1 to 3 parts by weight of water, and then while being agitated treating the same with a solution of a caustic alkali using 6% to 14% by weight of the

dry alkali and applying the resulting product to surfaces with which the caustic is adapted to combine and forming a joint between said surfaces.

43. In the making of adhesives, treating cassava flour with substantially an equal weight from 2% to 3% by weight of strong sulphuric acid slowly and with agitation, without rendering the flour soluble in water, then neutralizing the acid with an alkali after from 4 to 6 hours' agitation, then cooling and drying the batch, then adding from 1 to 3 parts by weight of water and then while being agitated treat- [fol. 1064] ing the same with a solution of caustic alkali using 6% to 10% by weight of the dry alkali.

44. In the making of adhesives, treating cassava starch with a suitable amount of water, heating the same and adding sulphuric acid to decrease its water absorptive properties of the starch but without rendering the starch materially soluble in water, then neutralizing the acid and drying the batch, then treating the dried material with water and caustic alkali to form a glue.

45. In the making of adhesives, treating a starchy material insoluble in water with substantially an equal weight of water, heating the same to about 130° F. and adding from 2% to 3% by weight of a strong acid without rendering the flour materially solule in water, then neutralizing the acid, then cooling and drying the batch and adding from 1 to 3 parts by weight of water and treating the same with a solvent of cellulose to form a glue.

46. In the making of adhesives, treating a suitable carbohydrate insoluble in water with water and a reagent to decrease its water absorptive properties but without rendering the carbohydrate materially soluble in water, then allowing the batch to dry, then treating the same with water and a solvent of cellulose such as caustic alkali to form a glue.

47. In the making of adhesives, treating a suitable starchy product with water and an acid to decrease

its water absorptive properties and after its polymerization but without rendering the starch materially soluble in water, then treating the same with a solvent of cellulose to form a glue.

48. In the making of adhesives, treating a suitable carbohydrate with an acid and water having an acid reaction without rendering the carbohydrate mate- [fol. 1065] rially soluble in water, to decrease the water absorptive properties of the carbohydrate and then treating the carbohydrate with a solvent of cellulose.

49. In the making of adhesives, treating a starchy product substantially insoluble in water with an acid and water to decrease its water absorptive properties without rendering it soluble in water, and also treating it with an alkali to obtain a viscous compound.

50. A glue base composed of starchy material derived from the secretions of the cassava plant.

51. A glue base composed of carbohydrate which when boiled for 10 minutes with dry hot steam at 100 pounds pressure with nine parts of water and tested for viscosity while hot will show a viscosity of approximately two times that of cold water.

52. A base for glue as distinguished from mucilages, sizes and pastes, comprising treated amylaceous grains substantially insoluble in water and the outer so-called amylo-cellulose coating of which grains has been partially but not entirely converted.

53. A base for glue as distinguished from mucilages, pastes and sizes, comprising treated amylaceous grains in which the proportion of so-called cellulose is greater than in the natural material from which the base is derived.

54. A glue composed of cassava carbohydrate which when boiled for 10 minutes with dry hot steam at 100 pounds pressure with nine parts of water and tested for viscosity while hot will show as viscosity

between that of cold water and three times that of cold water.

55. A base for glue as distinguished from mucilages, pastes and sizes, comprising treated cassava [fol. 1066] amylaceous grains in which the proportion of so-called cellulose is greater than in the natural material from which the base is derived.

56. A glue comprising cassava carbohydrate rendered semi-fluid by digestion.

57. A glue comprising cassava carbohydrate dissolved in alkaline digesting agents containing alkali or alkali earth metals.

58. A wood and fiber glue formed from a carbohydrate by direct union therewith of not more than four and one half parts of water and a caustic alkali.

59. A wood and fiber glue formed from amylaceous grains or feculæ by suspension thereof in water and rendered semi-fluid by digestion.

60. A glue containing a carbohydrate base substantially insoluble in water and dissolved by caustic and containing free caustic.

61. A glue consisting of a vegetable carbohydrate base substantially insoluble in water and dissolved by water and caustic alkali, the amount of water being less than four and one half parts by weight of dry carbohydrate and the amount of caustic present less than 10% by weight of the dry carbohydrate.

62. A glue consisting of a vegetable carbohydrate base substantially insoluble in water and dissolved by water and caustic alkali, the amount of water being less than four and one half parts by weight of dry carbohydrate.

63. A glue containing a cassava carbohydrate base substantially insoluble in water and dissolved by water and caustic alkali, the amount of water being less than four and one half parts by weight of dry carbohydrate.

64. A glue consisting of a vegetable carbohydrate base dissolved by water and a solvent of cellulose, [fol. 1067] the amount of water being less than four and one half parts by weight of dry carbohydrate.

65. A wood and fiber glue formed from cassava amylaceous grains or feculæ by suspension thereof in water and rendered semi-fluid by digestion.

66. A glue as distinguished from mucilages, sizes and pastes, consisting of a carbohydrate base substantially insoluble in water and dissolved by water and a solvent of cellulose.

67. A glue consisting of a cassava carbohydrate base substantially insoluble in water and dissolved by less than water and a solvent of cellulose.

68. A glue having a carbohydrate base and substantially unaffected by the natural humidity and having substantially as good adhering qualities as the best animal glue.

69. A glue composed of a carbohydrate base and caustic alkali and substantially unaffected by the natural humidity and having substantially as good adhering qualities as the best animal glue.

70. A glue composed of a cassava carbohydrate base, a solvent of cellulose and substantially unaffected by the natural humidity and having substantially as good adhering qualities as the best animal glue.

71. The improved glue which consists of starchy material, water and solvent of cellulose.

72. The process of making a wood glue which consists in treating a glue base containing amylaceous matter insoluble in water with a caustic alkali properly proportioned substantially as described to produce a glue having a viscosity to flow through pipes and the adhesiveness of animal glue.

72 73. The process of making a wood glue which [fol. 1068] consists in suspending a glue base containing amylaceous matter insoluble in water in less

than 4½ parts by weight of water and adding thereto a caustic alkali properly proportioned substantially as described to produce a glue having a viscosity to flow through pipes and the adhesiveness of animal glue.

[Matter enclosed between rules erased in copy.]

Remarks

In the Examiner's action of September 20th, it is stated that action on the merits of the claims is deferred pending filing of satisfactory evidence as to certain points.

The parties in interest have gone to great expense and have retained the services of a consulting chemist in order to clear up these points for the Examiner. The result of all this work shows that it is advisable to amend the specification slightly in many places. Although these amendments are not material, nevertheless, on account of the number of them it has been deemed best and simplest to rewrite the specification and claims in order to avoid multiplicity of minor amendments and in order to place all of the pertinent part of the case together in the file. We believe that the Examiner's criticism of the former specification will not apply to the present specification.

We submit herewith affidavit of a consulting chemist showing that in applicant's process the water absorptive properties of the carbo-hydrate have been decreased when treated in accordance with applicant's process and also showing that quantitative experiments have been carried out, especially showing the fact that the carbo-hydrate when treated by applicant's process does not go materially into solution. We believe that this answers the most of [fol. 1069] the Examiner's criticisms as to the claims. As to the Examiner's objections and criticisms of former claims 37, 39, 33, 11 to 14, 16, 17, 19, 20, 22, 25 to 28 and 34 to 36, we have endeavored in rewriting these claims to make them accurate and definite and to avoid any other criticisms the Examiner has made thereto.

As to the claims now contained in the case, we submit the following. Applcant's claims may be divided up into the following divisions: First, claims drawn to the particular process by which the glue base is obtained; that is,

a dry carbohydrate which is to be used as a base for making glue. Second, claims drawn to the second part of applicant's process, which consists in the treatment of the glue base formed by the first step whereby a resulting glue is obtained which is quite different from what is commonly known as mucilages, sizes and pastes. Third, claims covering the combination of the above two steps. Fourth, applicant's improved glue base product; that is, the product resulting from the first step. Fifth, applicant's improved glue product including the glue making an exceptional joint; that is, the product resulting from the second step, or the combination of the first and second steps.

With regard to the first step of applicant's process, many of the claims are limited to the use of cassava. Applicant has found that cassava is especially adapted as a base for glue, and has considerable advantages over other forms of carbohydrates. Furthermore, the prior art cited does not show any process for producing a glue base; that is, a material especially adapted for use in glue in which the carbohydrate has its polymerization changed. Applicant has found that by the first stage of the process, i. e., we believe [fol. 1070] by changing the polymerization, the quality of the resulting glue is much improved. Furthermore, nothing in the prior art cited shows a glue base which has its water absorptive properties decreased without rendering it materially soluble, nor does the prior art show any such process for proportioning the viscosity and adhesiveness and cohesiveness of the resulting glue. Nor does the prior art show any process for producing a glue base by increasing the cellulose constituent. Claims 1 to 17 are drawn to these features of the first step and are therefore clearly allowable.

Claims 19 to 29 are drawn to the second step. As we have above pointed out, cassava has special advantages over other forms of carbo-hydrate. No prior patent cited discloses the use of cassava for glue. Also no prior patent cited discloses the process for making glue as distinguished from mucilages and pastes, etc., made by dissolving the same by the action of the caustic alkali. That is, we do not mean first dissolving the carbo-hydrate in water and then adding caustic alkali, but actually dissolving the glue by the action of the caustic alkali itself. Furthermore, none of the prior

patents cited discloses the process of making glue by treating a carbohydrate with caustic alkali below 212° F., that is, below the boiling point. We also submit that applicant is the first to produce a vegetable glue having the adhesive properties of the best animal glue. These claims, 19 to 29, are drawn to these features of novelty, and it is therefore believed they are clearly allowable.

Claims 30 to 49 are drawn to the combination of the two steps mentioned. The prior art cited shows nothing disclosing that a carbo-hydrate has been first treated to decrease its water absorptive properties without rendering [fol. 1071] it materially soluble and then dissolving the same by the action of the caustic. Nor does the prior art cited show such a process, in which less then 4½ parts of water are used and leaving free caustic in the resulting glue. These claims are drawn to these features and also the specific quantities and details of applicant's process not shown in the prior art, and it is therefore believed that they are clearly allowable.

Claims 50 to 55 are drawn to the glue base. As before stated, none of the prior patents or prior art cited discloses the use of cassava for glue; nor do any of the prior patents disclose a glue base, which, when boiled for 10 minutes with dry hot steam at 100 lbs. pressure and with 9 parts of water and tested for viscosity while hot will show a viscosity of between that of cold water and 3 times that of cold. Nor does the prior art cited show a carbo-hydrate glue which is insoluble in water with the coating of the granules partially converted. These claims are drawn to these features, and it is therefore believed they are clearly allowable. The remaining claims are drawn to the resulting joint glue product. As before stated, cassava has been found especially advantageous for making glue by applicant, and several of the claims are thus limited. Moreover, applicant's product is distinguished from mucilages, sizes and pastes, in that it is not affected by the natural humidity and has the adhering qualities of the best animal glue and has a viscosity of about 2 times that of cold water. It forms a joint with wood or other cellulosic material, which joint is distinguished from ordinary mucilages, sizes and pastes by the fact that it consists of the following layers in the order named, unaltered cellulosic material, cellulosic material

altered by caustic, unfriable amylaceous material altered [fol. 1072] by caustic, cellulosic material altered by caustic and unaltered cellulose. This joint can probably be distinguished wherever found, by the shading of the above layers into one another when stained with iodine and examined under the microscope. The prior art cited does not show any other vegetable product having these qualities. Nor does the prior art cited show a glue made from a carbohydrate base by dissolving with caustic, which glue is semi-fluid; nor does it show such a resulting glue containing free caustic. Free caustic is undoubtedly especially advantageous in the wood joint, to which the glue is applied. Neither does the prior art show such a glue made up from a carbohydrate base which contains less than 4½ parts by weight of water. These glue product claims are all limited to these various features and it is therefore believed they are clearly allowable.

In view of the above, a reconsideration and favorable action on the case is earnestly solicited.

Respectfully submitted.

Kenyon & Kenyon, Attorneys for Applicant.

[fol. 1073] Application Room, App. 6, 1911, U. S. Patent Office

460,737

Paper No. 11, Affidavit

United States Patent Office

In re Application of Frank G. Perkins. Serial No. 460,737. Filed November 2, 1908. For Adhesives and Method of Making the Same

Affidavit

I, William M. Grosvenor, being duly sworn, do depose and says as follows:

I am a chemist by profession and believe that I am qualified to undertake and carry out tests in regard to the process described in the above entitled application for the following reasons:

I began studying chemistry and making chemical tests and experiments in 1886, was graduated with the highest

honors of my class at Polytechnic Institute, Brooklyn, N. Y., in 1893, receiving the degree of Bachelor of Science in chemistry, was invited to become an instructor of chemistry in the Polytechnic thereafter and did in fact act as instructor in analysis the following year under Dr. Peter Austin, the well known chemical expert and investigator. During this time investigations were made and published on perchromic acid. Believing me suited for more advanced work, Dr. Austin advised pursuing chemical studies at Johns Hopkins University, to the Post-Graduate department of which I was admitted in 1894, being the first technical school graduate ever admitted. My studies there embraced advanced chemistry under Dr. Ira Remsen, physics and mathematics under Dr. Joseph H. Ames. [fol. 1074] Thereafter I was employed in special industrial investigation in the interest of D. O. Mills and John D. Rockefeller for nearly a year, during which time also numerous articles were published in the Engineering & Mining Journal and other papers. After completing this work I became chemist at the first Castner Electrolytic Alkali plant established in this country where it was my duty to ascertain yields, determine losses and investigate their causes. In 1896 chemical studies were again taken up under Dr. Edgar F. Smith, of University of Pennsylvania, where investigations were made and published upon the electrolytic production of nitrates and also the production of Azobenzene, where also many organic preparations and analyses were made, terminating in 1898 by graduating as Doctor of Philosophy in chemistry (the first student of that University to specialize entirely on chemistry-electro, organic and inorganic—for the Doctor's degree). Immediately after graduation I was given charge of the cost, determination and plant design and estimation of the Ampere Electro-chemical Co., the entire business of which was the investigation and perfection of new processes. In 1900 I went to the General Chemical Co. as Assistant Superintendent of the Works taken over from E. R. Squibb, and in 1903 was placed in the investigation department of that company, devoting most of my time to investigations in organic chemistry, publishing an exhaustive article on refined methods of analysis of Acetate of Lime and securing U. S. Patent 741,243 for the Process of making Acetate

of Soda. On leaving the General Chemical Co., the manager of the investigation department stated in writing that "Dr. Grosvenor's education is of a very high order; he is an indefatigable worker, painstaking and thorough to [fol. 1075] an unusual degree. He is capable of exhausting any of the scientific problems that are involved in industrial processes." In 1905 I became superintendent of the Contact Process Co. in Buffalo, in pursuance of which work it was necessary to likewise investigate processes and yields, determine losses and ascertain and correct their causes. Since the latter part of 1906 I have been engaged in consulting and expert work at 1123 Broadway, N. Y., have investigated and obtained Letters Patent on certain methods or recovering organic compounds, have studied the behaviour of starch and flour in certain aspects and am permanently retained by four companies all manufacturing organic products on a large scale. During this time papers have been published on Calculations for Dryer Design, Plant arrangement and lay-out, and on the manufacture of sulphuric and nitric acids. I am a member of good standing of the American Chemical Society, Society of Chemical Industry, American Electro-chemical Society and Chemists' Club, N. Y., as well as being a member and one of the directors of the American Institute of Chemical Engineers.

Since the rendering of the Examiner's Action in the above entitled application, namely, September 20, 1910, I have carried out or tested the process described in the above entitled application. On treating the carbohydrate base, as described in the first step of said process, I found that it was not rendered materially soluble in water for the reason that on comparing the weight of material before treatment with the acid and after treatment with the acid I found that the amount of material remaining undissolved was substantially the same as the weight of untreated base used. The fact that the carbohydrate base did not go into [fol. 1076] solution is clearly shown by its settling out, and since the amount of carbohydrate which settles out and remains undissolved after treatment is substantially the same by weight as the amount of carbohydrate put in, it clearly shows that the residue is not merely a small amount of sediment of unattacked granules of amylo-cellulose. I have conducted quantitative experiments which clearly

show that little of the carbohydrate goes into solution. Analyses which I have and caused to be made in duplicate by others also indicate that little if any of the untreated base went into solution. I also found, by actual test with untreated bases and with bases treated in accordance with this step in the process described in said application, that the water absorptive properties of the base had been decreased in the sense that to render fluid the finished glue comparatively little water had to be added whether made by caustic alone or by caustic and heat; in other words, I found that I could produce a glue of the same viscosity with much less water if the base was treated as described by the first step of the process than when it was not so treated. I have found that the treatment with the acid descreased the viscosity of the glue produced with a given amount of water without detriment to its "tack," quick adhesive properties and cohesion.

William M. Grosvenor.

Subscribed and sworn to before me this 6th day of April 1911. James L. Crawford, Notary Public. (Seal.)

[fol. 1077] 2-260

Div. 31, Room 169

Paper No. 10

Address only "The Commissioner of Patents, Washington, D. C." and not any official by name.

All communications respecting this application should give the serial number, date of filing, title of invention, and name of the applicant.

Department of the Interior,
United States Patent Office,
Washington, April 29, 1911.
Mailed " " "

Frank G. Perkins, Care Kenyon & Kenyon, 49 Wall St., New York, N. Y.:

Please find below a communication from the Examiner in charge of your application No. 460,737, Adhesives and Method of Making the same, filed Nov. 2, 1908.

E. B. Moore, Commissioner of Patents.

This case has been reconsidered in connection with the amendment of April 6, 1911.

The reference to the Higgins patent given on page 1 of the substitute specification should be cancelled, since the same is of the nature of a disparaging reference.

Page 7, line 12: "NaOh" should be NaOH.

The statement found on page 9, lines 21-23, that "the action of heat replaces the action of a portion of the caustic in transforming the glue base," is new matter and should be cancelled.

[fol. 1078] U. S. patent to Militz, 941,159, Nov. 23, 1909, application filed Jan. 29, 1908 (127-23), discloses the preparation of a material with soluble starch, which however is insoluble in cold water, which is prepared by the action of an acid upon starch in aqueous solution. This patent meets some of the claims, illustrations of which are claims 3 and 4.

The British patent to Thomson, 21973 of 1906, same class, discloses the preparation of a so-called soluble starch, which is not soluble in cold or in warm water, by the action of sulphur dioxide. This patent seems to meet some of the claims, like claim 18.

U. S. patent to Anderson, 769,289, Sept. 6, 1904 (87-17), discloses an adhesive prepared from tapioca flour, and lines 125-130 of page 2 of the patent, mention the fact that moisture may be used in the process of preparation, which process might be called a kind of digestion. This patent is broad enough to meet some of the claims, illustrations of which are found in claims 15 and 56. Attention is also called to Meyer, 742,469, Oct. 27, 1903 (127-23).

Bloxam's Inorganic and Organic Chemistry, Philadelphia, Blackiston's Sons & Co., 1903, on page 738 describes a process of making carbohydrates waterproof which is applied in the preparation of vegetable parchment. This disclosure meets some of the claims, as claims 3, 16 and 17.

Some of the claims are drawn to theories not capable of demonstration, as the theory of polymerization, which is the foundation on which claims 1, 15 and others are based. Also a number of the claims are based on the theory of the partial conversion of the amilo-cellulose of a particular part of the grain. All the claims based on these theories are untenable.

[fol. 1079] Some of the claims are indefinite, as claims 56, 68 and 71.

Some of the claims are based on new matter, as claim 51 which is drawn to a test for applicant's adhesive which was not disclosed in the original specification.

Some of the claims are drawn to specific proportions of water and adhesive material, which appear from the claims to be critical but which proportions were not disclosed in the original specification: claims 24, 25 and others.

Many of the claims are rejectable upon the grounds above stated. However, all the claims are rejected, on the ground of multiplicity; see ex parte Chapman, 120 O. G., 2446.

Ely, Examiner.

W. W. H.

[fol. 1080] U. S. Patent Office, Received Jul. 14, 1911

Mail Room, Jul. 16, 1911, U. S. Patent Office

Serial No. 460,737

Division 31, Paper No. 13

United States Patent Office

In re Application of Frank G. Perkins. Serial No. 460,737. Filed Nov. 2, 1908. For Adhesives and Method of Making the Same

49 Wall St., New York, July 8, 1911.

Hon. Commissioner of Patents.

Sir: In response to the official action of April 29, 1911, please amend the above-entitled application as follows:

In the title in the preamble change the word "Adhesives" to Glue.

Page 2, line 1, change "adhesive" to glue

Same page, line 3, cancel "adhesives or."

Same page, line 4, cancel "and especially those"; same line after "cellulose" insert or its equivalent.

Page 2, line 10, after "degree" insert supposedly.

Same page, line 13, before "heating" insert or after.

Same page, line 14, after "necessary" insert relative; same line cancel "or"; same line after "viscosity" insert cohesiveness.

Same page, cancel line 16.

[fol. 1081] Same page, line 17, after "become" insert extremely.

Same page, line 20, after "warps" insert the wood.

[Cls. 4-7, 10-41, 11-14, 17-18, 20-30, 32-38]*

Same page, line 21, after "enough" insert and are not dense and elastic enough when dry.

Page 2, next to the last line change "an" to a.

Same page, last line, change "adhesive" to glue.

Page 3, line 2, change "wood" to animal.

Page 3, line 18, cancel "Another way of expressing" and change "the" to The.

Same page, line 19, after "is" insert also.

Same page, next to the last line, canel "the".

Same line, cancel "and which" and insert The prepared glue.

Same line, insert a period after "fiber."

Page 4, line 2, after "process" insert in its preferred form.

Page 6, line 12, cancel "from two, to" and insert about.

Same page, line 19, after "potash" insert alkaline to phenolthalien.

Same page, line 27, before "cellulose" insert the starch.

Same line, cancel "the" and insert most.

Same page, line 28, cancel "in question."

Page 7, line 9, after "caustic" insert soda.

Same page, line 19, after "caustic" insert soda.

Same page, line 27, after "caustic" insert soda.

Same page, last line, cancel "exact."

Page 8, line 6, cancel "so that as" and insert As, and change the comma to a period, after "air."

Same page, line 7, cancel "has been" and insert NaOH, or the equivalent of other caustic may be.

Page 9, line 8, change "undicated" to indicated.

Page 9, line 11, before "three" insert about.

[fol. 1082] Same page, line 14, before "fluid" insert semi.

Same line, after "that" insert ordinarily.

[*Words and figures enclosed in brackets erased in copy.]

Same page, line 19, change "an adhesive" to a glue.

Same page, cancel lines 23, 24, 25 and 26.

Same page, line 22, at the end of the line insert glue base, as explained above.

Page 9, line 27, cancel "is diminished."

Same page, last line, cancel "of the adhesive" and insert with.

Page 7, line 12, change "NaOh" to NaOH.

Page 10, line 18, cancel "which."

Page 10, lines 18 and 19, change "a viscosity" to viscosities.

Same page, line 20, cancel "have been observed."

Same line, after "showing" insert a product.

Same page, line 28, cancel "but."

Page 11, line 4, after "combined" insert or free.

Same page, line 6, after "joint" insert to form alkali metal carbonate, bicarbonate and acetate.

Same page, line 16, change "too" to so.

Same line, change "or" to and.

Same page, line 22, change "is" to it.

Page 12, line 2, cancel "mixtures of" and insert or adulterated.

Same page, line 3, cancel "wholly."

Same page, line 4, change "most" to many.

Same page, line 5, after "water" insert or adulterants.

Same page, line 6, change "and" to or.

Same line after "little" insert binding.

Page 12, line 12 from the bottom, cancel "It" and insert In the preferred form it.

Same page, line 7 from the bottom, change "unfriable" to tough.

[fol. 1083] Same page, line 2 from the bottom, after "scope" insert *and by other tests.*

Page 13, line 2, after "other" insert *vegetable.*

Re-write the claims as follows:

Sub. H[3]

D'. "1. The process of making a glue base which consists in agitating cassava carbo-

Per G. hydrate with water and *acid or the equiv-*

[Words in italic in bold-face type in copy.]

Per G. *alent* [suitable chemicals]* *whereby* [to
Per E. alter]* the polymerization of the carbohydrate *is altered.*

2. In the process of making adhesives the treating cassava carbohydrate with
" G. water and acid or its *equivalent* [suitable chemicals]* to decrease its water absorptive properties and leaving a material portion of the carbohydrate insoluble in water.

3. The process of making a glue base which consists in agitating a starchy carbohydrate or its equivalent with water
" G. and *acid or its equivalent* [suitable chemicals]* to decrease the water absorptive properties of the carbohydrate to properly proportion the viscosity, adhesiveness and cohesiveness resulting when the base is dissolved to form glue properly for the application of the glue by machinery.

[Matter enclosed between rules erased in copy.]

4. The process of making a glue base which consists in agitating a starchy car-
Per H. bohydrate [or its equivalent]* with water
" E. and suitable chemicals *below the bursting temperature of the starch* to proportion the viscosity, adhesiveness and cohesiveness resulting when the base is dis-
Per H. solved to form glue *applicable by machinery.*

5. In the making of adhesives, treating cassava flour with substantially an equal weight of water, heating the same to about 130° F. and adding about 2% or 3% by weight of strong acid slowly and with [fol. 1084] agitation, without rendering the flour materially soluble in water, then neutralizing the acid with an alkali after from 4 to 6 hours' agitation.

[*Words and figures enclosed in brackets erased in copy.]
[Words in italic in bold-face type in copy.]

Per H. 6. In the making of a glue base, treating amylaceous material [or its equivalent]* with a reagent to decrease its water absorptive properties, leaving a material portion of amylaceous material in the product insoluble in water.

7. In the making of adhesives, treating a suitable carbohydrate with water and a digesting agent without rendering the carbohydrate materially soluble in water, to decrease the water absorptive properties of the carbohydrate.

Sub. G'

H'. Per E. " E. " E. " E. " E. 8. A glue base [prepared from starchy material and]* characterized by the facts that it is *prepared from starchy material,* is not soluble as soluble starch (giving clear solution in hot water), [and]* that it is not a modified starch (swelling and gelatinizing in cold water) *and when suitably dissolved has substantially the properties of animal glue.*

" E. " E. " E. 9. The process of making [wood]* glue [as distinguished from mucilages, sizes and paste,]* which consists in dissolving an amylaceous material by means of an alkaline digesting agent *such that a wood glue is formed, as distinguished from mucilages, sizes and paste.*

Sub. H'

" E. " E. 10. The process of making glue [as distinguished from mucilages, sizes and pastes],* which consists in dissolving cassava carbohydrate in caustic alkali or

---

[*Words and figures enclosed in brackets erased in copy.]
[Matter enclosed between rules erased in copy.]
[Words in italic in bold-face type in copy.]

Per E. its equivalent *such that a glue is formed as distinguished from mucilages, sizes and paste.*

[fol. 1085] 11. The process of making
Per E. a [wood]* glue [as dis- from mucilages,
" E. sizes and pastes,]* which consists in treating a starchy carbohydrate [or its
Per H. equivalent]* with caustic [soda or its
" H. equivalent,]* *alkali* and water, to dissolve the carbohydrate, the total amount of water used being about 3 parts or less by weight of the carbohydrate, the amount of caustic *alkali used, calculated as NaOH*
Per H. [soda used]* being about 10% or less by
" H. weight of the carbohydrate [or the equivalent weight of its equivalent]*
" H. *so that a wood glue is formed, as distin-*
" E. *guished from mucilages, sizes and pastes.*
" E. 12. The process of making a [wood]*
" E. glue [distinguished from mucilages, sizes and pastes,]* which consists in mixing
" H. [a]* starch[y carbohydrate or its equivalent]* with water and caustic alkali to dissolve the carbohydrate, the amount of water used being about 3 parts or less by weight of dry carbohydrates
" E. *so that a wood glue is formed, as distinguished from mucilages, sizes and paste.*

13. The process of making a wood glue which consists in treating a suitable starchy product a material portion of which is substantially insoluble in water with a solvent of cellulose and about 3 parts or less by weight of water, to produce a glue having adhesive powers substantially as great as those of good animal glue.

14. In the making of glue, treating a suitable starchy product with about three parts or less by weight of water and adding a solution of caustic soda or other equivalent alkali using about 10% or

[*Words and figures enclosed in brackets erased in copy.]
[Words in italic in bold-face type in copy.]

less by weight of the caustic soda or its equivalent of other alkali to dissolve the product.

Sub. H[5]

Per G. 15. *In the* [The]* process of making wood glue *the combination of the following steps*, [which consists in]* agitating a starchy carbohydrate or its equivalent [fol. 1086] with a digesting agent to decrease its water absorptive properties and then combining the product thus produced with about three parts or less of
" G. water [to produce a glue for application]*.
" G. 16. *In the* [The]* process of making
" G. wood glue the [which consists in]* agitating *of* a starchy carbohydrate or its equivalent with a digesting agent to properly proportion the viscosity, adhesiveness and cohesiveness resulting when the base is dissolved to form a
Per E. glue *equal to animal glue*.

[Matter enclosed between rules erased in copy.]

Per H. 17. The process of making wood glue which consists in agitating [a]* starch[y carbohydrate or its equivalent]* with a digesting agent to decrease its water absorptive properties without rendering the carbohydrate materially soluble in *cold* water and then combining the product thus produced with *a solvent of cellulose* [caustic soda and a solution or its
" H. equivalent]* to produce a glue for application, thus proportioning the viscosity, adhesiveness and cohesiveness of the final glue.

[*Words and figures enclosed in brackets erased in copy.]
[Words in italic in bold-face type in copy.]

18. The process of making wood glue which consists in agitating a starchy carbohydrate
Per H. [or its equivalent]* with a digesting agent to decrease its water absorptive properties and then combining the prod-
Per G. uct thus produced with alkali [or]* *its equivalent* [alkali earth metal hydrox-
ide]* and water to produce a glue for ap-
Per H. plication having free caustic alkali therein.

Sub. H[6]

" G. 19. *In the* [The]* process of making wood glue *the combination of the follow-*
" G. *ing steps,* [which consists in]* agitating a cassava carbohydrate with a digesting agent to decrease its water absorptive properties without rendering the carbohydrate materially soluble in water and then combining the product thus produced with water to produce a glue for application.

[Matter enclosed between rules erased in copy.]

[fol. 1087] 20. The process of making
Per E. glue [as distinguished from mucilages,
" E. sizes and pastes,]* which consists in agi-
" H. tating a starchy carbohydrate [or its equivalent]* with water and a digesting agent to reduce the water absorptive properties of the carbohydrates without renderin[g]* it materially soluble in water, then mixing the carbohydrate with water and caustic alkali, the amount of water used being about three parts or less by weight of dry carbohydrate, the amount of caustic used being about 10% or less by weight of dry carbohydrate, to dissolve

---

[*Words and figures enclosed in brackets erased in copy.]
[Words in italic in bold-face type in copy.]

the carbohydrate to form the glue as
Per E. *distinguished from mucilages, sizes and paste.*

21. The improved glue process which consists in treating cassava carbohydrate with substantially an equal weight of water, heating the same to about 130° F., adding from 2% to 3% by weight of an acid, slowly, and during agitation, neutralizing the batch with an alkali after from 4 to 6 hours' agitation, then cooling and drying the batch, then adding from 1 to 3 parts by weight of water, and then while being agitated treating the same with a solution of a caustic alkali using about 10% or less by weight of the dry alkali and applying the resulting product to surfaces with which the caustic is adapted to combine and forming a joint between said surfaces.

22. In making of adhesives, treating a
" H. suitable starchy carbohydrate [or its equi-
alent]* insoluble in water with water
Per H. with [and]* a reagent to decrease its water absorptive properties but without rendering the carbohydrate materially soluble in water, then allowing the batch to dry, then treating the same with water and a solvent of cellulose such as caustic alkali to form glue.

23. In the making of adhesives, treat-
Per H. ing a suitable starchy carbohydrate [or its equivalent]* with an agent having an acid [fol. 1088] reaction without rendering the carbohydrate materially soluble in water, to decrease the water absorptive properties of the carbohydrate and then treating the carbohydrate with a solvent of cellulose, thus proportioning the viscosity, adhesiveness and cohesiveness of the final glue.

[*Words and figures enclosed in brackets erased in copy.]
[Words in italic in bold-face type in copy.]

Per E. 24. A carbohydrate [glue]* base for
Per H. making glue composed of starchy material derived from the secretions of the cassava plant.

[Matter enclosed between rules erased in copy.]

H.

Per E. 24. [25.]* A carbohydrate [glue]* base for making glue composed of suitable carbohydrate which when mixed with about 3 parts or less by weight of water and a solvent of cellulose will form a semi-fluid mass having substantially the adhesive properties of animal glue.

H.

Per E. 25 [26].* A base for making glue as distinguished from mucilages, sizes and pastes, embracing treated amylaceous grains substantially insoluble in water and the outer so-called amylo-cellulose coating of which insoluble grains has been partially but not entirely converted.

H.

Per E. 26 [27].* A [glue]* base for making glue composed of a starchy carbohydrate or its equivalent which when boiled for 10 minutes with dry hot steam at 100 pounds pressure with nine parts of water and tested for viscosity while hot will show viscosity between that of cold water and three times that of cold water.

H.

27 [28].* A base for glue as distinguished from mucilages, pastes and sizes, comprising treated cas- [fol. 1089] sava amylaceous grains in which the proportion of so-called cellulose is greater than in the natural material from which the base is derived.

H.

28 [29].* A glue comprising cassava carbohydrate rendered semi-fluid by digestion

[*Words and figures enclosed in brackets erased in copy.]

Per E. *and having substantially the properties of animal glue.*

H.

" H. 29 [30].* A glue comprising chiefly [a]*
" H. starch[y carbohydrate or its equivalent]*
dissolved by a digesting agent alkaline to
" E. phenol*ph*thalien and *in* about 3 parts or
less by weight of water.

H.

30 [31].* Awood and fiber glue formed
of a starchy carbohydrate or its equiva-
" H. lent by [direct]* union therewith of about
3 parts or less by weight of water and
alkali metal hydroxide.

Sub. H[7]

---

32. A wood and fiber glue formed from amylaceous grains or feculæ by suspension thereof in about 3 parts of water or less and rendered semi-fluid by digestion without acid.

[Matter enclosed between rules erased in copy.]

H.

Per H. 32 [33].* A glue as distinguished from
mucilages, sizes and pastes containing a
Per H. starchy carbohydrate base [or its equiva-
lent]* substantially insoluble in water and
dissolved by caustic and containing free
caustic.

H.

33 [34].* A glue consisting of a vegetable carbohydrate base substantially insoluble in water and
dissolved by water and caustic, soda
Per H. *alkali* [or its equivalent],* the amount of
water being about three parts or less by

[*Words and figures enclosed in brackets erased in copy.]
[Words in italic in bold-face type in copy.]

weight of dry carbohydrates and the amount of caustic present being about 10% or less by weight of the dry carbohydrate.

H.

[fol. 1090] 34 [35].* A glue consisting of a vegetable carbohydrate base substantially insoluble in water and dissolved by caustic

Per H. *alkali* [soda solution or its equivalent],* the amount of water being about three parts or less by weight of dry carbohydrate.

[Matter enclosed between rules erased in copy.]

Per F

---

36 A wood glue joint consisting chiefly of amylaceous matter and alkali metal carbonate, bicarbonate and acetate, the total amount of said compounds calculated as sodium hydroxide being between 3 and 14 per cent by weight of amylaceous matter.

[Matter enclosed between rules erased in copy.]

H F

Per H. 35 [36, 37].* A glue containing a starchy

Per H. carbohydrate base [or its equivalent]* dissolved by a solvent of cellulose and water, the amount of water in the glue being about three parts or less by weight of dry carbohydrate.

[Matter enclosed between rules erased in copy.]

Per F

---

38. A wood glue joint consisting chiefly of amylaceous matter and products evidencing the action of a solvent of cellulose upon the wood fiber.

[Matter enclosed between rules erased in copy.]

[*Words and figures enclosed in brackets erased in copy.]
[Words in italic in bold-face type in copy.]

H F

36. [37 39].* A glue as distinguished from mucilages, sizes and pastes, consisting chiefly of
Per H. a starchy carbohydrate base [or its equivalent]* substantially insoluble in water and dissolved by a solvent of cellulose.

[Matter enclosed between rules erased in copy.]

40. A glue joint containing starch and products of interaction between free caustic metal
Per F. alkali and the *material being joined.*

[fol. 1091] Per H

F.

[38, 41].* A glue having a starchy carbohydrate base or its equivalent and having such a character that it will be substantially unaffected by the natural humidity or changes in humidity and having substantially as good adhering qualities as the best animal glue.

[Matter enclosed between rules erased in copy.]

H. F.

Per I. 37 [39, 42].* A glue composed of a
Per H. starchy carbohydrate base *and a* [or its equivalent and caustic alkali]* *solvent of cellulose* and having such a character that it will be substantially unaffected by the natural humidity and having substantially as good adhering qualities as the best animal glue.

[Matter enclosed between rules erased in copy.]
[*Words and figures enclosed in brackets erased in copy.]
[Words in italic in bold-face type in copy.]

Per F

43. A wood joint made from a vegetable carbohydrate glue containing free caustic in which the caustic has combined to form a carbonate or bicarbonate and an acetate.

44. The improved wood glue joint which contains starchy material water and alkaline metal acetate an alkaline metal carbonate or bicarbonate.

45. A wood glue joint which consists chiefly of amylaceous matter in juxtaposition with the fibrous material being joined, the fibers of which show the action of a solvent of cellulose.

[Matter enclosed between rules erased in copy.]

H. F.

38 [40, 46].* The process of making a wood glue which consists in suspending a glue base containing amylaceous matter insoluble in water in about three parts or less by weight of water and treating the base with *an alkali* [caustic soda or its equivalent]* properly proportioned substantially as described to produce a glue having a *lasting* viscosity to flow [fol. 1092] through pipes and the adhesiveness of animal glue."

Per H.
Per H.
Per H.

Per E. [Add the following claim:]*

F.

41, "47. A wood and fiber glue composed of a base that is chiefly a starchy carbohydrate or its equivalent, and about three parts or less by weight of water" *and which glue has substantially the adhesive qualities of good animal glue.*

Per H.

[Matter enclosed between rules erased in copy.]
[*Words and figures enclosed in brackets erased in copy.]
[Words in italic in bold-face type in copy.]

Remarks

Applicant's attorneys in complying with the Examiner's criticism as to the multiplicity of claims, have very materially cut down the number of claims but have found that, in order to cover the same ground, the language of many of the claims has had to be considerably changed. However, the Examiner will recognize the old claims in the new claims, since the new claims 1 to 46 inclusive correspond respectively with former claims 1, 4, 5, 6, 13, 16, 17, 18, 19, 21, 22, 25, 26, 29, 31, 32, 33, 34, 36, 40, 42, 46, 48, 50, 51, 52, 54, 55, 56, 57, 58, 59, 60, 61, 62, 63, 64, 65, 66, 67, 68, 69, 70, 71, 72 and 73.

The reference to the Higgins patent has been cancelled and the specification amended as suggested.

The Examiner states with regard to page 9, lines 21 to 23, that the matter therein is new matter and should be cancelled. The statement that "action of heat replaces the action of a portion of the caustic" is submitted to be within the scope of the claims and specification of the original application, and was certainly a part of the original invention. The original specification states that by prefer- [fol. 1093] ence Six to ten per cent of caustic soda is used. Conditions of temperature, hardness of water, condition of glue base, etc., all affect the amount of caustic required, and it is for the purpose of making these matters clear in the light of a better understanding of the physical and chemical actions involved that the phrase is inserted, and, to make the description as full, clear, and exact as possible, it should be allowed to remain. Reychler showed in 1909 that the starch and caustic combine chemically and conform to the law of Gudberg and Waage. Such being the case, some explanation of the varying amount of caustic required to "bring across" or change the glue base into glue is obviously called for. It is perfectly well known that temperature affects the degree of polymerization of chemical substances, even the elements. Fouard showed in 1908 that starch solutions contained various sizes of molecules, separated them to a considerable extent by dialysis through membranes of varying densities, and confirmed the differing molecular dimensions by correspond-

ing specific rotary powers. Wacker in 1908 showed the application of the phenyl hydrazine sulphonic acid test for other polysaccharides, to the various starch products, concluding that erythro and aches dextrine contained four hexose groups, that the more readily soluble granulose contained five, the less readily soluble granulose contained six, the first material removed by decoction from amylocellulose contained seven and the last to be removed contained eight hexose groups. Roux had already shown that with water vapour under pressure the least soluble (most complex) of these were hydrolysed and made soluble (less complex) just as we would hydrolyse or saponify an ester [fol. 1094] and that these hydrolysed products tended to revert or condense into insoluble masses which were again dissolved only at similar temperatures. But it was not until 1909 in his address to the International Congress of Applied Chemistry that Ling in presenting a review of our knowledge of Starch concluded that it was a true polysaccharide, a mixture of several condensation products of monose of various degrees of condensation by abstracting of water, properly represented by the formula $(C_6H_{12}O_6)n\text{-}(N\text{-}1)H_2O$ (mathematically equivalent to the formula arrived at by Kiliani in 1908 from other considerations). Ling pointed out the many evidences that the molecules are mobile and associate and dissociate themselves like alhehyde or the higher alcohols. Applicant stated the fact that variable quantities of caustic could be made to produce the desired result. Claims were drawn in the original application broad enough to cover this part of the invention and there is surely no impropriety or "introduction of new matter" involved in the clearer statement of it.

We therefore believe that it will be clear that the matter contained in lines 21 to 23, page 9, is perfectly proper. It is merely a fuller description of the actual process as carried out in accordance with the directions contained in the original specification. Furtherfore, no new claims are drawn specifically to the use of heat, and therefore no new matter is being claimed whatever. It is believed that the Examiner should permit any such statement as tends to make the process and method of carrying the same out,

more clear. Although the case contains claims broad enough to cover the modification, nevertheless since no claims drawn to specifically cover the same, it is submitted [fol. 1095] that it is not new matter and, under the circumstances, it should be allowed to remain in the case.

Certain claims are rejected upon a U. S. patent to Melitz and British patent to Thomson. The patent to Melitz was filed Jan. 29, 1908. The patent to Thomson was not published until about July 25, 1907. Affidavits of Gertrude S. Perkins and J. B. B. Stryker are filed herewith showing invention that applicant completed his [intention]* before the filing of the U. S. patent to Melitz and before the publication of the British patent to Thomson. It is therefore unnecessary to discuss these patents with respect to the merits of the claims. Some of the claims, such as 15 and 56, are rejected upon U. S. patent to Anderson No. 769,289. The Examiner mentions Claim 15, but since this claim was a very limited claim we assume that what he intended was Claim 55. We will therefore consider Anderson with respect to Claims 55 and 56.

Anderson discloses an adhesive which may be made from wheat-starch, corn starch, Irish potato starch, sago-starch, tapioca flour, sago flour, and arrowroot starch, and which it is said might be made from any variety of commercial starch that is substantially pure and that contains enough moisture to cause the bursting and release of the interior soluble portion of the grain. Cassava is in no sense indicated as particularly desirable, and the Examiner has been fully shown by some samples the relative advantage of cassava over corn and others. Anderson does not make a glue as distinguished from mucilages and paste. It is no more an anticipation of applicant's process than starch which has been made into a paste by a large amount of boiling water in the usual awy of making all starch paste. While in lines 125 to 130, page 2, he mentions that water may be used in the process of preparation, it is apparent [fol. 1096] that this would be necessary if the starch were too dry to explode by the expansion of the moisture it already contains. Only the water which enters the starch

[*Words and figures enclosed in brackets erased in copy.]

granule and is turned into steam is in any way effective in producing Anderson's product, and no such water is used in applicant's product. Anderson does not make a glue, nor a semifluid glue, nor a base for glue as called for by the claims. We submit that it is in an entirely different art, and has no suggestion of the value of cassava or the other features of the claims for making a wood glue. Claim 55 specifies a product comprised of grains, whereas in Anderson the product has been exploded and the structure of the grains destroyed, and Anderson's process would not in any way be expected to increase the proportion of the cellulose.

We are unable to see that the patent to Meyer meets the claims in any way, although a careful consideration has been given to the same.

The Examiner cites against some claims such as former Claims 3, 16 and 17, Bloxam's Inorganic and Organic Chemistry. This reference has been carefully examined, and shows nothing but the well known process of making paper parchment by treatment with a cellulose solvent, sulphuric acid, zinc chloride Schweitzer's reagent, etc.

Claim 3 is not met because it specifies a glue base and not a sheet of paper, and because parchment could not be made by agitation as it would go to pieces. Similarly Claims 16 and 17 are not met because they specify an entirely different product, and there is no evidence that parchmenting decreases the water absorptive properties as stated by applicant in his specification. We further submit that this is an entirely different art, and contains no sug- [fol. 1097] gestions whatever as to the making of a wood glue and can not be taken as an anticipation of applicant's claims.

The Examiner criticises some of the claims in that they are drawn to theories not capable of demonstration. As to these claims being drawn to theories we submit that it is impossible to use scientific language without framing it in terms of accepted theories. If the theories are false the language is no less clear and accurate in meaning; the theory being accepted and recognized as merely a working hypothesis expressive of certain existing phenomena. The alteration of the palymerization of starch is as well established as the existence of definite hydrates in solution, the physical size of the "molecule" or even the "molecule"

itself in view of recent electrophysical research. In view of the authorities cited in discussing the action of heat, the Examiner can hardly contend that the alteration of the "state of molecular aggregation" of starch by the chemicals (claim 1) is a theory. If he still considers it so we must ask him to designate what physical properties he considers indicative of the degree of molecular aggregation. Optical properties, viscosity, water absorptive power, conductivity, capillary constant, etc., can be shown to vary in the treatment of starch and are generally admitted to be indices of molecular change. The same comment applies to former Claim 15. It is not a matter of theory but of analytical determination by two separate analysts and three different methods of determination upon which claims for the partial conversion of the amylocellulose are based. What particular part of the grain it is in may perhaps be admitted in view of the almost unlimited references that can be given where authorities state that the outer portion [fol. 1098] of the starch grain consists of amylocellulose and the inner of granulose. We believe that from the above the Examiner will distinguish between theories unfounded in fact and those legitimate and necessary working hypotheses based on all established facts and without which scientific research and even scientific speech would be impossible.

Some of the claims, such as former Claims 56, 58, and 71 are objected to as being indefinite. With regard to former Claim 56 we are unable to see anything indefinite, and we ask the Examiner to make a little more clear just what he means, or what he considers indefinite, with respect to this claim.

With regard to former Claims 68 and 71, these are now Claims 41 and 44 and, as amended, it is believed that they are perfectly definite.

With regard to former Claim 51 (present Claim 25), this has been amended so that it is believed that the objection no longer attaches. However, we submit that it was not based on new matter so as to render it objectionable for that reason. We submit that the mere fact that the test was not disclosed in the original specification is not sufficient. It would seem to us that if the actual product were described in the original specification, applicant has

a perfect right to incorporate by amendment new phrases or ways of describing the product as long as it is the same product. This is all the applicant has done, and it is therefore believed that since it is exactly the same product which he is claiming as was described in the original specification, there can be no objection to the claims on this ground.

The Examiner objects to some of the claims as drawn to specific proportions of water and adhesive not disclosed [fol. 1099] in the original specification. These claims have all been amended so that it is believed the objection is overcome. Applicant is certainly entitled to cover the process within the limits specified in the claims. It only seems a matter of terms to be used, and applicant has changed the terms to that it is believed the Examiner's criticism is obviated.

With regard to the multiplicity of claims, the number of claims has now been very materially cut down and in view of the extreme importance, and large number of novel features, and the difficulty of fully and clearly describing the same, we believe the Examiner should not require a further reduction in their number.

In view of the above, re-consideration and favorable action on the case is earnestly solicited.

Respectfully submitted,

Kenyon & Kenyon, Attorneys for Applicant.

[fol. 1100] Mail Room, Jul. 16, 1911, U. S. Patent Office

United States Patent Office

In re Application of Frank G. Perkins. Ser. No. 460,737. Filed November 2nd, 1908. For Adhesives and Method of Making the Same

Affidavit

STATE OF INDIANA,
County of St. Joseph, ss:

I, Gertrude S. Perkins, of Lansdale, Pennsylvania, being duly sworn, depose and say as follows:

I af the widow of Frank G. Perkins whose application for Letters Patent of the United States for Adhesives and

Method of Making the Same was filed November 2nd, 1908 under Serial No. 460,737. I have read the specification of said application and am familiar with the process and product described therein. The said Frank G. Perkins personally described to me the process and product described in said specification long prior to July 1st, 1907, and I personally saw the said Frank G. Perkins carry out said process and produce said product long before July 1, 1907. I have also seen prior to July 1, 1907, said Frank G. Perkins glue together pieces of wood with glue made in accordance with the process described in said specification, which tests proved most satisfactory, and I also know of my own knowledge that the said invention and improve-
[fol. 1101] ments described in said specification which were disclosed to me long prior to July 1st, 1907 were never abandoned by the said Frank G. Perkins.

Gertrude S. Perkins.

Subscribed and sworn to before me this 15th day of May, 1911. Ella C. Baustian, Notary Public. My comm. expires Apr. 7-13. (Seal.)

[fol. 1102] United States Patent Office

In re Application of Frank G. Perkins. Ser. No. 460,737. Filed November 2nd, 1908. For Adhesives and Method of Making the Same

Affidavit

State of Pennsylvania,
County of Montgomery, ss:

I, Julius B. B. Stryker, of Lansdale, Pennsylvania, being duly sworn, depose and say as follows:

I personally knew for some years prior to July 1st, 1907 Frank G. Perkins, whose application for Letters Patent of the United States for Adhesives and Method of Making the Same was filed November 2nd, 1908, under Serial No. 460,737, and I have read the specification of said application and am familiar with the process and product described therein. Prior to July 1st, 1907 said Frank G. Perkins described to me the process and product as set

forth in said application, and I personally saw and helped Mr. Perkins to carry out said process and produce the glue product described therein. Also prior to July 1st, 1907, I personally saw and helped said Frank G. Perkins test the process and product described in said application and glue together pieces of wood with glue made in accordance with the process described in said application. These pieces of wood which were glued together showed that the glue produced by said process had a remarkable tenacity and that the glue was very satisfactory for use in wood joint [fol. 1103] work. I also know of my own knowledge that the said invention described and claimed in said application has never been abandoned.

J. B. B. Stryker.

Subscribed and sworn to before me this 15th day of May, 1911. A. R. Place, Notary Public. Commission expires January 26, 1915. (Seal.)

[fol. 1104] 2-260

Div. 31, Room 169

Paper No. 14

Address only "The Commissioner of Patents, Washington, D. C." and not any official by name.

All communications respecting this application should give the serial number, date of filing, title of invention, and name of the applicant.

Department of the Interior,
United States Patent Office,
Washington, July 25, 1911.
Mailed " " "

Frank G. Perkins, care, Kenyon & Kenyon, 49 Wall St., New York, N. Y.:

Please find below a communication from the Examiner in charge of your application No. 460,737, Adhesives and Method of Making the same, filed Nov. 2, 1908.

E. B. Moore, Commissioner of Patents.

This case has been reconsidered in view of the amendment and affidavit of July 10, 1911.

It is thought that the case still contains an undue multiplicity of claims.

If it be granted that polymerization occurs in the starch molecules, as applicant has set forth, it is thought that the expression "to alter the polymerization of the carbohydrate," found in claim 1, is objectionable. If reference is to be made in the claim to polymerization the same should occur in the "whereby" clause or its equivalent.

On reconsidering the application it is noted that Higgins, 579,827, Mch. 30, 1897 (87-17, paste,) discloses the use of the same acid and the same alkali as is employed by [fol. 1105] the applicant, and that the proportions of these substances which he uses are within the limits of those laid down by the applicant in many of the present claims. Further, Higgins states that his product will draw or spin out in ropy or silky threads, and that it can not be distinguished by the ordinary observed from a fine glue. Accordingly, claims 4 and 16 are not seen to distinguish from Higgins.

Claim 8 is objectionable in that it contains no positive characteristic, defining the product merely by negative terms.

Claims like 9 to 12 and 20 are objectionable in that the distinguishing feature of the claim must follow "consists" and not be a part of the introductory clause, as is the expression "as distinguished from mucilages, sizes and pastes."

Again, claims 9 to 14 are not seen to distinguish from Higgins. The proportions given in claims 13 and 14 appear to be within the limits that are disclosed in the Higgins patent.

Claims like 24 and 29 are indefinite. In claim 24 the expression "a glue base" is of uncertain significance, and in claim 29 to simply call the product a "glue does not describe its physical properties with such clearness as to properly define the article.

Claims like 25 to 35, 37, 39, 41, 42 and 47 are not seen to distinguish from Higgins.

It is noted that claim 27 differs from former claim 51 in that the present claim uses the expression "three times that of cold water," whereas the former claim contained the expression "two times."

Claims 36, 38, 40 and 43 to 45 are for a joint. It is thought that this is not a statutory subject of invention. Even if it were these claims would be for subject matter divisible from that of the other claims. Division is there-
[fol. 1106] fore required between the above mentioned claims and the remaining ones.

It is noted that claim 36 includes elements not mentioned in the original specification.

Formal action on the merits is suspended pending compliance with the above requirement.

Ely, Examiner.

W. W. H.

[fol. 1107] Mail Room, Aug. 3, 1911, U. S. Patent Office

U. S. Patent Office, Received Aug. 4, 1911

Serial No. 460,737

Division 31, Paper No. 15

E

United States Patent Office

In re Application of Frank G. Perkins. Serial No. 460,737. Filed Nov. 2, 1908. For Adhesives and Method of Making the Same

49 Wall Street,
New York City, August 2, 1911.

Honorable Commissioner of Patents, Washington, D. C.

Sir: In response to the Official action of July 25th, 1911, please amend the above entitled application as follows:

Claim 1 line 3, cancel "to alter" and insert "hereby."

Same line, after 'carbohydrate' insert "is altered."

Claim 4 line 3, after 'chemicals' insert "below the bursting temperature of the starch."

Claim 8, line 1, cancel "prepared from starchy material and."

Same claim line 2, after "is" insert "prepared from starchy material, is."

[fol. 1108] Same claim, line 3, cancel "and," and insert a comma.

Same claim, at the end insert "and when suitably dissolved has substantially the properties of animal glue."

Claim 9, line 1, cancel "wood."

Same claim lines 1 and 2 cancel "as distinguished from mucilages, sizes and paste."

Same claim, at the end insert "such that a wood glue is formed, as distinguished from mucilages, sizes and paste."

Claim 10, lines 1 and 2, cancel "as distinguished from mucilages, sizes and pastes."

Same claim at the end insert "such that a glue is formed, as distinguished from mucilages, sizes and paste."

Claim 11, line 1, cancel "wood."

Same claim lines 1 and 2, cancel "as distinguished from mucilages, sizes and pastes."

Same claim, at the end insert "so that a wood glue is formed, as distinguished from mucilages, sizes and paste."

Claim 12, line 1, cancel "wood."

Same claims lines 1 and 2, cancel "as distinguished from mucilages, sizes and pastes."

Same claim, at the end insert "so that a wood glue is formed, as distinguished from mucilages, sizes and paste."

Claim 16, last line, before 'glue' insert "a."

Same claim after 'glue' insert "equal to animal glue."

Claim 20, lines 1 and 2, cancel "as distinguished from mucilages, sizes and pastes."

Same claim, at the end insert "as distinguished from mucilages, sizes and paste."

Claim 24 line 1, cancel "glue" and insert "carbohydate."

[fol. 1109] Same line, after 'base' insert "for making glue."

Claim 25 line 1, cancel "glue" and insert "carbohydrate."

Same line after 'base' insert "for making glue."

Claim 26 line 1, before 'glue' insert "making."

Claim 27, line 1, cancel "glue."

Same line, after 'base' insert "for making glue."

Claim 29 at the end insert "and having substantially the properties of animal glue."

Claim 30 line 3, correct the spelling of phenolphthalien."

Claim 47, at the end insert "and which glue has substantially the adhesive qualities of good animal glue."

Page 4 of the specification, line 18, after "130° F" insert "which is below the bursting temperature of the starch."

Remarks

From the Examiner's action we take it that he finds claim 1 objectionable for the reason that the claim should state the result accomplished, by a "whereby" clause. The claim has been amended as suggested, and it is therefore thought to now be clearly allowable.

The Examiner states that Higgins patent No. 579,827 discloses the use of the same acid and the same alkali as employed by applicant, in that the proportions of these substances which he uses are within the limits of those laid down by applicant in many of the present claims. While it is true that Higgins specifies the use of the same [fol. 1110] acid and also the use of the same alkali, nevertheless, Higgins uses his alkali for an entirely different purpose. Higgins uses his alkali merely to neutralize the acid. Higgins therefore forms neutral salts with his alkali and acid, which apparently have no material effect upon the starch, as far as its forming a glue is concerned.

Applicant takes a substantially neutral product and adds the alkali to dissolve the starch which is largely insoluble in water. Thus the action is entirely different in applicant's process and product from that in Higgins. The Higgins patent is not for the making of glue, but merely a paste, or mucilage, and his own specification bears this out. In lines 9 and 10 he states that the object of his invention is to produce an improved paste or adhesive compound. He says that it has much greater adhesive power and tenacity than any previous starch or flour paste. But this property is nothing more than that of a good mucilage. Ordinary mucilage has the same properties, as he states. All through his specification he calls it a paste and never

considers it as an equivalent of good animal glue. On page 4, lines 28 and 29 he states it can be readily substituted for glues and gelatins in many kinds of work, but this statement is also true of mucilages, as a good mucilage may be substituted for glue in many kinds of work. But this does not make it a glue as distinguished from mucilages, sizes and paste: The tenacity and adhesiveness of the two are greatly different. In lines 32 and 34 he states "glue like paste is produced which is almost equal to the best animal glues." This shows that it is not equal to the best animal glues, and since it is nothing but a paste or a mucilage it cannot be used for wood veneer work and similar purposes for which animal glue is used, even al- [fol. 1111] though it might be used for some purposes for which glue is used. We do not doubt that Higgins produced an especially good mucilage, but these statements show nothing more than that. The reasons why he did not get a good glue are undoubtedly many. One of them is undoubtedly that he did not use the proper kind of a base. He used corn starch, which is not suitable unless especially treated. Cassava has many advantages over corn starch. He, furthermore, did not treat his starch with caustic or dissolve it by caustic. His starch, as he says was dissolved by or rendered soluble by the acid. He particularly states that the caustic soda was only added to neutralize, and therefore, it was not the action of the caustic which dissolved the starch. Other differences in the two processes are of importance, and show that Higgins did not get the results of applicant.

On page 4, lines 36 etc., he states "it will unite with the wood nearly as firmly as gelatin, that is, the joint cannot be separated without breaking the wood at some point." This statement also clearly shows that Higgins did not produce a glue like animal glue. He admits that it unites wood to wood only "nearly" as firmly as gelatin does, admitting that it was far from the equivalent of an animal glue. He also states that the joint cannot be separated without breaking the wood at some point. This all indicates that his product was not at all the equivalent of animal glue. At a personal interview with the Examiner last April we believe it was clearly shown to him that applicant's product formed a wood to wood joint which could not be separated without

breaking the wood at many points, in fact, the wood was broken away over nearly the entire area of the joint. It is these results which make it equivalent to an animal glue. [fol. 1112] It is therefore clear that Higgins made nothing more than a very pure mucilage. He states, on page 4 lines 42 and 43, "This paste is of a pure creamy white." The fact that it is creamy white shows that it is not a glue, but a mere mucilage paste. We do not doubt that Higgins product will draw or spin out into ropy or silky threads. This is a property which is possessed by mucilages and pastes and even sizes, so that it is not especially characteristic of a glue. Another reason why Higgins does not get a glue equivalent to animal glue is undoubtedly that he bursts his starch by using a high temperature. He raises his temperature rapidly to about 195°. This is above the bursting or tumifying temperature of the starch. The starch must of necessity be bursted and largely rendered soluble. The fact that Higgins product might not be distinguished by the ordinary observer from a fine glue does not seem to us to be important, when it is clear from his specification that he does not make a fine glue. Undoubtedly one skilled in the art would easily distinguish it from a glue even from the ropy or silky threads. But, of course, any one would be able to distinguish it from a glue upon trying it out with a wood joint.

Claim 4 is for the making of a glue base. Higgins does not make a glue base, and therefore is not relevant to this claim. However, the claim has been amended to bring in the fact that the process is carried out below the bursting temperature, so that Higgins is clearly differentiating from.

Claim 16 is also clearly allowable over Higgins since it specifies that the viscosity, adhesiveness and cohesiveness is so proportioned as to form a glue equal to animal glue. Higgins does not so proportion the viscosity, ad- [fol. 1113] hesiveness and cohesiveness as to form a glue equal to animal glue. This is admitted by his own specification.

Claim 8 is objected to in that it contains no positive characteristic. This claim has been amended to include the positive characteristic that it is (1) a glue *base*, (2) prepared from starchy material, and (3) when suitably dissolved has substantially the properties of animal glue. It is therefore believed that the claim is now clearly allowable.

Claims 9 to 12, and 20, are held to be objectionable in that the distinguishing features must follow the word "consists." We believe that the claims are limited by the distinguishing feature, even if they do not follow the word "consists." However, since it appears to make no difference from our point of view we are amending these claims so as to put the distinguishing feature, as the expression "as distinguished from mucilages, sizes and paste," so that it follows the word "consists." We believe the Examiner clearly appreciates that with the claims so limited they are not in any way anticipated by Higgins. The above argument clearly shows they are not. Furthermore, these claims are clearly allowable over Higgins for other reasons.

Claim 9 specifies that the amylaceous material is dissolved "by means of an alkaline digesting agent." Higgins does not dissolve by means of an alkaline digesting agent, but by means of an acid. His caustic soda is merely used to neutralize, and does not dissolve the starch. In applicant's process it is the caustic which dissolves the starch, and the claim is so limited.

Claims 10 and 11 are similarly limited. Likewise, claim 12 specifies that the base is treated with "caustic alkali to [fol. 1114] dissolve." This clearly differentiates from Higgins who uses the caustic alkali merely to neutralize.

Claim 13 is clearly allowable over Higgins because it specifies treating of the starchy product "with a solvent of cellulose." Higgins does not treat the starchy product with a solvent of cellulose, but treats the acid with a solvent of cellulose merely. Nor is the weak acid he uses a solvent of cellulose. Furthermore, this claim is limited to the process adjusted to produce a glue having adhesive powers substantially as great as good animal glue. We have already pointed out that Higgins does not have this.

Claim 14 also specifies that caustic soda is added to dissolve the product. We have already pointed out that Higgins does not add caustic to dissolve the product at all; it is already dissolved before he adds his caustic soda.

Claims 24 and 29 are held to be indefinite. It is specified with respect to claim 24, that the expression "a glue base," is of uncertain significance. Claim 24 has therefore been amended to avoid this criticism, and claim 29 has been

amended so that the physical properties are described with sufficient clearness to properly define the article.

The Examiner states that claims 25 to 35, 37, 39, 41, 42, and 47, are not seen to distinguish from Higgins. It is believed that each of these claims are clearly allowable over Higgins. In the first place, with regard to claim 25, Higgins makes no glue base at all. He starts off with raw starch, apparently. Raw starch will not respond to the test mentioned in claim 25. It is therefore believed the claim is clearly allowable. Certainly the finished glue of Higgins will not respond to the test.

[fol. 1115] With regard to claim 26, this also specifies a definite article, in other words, a base for making glue. The only base which Higgins discloses is a raw starch, and this does not embrace treated amylaceous grains, the outer coating of which has been partially but not entirely converted.

Claim 27 also specifies a test to which Higgins raw starch paste will not respond. It is therefore thought this claim is clearly allowable over Higgins.

Claim 28 specifies cassava. It is clearly pointed out in the specification that cassava has special advantages over other forms of starchy material and for this reason the claim should be clearly allowable. It also specifies that the so-called cellulose of the grains be greater than in the natural material from which the base is derived. This is not found in Higgins.

Claim 29 likewise specifies cassava, and also specifies particular properties of the product which Higgins does not have. Higgins does not produce a glue having the properties of animal glue, as will be clear from the argument given above.

Claim 30 is differentiated from Higgins in that it specifies that the carbohydrate be "dissolved by a digesting agent alkaline &c." Higgins carbohydrate is not dissolved by an alkaline digesting agent, but by an acid, as clearly pointed out above.

Claim 31 is also clearly allowable over Higgins in that it specifies that the alkali metal hydroxide enters into "direct union" with the carbohydrate. Higgins does not disclose this. Higgins alkali metal hydroxide merely enters into direct union with the acid to neutral the same.

Claim 32 specifies that the grains be rendered semi-fluid [fol. 1116] "without acid." This clearly differentiates from Higgins.

Claim 33 also specifies that the carbohydrate be "dissolved by caustic" and contain free caustic. We have already shown that Higgins carbohydrate is not dissolved by caustic but by acid.

Claim 34 also specifies that the carbohydrate be dissolved by caustic soda or its equivalent. Acid is not an equivalent for dissolving a carbohydrate.

Claim 35 is similarly limited.

Claim 37 specifies that carbohydrate be "dissolved by solvent of cellulose," but the weak acid used by Higgins is not a solvent of cellulose.

Claim 39 and also claim 33, specify a glue as distinguished from mucilages, sizes and pastes, which Higgins does not show. Furthermore, claim 39 specifies that the starchy base shall be "dissolved by solvent of cellulose." As already pointed out this is not shown by Higgins.

Claim 41 also specifies a glue having as good adhering qualities as the best animal glue. We have already pointed out that Higgins does not show this.

Claim 41 should be allowed for the same reasons.

Claim 47 has been amended to more clearly distinguish applicant's invention from Higgins, and it now specifies a glue having properties which Higgins product does not.

It is therefore believed that all of these claims are clearly allowable.

In this respect we desire to state that this Higgins patent was very carefully considered before the submission of these claims, and since it is clear that Higgins does not produce a glue product at all similar to applicant's, it is believed the claims are clearly allowable.

[fol. 1117] With regard to the criticisms in respect to claim 27, in which the Examiner states that it uses the expression "three times that of cold water," whereas former claim 51 contained the expression "two times," we desire to state that present claim 27 merely states that it shows a viscosity between "that of cold water and three times that of cold water," and in this respect it is like former claim 54.

With regard to claims 36, 38, 40 and 43 to 45, the Examiner states that it is thought that these claims which are for a joint, are not a statutory subject of invention. We are unable to perceive any reason why they are not the subject of invention. They are obviously for a product which has great utility, and products and manufactures like this are most common statutory subjects of invention. The Examiner further states that even if it were these claims would be for subject matter divisible from that of the other claims, and accordingly, the Examiner requires division. We submit that action on the merits should not be suspended pending a compliance with the requirements for division, as in this case under the rules, division should not be required, but if the Examiner considers that the claims last mentioned should be divided out he should reject them for that reason, since applicant presented the other claims first, and inserted these by amendment. We therefore request that the Examiner give us full action on the merits, in his next action. We, however, submit that division should not be required between the claims mentioned and the remaining claims. It was stated in ex parte Dallas, 106 O. G. 996, that where the process set forth in some claims necessarily produces the product set forth in others, and there is a close relationship between them, although it is possible [fol. 1118] that the product may be made by other processes, held that the claims may be retained in one application, if no wider range of search is required. To this same effect is Adams, 106 O. G. 541.

It will be observed that whenever applicant's particular form of process as stated in his specification, is carried out and put into use, as upon wood, the wood joint claimed is bound to be the resulting product. It therefore seems to us clear that division should not be required in this case as the claims are obviously closely related.

With regard to the criticism of claim 36 in that it includes elements not mentioned in the original specification, we beg to state that although in claim 36 the particular elements mentioned were not stated in the original specification in the exact words given, nevertheless, they were impliedly so stated, because whenever the particular glue described was put to use in a wood joint, it was bound to produce the alkali metal carbonate, bicarbonate and acetate,

and in the quantities mentioned. These compounds undoubtedly result from the inclusion of the free caustic in the glue. It will therefore appear that although the new product, the resulting glue joint, was not particularly described in the original specification, nevertheless, amply sufficient information was given in the origial specification to produce that product, and in fact if the original specification was carried out it would be bound to produce this product, namely, the resulting glue joint, with the carbonate, bicarbonate and acetate therein. The inclusion of these terms now is merely more clearly specifying what was already included in the original specification. The original specification obviously contained sufficient information to enable one to produce the particular product described in [fol. 1119] claim 36, and in fact, described a process which was bound to produce that product. Such being the case, we believe there can be no objection to the claiming of that product in detail now, and that claims to it should not be divided out but should be included in this application.

Applicant's attorneys desire to make the number of claims as small as possible, and have gone over the same with that in view, but are unable at present to see how the number can be cut down without prejudicing the case unduly. It is believed that all of the claims are materially different in scope, and therefore all should be allowed in the case.

In view of the above a reconsideration and favorable action on the case is earnestly solicited.

Respectfully submitted.

Kenyon & Kenyon, Attorneys for Applicant.

[fol. 1120]

2-260

Div. 31, Room 169

Paper No. 18

Address only "The Commissioner of Patents, Washington, D. C." and not any official by name.

All communications respecting this application should give the serial number, date of filing, title of invention, and name of the aplicant.

AHS.

Department of the Interior,
United States Patent Office,
Washington, Aug. 31, 1911.
Mailed " " "

Frank A. Perkins, c/o Kenyon & Kenyon, 49 Wall St., New York City:

Please find below a communication from the Examiner in charge of your application No. 460,737, filed Nov. 2, 1908, Adhesives and Method of Making the Same.

E. B. Moore, Commissioner of Patents.

Responsive to amendment filed Aug. 3, 1911.

Claims 36, 38, 40 and 43 are for a joint. This is subject matter that cannot be properly classified under class 87-17, the sub-division under which the subject matter of the remaining claims is properly classifiable. The requirement for division is thought, therefore, to be correct and is repeated. Further, ex parte Pickles, 100 O. G. 1888, states in substance that when division is required it must be settled before the Office will examine on the merits. In accordance with the ruling in the above case, action on the merits is deferred until the requirement for division is complied with.

Ely, Acting Examiner.

W.W.H.

[fol. 1121] Mail Room, Sep. 6, 1911, U. S. Patent Office

U. S. Patent Office, Received Sep. 11, 1911

Seiral No. 460,737

Division 31, Paper No. 17

F

United States Patent Office

In re Application of Frank G. Perkins. Serial No. 460,737. Filed November 2, 1908. For Adhesives and Method of Making the Same

49 Wall Street, New York City, September 5th, 1911.

Honorable Commissioner of Patents, Washington, D. C.

Sir: In response to the Official action of August 31st, 1911, please amend the above entitled application as follows:

Cancel claims 36, 38, 40, 43, 44, and 45.
Adjust the ordinals of the remaining claims.

Remarks

The above amendment cancels the claims held by the Examiner to be classified in another class, and which he required to be divided out.

The above, we believe, complies in full to the Examiner's requirement, and in view thereof a reconsideration and favorable action on the merits is earnestly solicited.

Respectfully submitted.
Kenyon & Kenyon, Attorneys for Applicant.

[fol. 1122] 2-260

Div. 31, Room 169

Paper No. 19

Address only "The Commissioner of Patents, Washington, D. C." and not any official by name.

All communications respecting this application should give the serial number, date of filing, title of invention, and name of the applicant.

Department of the Interior,
United States Patent Office,
Washington, Sept. 22, 1911.
Mailed " " "

Frank A. Perkins, Care Kenyon & Kenyon, 49 Wall St., N. Y.:

Please find below a communication from the Examiner in charge of your application Ser. No. 460,737, filed Nov. 2, 1908, for Adhesives and Method of Making the Same.

E. B. Moore, Commissioner of Patents.

This is in response to amendment filed Sept. 6, 1911.

Claims 1 to 3 contain no positive step that differentiates them from one another. The attempted differential ion is based upon a result that is attained. Further in claim 1 this result is hypothetical. The positive step of treating cassava carbohydrate with water and suitable chemi-

cals is so indefinite as to be unpatentable. Claims 1 to 3 are therefore rejected.

In claim 8 the expression "suitably dissolved" added by amendment is indefinite since water alone will not dissolve the glue base and the expression by itself does not imply the use of any solvent other than water. The claim is rejected.

[fol. 1123] A process claim which distinguishes from the prior art only in a statement of definite alleged results obtained is not so phrased as to render it allowable. Claim 9 is open to this objection and is accordingly rejected.

As understood the cassava must be modified before the alkali treatment is effective so as to produce the glue. Claim 10 is incorrect in that it appears to set forth that unaltered cassava when treated with caustic alkali would give the glue product, and is accordingly rejected.

Claim 15 is rejected as incomplete since the treatment of the modified carbohydrate with water alone is insufficient to complete the process.

Claims 16 and 19 are rejected as incomplete on the grounds similar to that pointed out in claim 15.

Where is the warrant for the inclusion of the expression "alkali earth metal hydroxide" in claim 18?

If a patent is granted and some one should infringe by putting on the market an alleged infringing product in order to sustain the patentee's contention his product claims must be defined in such terms that his product itself would carry its own marks of identification by which the competing product could be determined to be an infringing product. It is not seen that the applicant has defined his product by such distinguishing marks as could be relied upon in proving an infringement. In claim 29 for example what is there in the definition of this claim by which the product itself could be distinguished so as to identify other products as infringing. Again some of the product claims are defined in large part by the process of making as claims 25, 27, 30 etc. This is objectionable. Other product claims are defined in part upon and hypothesis as claim 26. Still [fol. 1124] others are defined in part upon an alleged superiority as claim 28. Regarding this latter method of distinction it would not be proper to define a motor as having a higher horse power per pound of weight than any

heretofore made neither is it proper to define a product as possessing an alleged desirable or superior characterist-*s*. Note the expression in this claim "greater than in the natural material." Still again it is to be noted that in claim 37 for example the definition is based upon characterist-s of the product that *is* no longer existant, in other words upon characteristics that belong to an intermediate product.

Claims 24 to 39 and 41 are rejected upon the grounds above stated.

The inconsistency in claim 27 with reference to the expression "three times" pointed out in the Office letter of July 25, 1911, has not been corrected.

Ely, Examiner.

W.W.H.

[fol. 1125] Mail Room, Oct. 24, 1911

U. S. Patent Office, Oct. 25, 1911

Serial No. 460,737

U. S. Patent Office, Division 31

Paper No. 19

G

United States Patent Office

In re Application of Frank G. Perkins. Serial No. 460,737. Filed Nov. 2, 1908. For Adhesives and Method of Making the Same

49 Wall Street,
New York City, October 21st, 1911.

Honorable Commissioner of Patents, Washington, D. C.

SIR: In response to the official action of September 22, 1911, please amend the above entitled application as follows:

Page 13 of the substitute specification, line 7.

After 'compound' insert "except as clearly specified in the appended claims."

Same line, after 'many' insert "modifications and."

Same page, line 8, after 'invention' insert "with respect to one particular embodiment thereof."

Claim 1, lines 2 and 3, cancel "suitable chemicals" and insert "acid or its equivalent."

Claim 2, line 2, cancel "suitable chemicals" and insert "acid or its equivalent."

Claim 3, line 3, cancel "suitable chemicals" and insert "acid or its equivalent."

Rewrite claims 8 and 9 as follows:

[fol. 1126] Sub. H[1]

G[1]. "8. A glue base characterized by the facts that it is prepared from starchy material, is not soluble as soluble starch (giving clear solutions in hot water), that it is not a modified starch [Cls. 8, 9.]* (swelling and gelatinizing in cold water), and when dissolved by a solvent thereof has substantially the properties of animal glue.

9. The process of making glue which consists in dissolving an amylaceous material by means of an alkaline digesting agent and water, the amount of water being such that a wood glue is formed as distinguished from mucilages, sizes and paste."

[Matter enclosed between rules erased in copy.]

Claim 15, line 1, cancel the first word "The" and insert "In The."

Same line, cancel "which consists" and insert "the combination of the following steps."

Same claim, line 2, cancel "in."

Same claim, lines 5 and 6, cancel "to produce a glue for application."

Claim 16, line 1, change "The" to "In the."

Same line, cancel "which consists" and insert "the."

Same claim, line 2, cancel "for."

Same line, after 'agitating' insert "of."

[*Words and figures enclosed in brackets erased in copy.]

Claim 18, line 5, cancel "alkali earth metal hydroxide" and insert "its equivalent."

Claim 19, line 1, change the first word "The" to "In the."

Same line, cancel "which consists" and insert "the combination of the following steps;"

Same claim, line 2, cancel "in."

[fol. 1127] Remarks

We call the attention of the Office to the fact that the last two actions on the Office have been addressed in the name of "Frank A. Perkins" instead of "Frank G. Perkins," the latter being the inventor's correct name.

The Examiner criticises claims 1 to 3, stating they contain no positive step that differentiates them from one another. It will be noted that claims 1 and 2 are limited to cassava, while claim 3 is not. This makes claim 3 materially different in scope from claims 1 and 2, so that we submit the criticism does not apply to claim 3.

Claim 2 we believe is materially different in scope from claim 1, in that it specifies that a material portion of the carbohydrate be left insoluble in water. Of course it is true that as applicant alters the polymerization as is done in the preferred embodiment of the invention, a material portion is left insoluble in water. Nevertheless, we believe applicant is entitled to a claim with this limitation specifically set forth in the language of claim 2, and to have such a claim even although a claim is in the case which is limited by the statement that the polymerization is altered. As the claims read, the result obtained is necessarily a part of the process, and the process must be carried out so that substantially the result stated in the claims will be obtained, or otherwise the claim will not cover the process, that is, these statements which the Examiner terms statements of result, we submit, are limitations in the claim, and if they differ in scope it means that the claims differ in scope. We therefore believe, as far as these criticisms are concerned, that claims 1 to 3 are clearly allowable.

[fol. 1128] The Examiner states that in claim 1 this result is hypothetical. We assume that by this the Examiner

means the same criticism he raised in the official action of April 29th, 1911, where he stated that some of the claims are drawn to theories not capable of demonstration, as the theory of polymerization. We answered this criticism in our amendment of July 8th, 1911, and pointed out on pages 17 and 18 that such claims ought to be clearly allowable. We believe the Examiner, on considering a claim which specified a hydrate in solution would not hold that it was hypothetical. Claim 1 is no more hypothetical, we believe, than a large number of claims drawn to chemical products or compositions of matter, most of which specify the compounds, as of a certain molecular aggregation, which is just as hypothetical and difficult of proof as applicant's statement of polymerization, in fact, we believe, more so. We refer the Examiner to our statements in this regard in the amendment of July 8th, 1911, and believe that with the explanation there given, he will consider claim 1 allowable, as far as this point is concerned.

The Examiner further states that the positive step of treating cassava carbohydrates with water and suitable chemicals is so indefinite as to be unpatentable. We do not see that there can be anything indefinite with respect to cassava carbohydrate, and we do not see that there can be anything indefinite with regard to the term "water." We therefore assume that the indefinite term which the Examiner has in mind is the term "suitable chemicals." In each of claims 1 to 3 we have amended this term so that we believe the Examiner will no longer criticise them on this point. But even with this amendment we believe the claims are of substantially the same scope as before. We do not [fol. 1129] quite clearly see why the term "suitable chemicals" should be indefinite, but with the amendments to these claims we believe there can be no criticism thereof. It is therefore believed that claims 1 to 3 are clearly allowable as amended.

Claim 8 is criticised in that the expression "suitably dissolved" is indefinite, the Examiner stating "since water alone will not dissolve the glue base" this claim has been rewritten so that it is believed the Examiner's criticism is entirely avoided. Of course, if water would dissolve the material under some conditions it would be a solvent thereof.

We are not quite clear as to the exact meaning of the Examiner's criticism of claim 9. However, this claim has been rewritten and slightly amended so that we believe it is now in a form acceptable to the Examiner.

Claim 10 is criticised as incorrect, the Examiner stating that it appears to set forth that unaltered cassava when treated with the caustic would give the glue product, and that the cassava must be modified before the alkali treatment is effective to produce a glue. In this regard we beg to state that it has been found that with some particular grades of raw unaltered cassava a product of some value may be obtained without first subjecting it to the treatment of the first step. It has been found, however, that without giving it the preliminary treatment the resulting glue product is very unreliable, and the results are not so satisfactory from a commercial standpoint as when the cassava is treated with the first step. With the above explanation we believe that the Examiner will see that claim 10 is correct as it stands.

[fol. 1130] Claim 15 is rejected as incomplete, on the ground that the treatment of modified carbohydrate with water alone is insufficient to complete the process. In this respect, we believe that applicant is entitled to a claim covering only a portion of the steps of the process, if such portions have any suitable novelty. In other words, if one has a process consisting of three steps he may have a claim covering only two of those steps, or in fact only one of those steps, if such contain the necessary patentable novelty, and such claims are not objectionable on the ground that the product would not be produced until all of the steps were carried out. We further believe that such a claim covering one or part of the steps validly, covers these steps whether or not they are used in conjunction with the remaining steps or whether or not it is found necessary to use the remaining steps not mentioned in the claims. We believe that one is entitled to claims of this character just as well as one is entitled to sub-combination claims in a machine application. Claim 15 has been amended so that we believe it falls clearly in line with the above argument.

The Examiner rejects claims 16 and 19 on similar grounds, and these claims have both been amended, and we believe, are both clearly allowable for the same reasons.

The Examiner asks where is the warrant for the inclusion of the expression "alkali earth metal hydroxide" in claim 18. We believe that the specification gave ample warrant for the inclusion of this term, but we have stricken out this expression from the claim and inserted what we believe an equivalent expression, but which is not open to the criticism of the Examiner, and we therefore believe [fol. 1131] that the claim as it now stand is clearly allowable.

The Examiner states that product claims must be defined in such terms that the product would carry its own marks of identification by which a competing product could be determined to be an infringing product. We believe this statement is too broad, and that while it may be true with respect to some inventions, it certainly is not true with regard to all inventions, and we believe it is not true with regard to the present invention. We give below cases in which the courts have passed upon claims similar in character to applicant's claims, and in which no criticism whatever has been made upon the ground stated by the Examiner. The Examiner refers to claim 29, for example, and asks what is there in the definition of this claim by which the product itself could be distinguished so as to identify other products as infringing. In the first place the claim calls for a glue. We believe that one skilled in the art of glue making, or the use of glue, would have no trouble in determining that a certain product was a glue, especially if he saw it used for the common purposes for which glue is used. The next limitation in the claim is that it comprises cassava carbohydrate. While of course it might be difficult by merely looking at the glue to determine whether or not it contained cassava carbohydrate, yet the ordinary chemist's analysis would determine whether or not it comprised a carbohydrate, and such chemist's analysis is most often used, and is a proper means for determining whether a product contains certain elements, or the elements called for by a patent claim. The proof of the use of a cassava, while it might be difficult to obtain is nevertheless, very readily possible. It is probable that in most cases minute [fol. 1132] quantities of the cassava which have not been dissolved will be found in the joint, and a microscopic examination of this will probably give good evidence of cassava

if cassava be used. The testimony of parties who made the glue, or saw it made, could be obtained, and this testimony, together with testimony showing where the base originally came from, would very clearly prove that the glue comprised cassava carbohydrate. The next limitation is that it be rendered semi-fluid. We do not see any particular difficulty in determining this as any one skilled in the art could determine, we believe, even at a glance, that the glue was semi-fluid. That it was rendered so by digestion could also be proved by the testimony of those who manufactured it. The further limitation that it have substantially the properties of animal glue could readily be ascertained by tests for that purpose, made by one skilled in the art. Such tests as these often have to be resorted to in determining whether an article infringes a product claim, and also testimony as to the actual process carried out in making the product, has to be given in order to determine just what the product is. We know of no case where the courts have refused to admit such testimony for any such reason as given in the Examiner's action.

The Examiner further states that again, some of the product claims are defined in a large part, by the process of making, as claims 25, 27, 30 &c., and this is objectionable. We agree with the Examiner that if the actual invention of a product can be fully and sufficiently set forth to amply cover the invention by terms which do not specify the process by which the product is made, then such method of claiming the invention is the proper one. But we further submit that it is the well settled practice of the Office that [fol. 1133] when an invention cannot be adequately covered by a product claim without bringing in certain elements of the process by which it was made, then it is perfectly proper to recite such elements of the process in the product claim.

Away back in the 90's Commissioner Simonds came to this conclusion, and stated that when a man has made an invention his right to a patent for it, or his right to a claim properly defining it, is not to be determined by the limitations of the English language.

Claims similar to applicant's have been before the court many times, and we know of no case in which a claim has been held invalid or objectionable for this reason.

In Pickhardt et al. vs. Packard et al., 22 Fed. Rep. 530, the Court considered a product claim which defined the product both by its chemical composition and the manner and materials from which it was obtained. This claim, which was sustained, was as follows:

"As a new manufacture, the coloring matter, or sulpho-acid of dinitro-alpha naphthol, obtained from the action of nitric acid upon the within-described alpha-naphthol sulpho-acids, substantially in the manner set forth, or by any other method which will produce a like result."

In other words, the product was defined in part by its chemical composition, in part by the materials from which it was obtained, and in part by the process by which it was obtained. We know of no case in which any objection was made to such a claim on the grounds stated by the Examiner.

[fol. 1134] In the case of Badische Anilin & Soda Fabrik vs. Kalle et al., 94 Fed. Rep. 163, the Court considered several claims also similar to applicant's, the first claim stating that the article of manufacture resembled indigo, just as applicant's claims state that applicant's product has the properties of animal glue. These claims were sustained by the Court of Appeals and were as follows:

"(1) As an article of manufacture a coloring matter lake resembling indigo in color, which can be obtained by combining a soluble safranineazo-naphthol body with a tanno-metallic mordant and which is very fast to light and washing; upon suitable reduction it shows the reactions of safranine, upon treatment with caustic soda it shows the reactions of tannin and it contains a metal, substantially as described.

(2) As an article of manufacture, the hereindescribed blue dyestuff which can be obtained from a safranine-azo-naphthol and which may be recognized by the following characteristics: It is soluble in water, upon reduction with stannous chloride and hydrochloric acid, amido-naphthol is produced and upon reduction with zinc dust and acetic acid a safranine is produced, substantially as described.

(4) The specific blue coloring matter (obtainable by rendering the safranine-azo-beta-naphthol hereinbefore mentioned soluble in water) which possesses the following char-

acteristics: It is soluble in water, gives a blackish-green solution in sulphuric acid and on reduction gives alpha-[fol. 1135] amido-beta-naphthol and safranine proper, all substantially as described."

The claims before the court further specified the method of obtaining the product and certain tests which could be applied to it to indicate that it was the product. If these limitations in these claims conform to the rules laid down by the Examiner, then certainly applicant's claims do. We believe, however that although the general rule is as stated by the Examiner, i. e., a product should not be claimed by the process of making it, nevertheless this case falls within the exception, as many other cases have before, and that claims 25, 27, 30 &c., are clearly allowable as they stand.

We had thought that the claims to the joint would describe the resulting product in terms such that it would be easy to prove infringement of them, and in terms which did not refer to the process, but the Examiner has held that the joint is an independent invention, by his requirement for division, so that we believe that the only language left in which to describe the invention of the product is that used in the present product claims.

The Examiner states that other product claims are defined in part upon an hypothesis, as claim 26. We assume that the Examiner is referring to the statement in claim 26 that the so-called amylo-cellulose coating has been partially but not entirely converted. We believe that the claim is not objectionable for this reason, and that the claim is not defined in part upon an hypothesis any more than the claims before the courts in the above mentioned cases.

Our argument above with regard to claim 1, and the results of chemical analysis and tests which have been before submitted to the Examiner, we believe, show that the claim [fol. 1136] is clearly allowable.

The Examiner states still other claims are defined in part upon an alleged superiority, as claim 28. We are unable to see that claim 28 is in any way based upon an alleged superiority. The Examiner is apparently referring to the statement that the proportion of cellulose is greater than in the natural material. This is a statement of actual content of the product, and we are unable to see that it is in any way a statement of superiority. If a claim specified that it had

more than a certain percentage of a certain ingredient, we believe the Examiner would not hesitate to hold that it was proper in form as far as this point is concerned. Applicant's claim is just such a claim, the phrase in question merely defining the amount of so-called cellulose in the resulting product. The Examiner's illustration with respect to a motor having a higher horse power &c. may be correct, but we believe it is not analogous to applicant's case, and does not apply to claim 28.

The Examiner notes that in claim 37 the definition is based upon characteristics of the product that are no longer existent. Of course this is true, but we believe it is perfectly proper to define the product in this way, especially in view of the cases above cited. We believe that a claim specifying in combination with other elements, a product having therein granulated sugar and water would be a proper claim if the use of granulated sugar was an important feature in the invention. It would, however, be true that immediately the granulated sugar was placed in the water it would no longer be granulated. In the same way, a particular composition of matter might be described as composed of yellow paint and blue paint, with other materials, and yet when mixed together neither of the paints [fol. 1137] would remain yellow or blue. We therefore submit that claim 37 is clearly allowable.

For the reasons above given we believe that claims 24 to 39, and 41, which were rejected upon the grounds stated, are clearly allowable.

The Examiner states that the inconsistency in claim 27, with reference to the expression "three times," has not been corrected. We pointed out in our amendment of August 2nd that claim 27 merely states that it shows a viscosity between that of cold water and three times that of cold water, and in this respect it was like former claim 4. We do not now see that there is any inconsistency in claim 27, and if the Examiner still adheres to his criticism we ask him to more clearly point out the same.

In view of the above a reconsideration and favorable action on the case is earnestly solicited.

Respectfully submitted.

Kenyon & Kenyon, Attorneys for Applicant.

[fol. 1138] Div. 31, Room 169

2-260

Paper No. 20

Address only "The Commissioner of Patents, Washington, D. C." and not any official by name.

All communications respecting this application should give the serial number, date of filing, title of invention, and name of the applicant.

Department of the Interior,
United States Patent Office,
Washington, Nov. 11, 1911.
Mailed " " "

Frank G. Perkins, Care Kenyon & Kenyon, 49 Wall St., New York, N. Y.:

Please find below a communication from the Examiner in charge of your application No. 460,737, Adhesives and Method of Making the same, filed Nov. 2, 1908.

E. B. Moore, Commissioner of Patents.

This case has been reconsidered in view of the amendment of Oct. 24, 1911.

Claim 1 is still objectionable in the reference to polymerization in the "whereby" clause. Claims 1-3 are all objectionable in the expression "acid or its equivalent." What is the equivalent of an acid and where in the specification is there warrant for the claimed equivalency? Claims 1-3 are again rejected.

In claim 8 the statement of distinctions over the references by means of negative characteristics is objectionable. The claim is again rejected.

The criticism of claim 9 in the last office letter was intended to convey the idea that process claims must differentiate from the prior art (in this case the Higgins [fol. 1139] patent, for example) by difference in steps, which steps are necessary to produce the desired product. As drawn, this claim has no steps as distinguished from Higgins, and the rejection of the claim is repeated.

Where in the original specification is the warrant for a claim involving the formation of applicant's product without the preliminary treatment of the material with acid? The statement found on page 8 of the substitute specifi-

cation on this point should apparently be cancelled as involving new matter. Claim 10 is rejected on the ground of new matter.

It is not seen that the steps recited in claims 15, 16 and 19 are sufficient to produce the glue claimed. These claims still appear incomplete and even if it were granted that the steps are novel that is insufficient to warrant patentability, since their novelty must be supported by utility. These claims are again rejected.

Applicant has apparently only established that the alkalies are capable of dissolving the glue base to form the glue. Accordingly the expression "a solvent of cellulose," used in claims 25, 36 and 37, is too broad under the doctrine set forth in the case of Matheson v. Campbell, 79 O. G., 686, which doctrine has been recently upheld in re Dosselman & Neyman, 167 O. G., 983. These claims are therefore rejected on the above noted decision.

Applicant is not seen to have overcome the ground on which claims 24 to 39 and 41 were rejected in the last office letter, and this rejection is therefore repeated.

Ely, Examiner.

W. W. H.

[fol. 1140] Application Room, Nov. 24, 1911, U. S. Patent Office

U. S. Patent Office, Received Nov. 28, 1911

Division 31, Paper No. 21

Serial No. 460,737

H

In the United States Patent Office

In re application of Frank G. Perkins. Serial No. 460,737. Filed Nov. 2, 1908. For Adhesives and Method of Making the Same

#49 Wall Street,
New York, Nov. 23, 1911.

Hon. Commissioner of Patents, Washington, D. C.

Sir: In response to the Official action of November 11th, 1911, please amend the above entitled case as follows:

Page 3, line 18, after "diluted" insert the following:

H'. The reagent I use I call a starch converting agent because it is believed it exercises, at least in part, a hydrolizing or oxidizing or converting action similar to that of the well known starch converting agents many of which have been used to convert starch into soluble starch and dextrin. I may use any suitable starch converting agent but the action I produce is preferably much less complete since it is not my object to convert the starch wholly but only to effect its physical properties when put into solution or dissolved to form glue.

Page 5, line 5 from the bottom, change "o" to and.

[fol. 1141] Page 3, line 22, change "carbohydrate" to starch.

Page 9, line 2, cancel "or potato."

Page 5, lines 6 and 7, cancel "to very material extent if not altogether."

Page 5, line 5, cancel "into soluble starch or."

Page 9, line 5, after "carbohydrate" insert and with other starches and conversion products (starchy carbohydrates).

Page 12, line 18, after "use" change the period to a comma same line, cancel "I have found."

Same page, line 19, after "surfaces' change the period to a comma: same line, change "Its" to its: line 24, after "viscosity" insert is lasting and

Page 10, cancel lines 22, 23, 24 and 25 and insert the following:

H". Cls. 1-3, 8-10, 15-16, 19, 31

The carbohydrate glue base in the preferred form retains substantially unchanged the size and general form of particle as viewed under the microscope when treated with cold water, and produces opalescent cloudy solutions with water at 200° F.

Page 5, line 4, from the bottom, after "use" insert the following: but such other starches or starchy products may be used with more or less success.

Page 5, line 14, after "yielded" insert The batch therefore has not been converted into dextrin.

Page 5, line 15, after "acids" insert as well as other starch converting agents.

Page 12, line 17, cancel "My" and insert In the preferred form described my.

Page 8, line 2, cancel "traces of."

Rewrite claims 1, 2, 3, 8, 9, 10, 15, 16 and 19 as follows:

H³. 1. The process of making a glue base which con- [fol. 1142] sists in agitating cassava carbohydrate with water and a starch converting agent whereby the polymerization of the carbohydrate is altered to a point such that when dissolved it will form a viscous semi-fluid unjellified product adapted to be applied by machinery.

2. The process of making wood glue which consists in taking suitable carbohydrate material and properly proportioning the viscosity, cohesiveness and adhesiveness of the carbohydrate material resulting when it is dissolved to form glue applicable by machinery and then dissolving the carbohydrate material with a solvent of cellulose to put it into solution to form glue.

3. The process of making a glue base which consists in agitating a starchy carbohydrate with water and a starch converting agent to decrease the water absorptive properties of the carbohydrate to properly proportion the viscosity, adhesiveness and cohesiveness resulting when the base is dissolved to form glue properly for the application of the glue by machinery.

H⁴. 8. A glue base characterized by the facts that it is prepared from starchy material, retains substantially unchanged the size and general form of particle when treated with cold water, and produces opalescent cloudy solutions with water at 200° F.

9. The process of making glue which consists in treating starch below the bursting temperature of the starch, with a digesting agent such as caustic and water until the materials assumes a viscous

semi-fluid consistency adapted to be applied by machinery.

10. The process of making glue which consists in dissolving cassava carbohydrate in caustic alkali until a glue is formed as distinguished from muci- [fol. 1143] lages, sizes and pastes.

H[5]. 15. In the process of making wood glue, the combination of the following steps, agitating a starchy carbohydrate with a digesting agent to decrease its water absorptive properties without converting the batch into dextrin, and then substantially dissolving the product thus produced with about three parts or less of water until the resulting product has a consistency such that it is applicable to glue up veneers.

16. In the process of making wood glue, agitating a starchy carbohydrate with a digesting agent until a sample of the material taken from the batch and dissolved will show a viscosity, adhesiveness and cohesiveness substantially equal to animal glue.

H[6]. 19. In the process of making wood glue, the combination of the following steps, agitating a cassava carbohydrate with a digesting agent to decrease its water absorptive properties without rendering the carbohydrate materially soluble in cold water and then putting the product thus produced into a solution containing about three parts or less by weight of water to produce a glue for application.

[Matter enclosed between rules erased in copy.]

Claim 4, line 2, cancel "or its equivalent."

Claim 6, line 2, cancel "or its equivalent."

Claim 11, line 3, cancel "or its equivalent;" line 4 cancel "soda or its equivalent" and insert alkali; line 7 cancel "soda used" and insert alkali used, calculated as NaO H; lines 8 and 9, cancel "or the equivalent weight of its equivalent."

Claim 12, line 3, cancel "or its equivalent."

[fol. 1144] Claim 17, line 6, cancel "caustic soda solution or its equivalent" and insert a solvent of cellulose.

Claim 18, line 2, cancel "or its equivalent."
Claim 20, line 3, cancel "or its equivalent."
Claim 22, line 2, cancel "or its equivalent."
Claim 23, line 2, cancel "or its equivalent."
Cancel claims 24, 38 and 41 and adjust the ordinals of the remaining claims.
Claim 29, former claim 30, line 3 before "about" insert in; line 2, cancel "or its equivalent."
Claim 30, former claim 31, line 2, cancel "direct."
Rewrite former claim 32 as 31 as follows:

H[7]. 31. A wood and fiber glue containing amylaceous material as a base dissolved without acid in about three parts of water or less, and being viscous, semi-fluid and unjellified.

Claim 32, former claim 33, lines 2 and 3, cancel "or its equivalent."
Claim 33, former claim 34, line 3, cancel "or its equivalent" and insert alkali.
Claim 29, former claim 30, line 1, cancel "a starchy carbohydrate" and insert starch.
Claim 12, line 3, cancel "a starchy carbohydrate" and insert starch.
Claim 18, line 5, cancel "or its equivalent."
Claim 22, line 3, change "and" to with.
Claim 17, line 2, cancel "a starchy carbohydrate or its equivalent," and insert starch.
Claim 17, line 5, before "water" insert cold.
Claim 34, former claim 35, line 3, cancel "soda or its equivalent" and insert alkali.
Claim 35, former claim 36, lines 1 and 2, cancel "or its equivalent."
Claim 36, former claim 37, line 3, cancel "or its equivalent."
[fol. 1145] Claim 37, former claim 39, line 2, cancel "or its equivalent and caustic alkali" and insert solvent of cellulose.
Claim 38, former claim 40, lines 4 and 5, cancel "caustic soda or its equivalent" and insert an alkali; line 6, before "viscosity" insert lasting.
Claim 4, at the end, insert applicable by machinery.

Remarks

An interview has been had with the Hon. Examiner in which the Examiner's objections to the claims rejected have been thoroughly discussed.

With regard to claim 1, we understand from the Examiner's statements that the objection to "polymerization" in the "whereby" clause is that it is insufficient to indicate to what extent the process is carried. We have amended the claim to make it clearly indicate that the extent to which the process is carried is to a point characterized by a certain test. We understand from the Examiner that the limitation of the claim to such a test would be satisfactory.

With regard to the objections to claims 1 to 3, concerning the phrase "acid or its equivalent" we explained that the original specification stated that a suitable reagent which would decrease the water absorptive properties might be used. The original pages also stated that "many substitutes may be found" and contained claims drawn broadly to such a reagent, and at that time it was well known and clearly set forth in the literature that certain alkalies, acids, salts and elements affected starch in a similar way to sulphuric acid. Other acids besides sulphuric, mixtures of acids and alkalies had been used by applicant before the application was filed and applicant's [fol. 1146] co-pending application Serial No. 460,738, shows that applicant's contemplated the use of alkaline agents and sodium peroxide. The Examiner thereupon suggested that the term "starch converting agent" be used and claims numbers 1 and 3, have been amended accordingly, and claim 2 rewritten.

Claim 8 was objected to as including negative distinctive characteristics. Phrases specifying the characteristics in question by positive statements were submitted to the Examiner which appeared to be acceptable to him and these equal restrictions in positive form have been substituted in the claim.

With regard to claim 9 we understand the Examiner's objection to be that it does not distinguish from Higgins by difference in steps. We believe that the claim as amended now clearly distinguishes from Higgins, 579,827,

by difference in steps, since Higgins does not treat starch with caustic at all but only neutralizes the acid with the caustic. Furthermore Higgins does not treat with caustic below the bursting temperature of the starch. The claim as formerly submitted and as now submitted also specifies that the starch is dissolved by the caustic which Higgins does not show.

Regarding the criticism of claim 10, when it was explained to the Examiner that the claim was broad enough to include a treated cassava as well as an untreated cassava, we understood that the only objections then remaining were the inclusion of the unnecessary phrase "or its equivalent" and the description of the process by means of the result. The claim has therefore been amended to omit the phrase "or its equivalent" and to limit the continuance of the process "until" a certain point has been [fol. 1147] reached recognizable by certain characteristics. We understood this would meet the Examiner's objections.

Claim 15 was carefully taken up and discussed by the Examiner and his assistant and certain prior art, particularly patent No. 736,084, to Fuller, [who]* thoroughly discussed in connection therewith. The Examiner indicated that if the claim were amended to distinguish from the process in which the digesting agent converted the batch into dextrin, by including in the claim "without converting the batch into dextrin" he felt it would be allowable. The claim has also been amended to make it complete by specifying that the dissolving is carried to a point where the resulting product evidences a particular consistency.

Claim 19 has been similarly amended and should be allowed for substantially the same reasons.

Claim 16 is specific to the first step of the process, and is therefore complete as a sub-combination.

Claims 24, 38 and 41 have been cancelled. The Examiner objected to these claims merely on technical grounds and not on the ground that the subject matter thereof (as we intended it) was anticipated. We believe that the subject matter thereof is substantially covered by other claims and hence these have been dropped.

[*Words and figures enclosed in brackets erased in copy.]

The examiner in his action has raised the question as to whether claims 25, 36 and 37 are not too broad because of the expression "solvent of cellulose." At the interview with the Examiner we pointed out that the phrase "solvent of cellulose" was used in the original specification and claims. Applicant of course used the term "solvent of cellulose" as illustrated by caustic alkali, in a sense to include that form solvent action such as occurs when a metal [fol. 1148] is dissolved by an acid, in which combination or change of the dissolved body occurs. The Examiner at once appreciated this and also the double function of the solvent, both upon the starch and upon the wood, and it was pointed out to the Examiner that there were a number of such solvents well known to the Examiner besides caustic soda and potash which would be expected to be applicable to applicant's process. Upon the apparent recognition by the Examiner that the phrase in question was a proper one and his suggestion that claims 38 and 39 be consolidated, we substituted the term "solvent of cellulose" for "caustic alkali" in present claim 37 (former claim 39) and cancelled claim 38.

Referring to the last paragraph of the Examiner's action of November 11th, 1911, with respect to former claims 24 to 39, of which 24 and 38 are now cancelled, we understood that the only criticism as to these claims (except to the phrase "or its equivalent," which has been cancelled from all claims) was that the distinguishing features of the claims must be such that the product itself would carry its own marks of identification, and must not be distinguished by steps of the process. At the interview with the Examiner each of these claims was carefully considered and discussed and it was shown that none of them was distinguished by steps of the process except claim 31 (former claim 32). This claim has been entirely amended to overcome this criticism. In this claim as now amended the terms "viscous," "semi-fluid" and "unjellified" are characteristics clearly determinable from the product. The amount of water and the amylaceous base may be shown to be present by analysis. The phrase "dissolved by caus- [fol. 1149] tic," etc. occurring in other claims are distinguishing features which may be determined from the

product itself. If dissolved it must be by something. Analysis would also show the character of the carbohydrate base and indicate what solvent it was dissolved by. If dissolved by acid analysis should show the presence of the acid, its neutralization products or its effects.

The Examiner stated that it would be desirable for us to briefly indicate here some tests which might be used to establish the character of the product as described in these claims. For instance with respect to present claim 24 analysis would show that the base was a carbohydrate. Mixture with water as directed would show that it had the characteristic of producing a semi-fluid mass, and tensile and cleavage tests would establish that this mass had substantially the adhesive properties of animal glue.

Regarding claim 25, examination under the microscope would clearly show the presence of amylaceous grains and an attempt to dissolve them in water would show their substantial insolubility. A determination of the so-called amylo-cellulose such as separation by malt diastase would show the presence of so-called amylo-cellulose which is universally admitted to form the outer coating of the grain, and simple tests, as for instance by bursting with heat under the microscope or by observing the relative opacity of mixtures with hot water would indicate the extent to which the amylo-cellulose coating had been converted.

Regarding claim 26, well known methods of organic analysis would show the presence of starchy carbohydrate and the entire claim is a detailed description of a test by which a product may be distinguishable.

[fol. 1150] Regarding claim 27, amylaceous grains may be determined as above, and cassava may be determined by the characteristic odor or by the form of the grain or by other peculiarities. The fact that the grain has been treated will be indicated as stated above in connection with claim 25 or by other tests, and analysis as indicated above for amylo-cellulose would show its presence in greater proportion than in natural cassava.

Regarding claim 28, it may be briefly said that its semi-fluid character will be obvious. That it can only have been rendered so by digestion is clear and that it has the properties of animal glue is determinable by direct comparison of these properties, such as adhesiveness, tensile strength, etc.

Regarding claim 29, we discussed most of the characteristics above. The action of the alkaline digesting agent has been found to differ from that of acid by the character of degeneration products produced which remain in the material and which may be taken to indicate that the agent is alkaline, and the amount of water is determinable by analysis.

Regarding claim 30, the presence of starchy carbohydrate, the amount of water and the alkali metal hydroxide may be determined by ordinary analysis.

Regarding claim 31, this has been commented upon above. (Page 9 of this amendment).

Regarding claim 32, the presence and insolubility of the starchy carbohydrate may be indicated by separating the same, as by precipitation, and testing its solubility in water, and the presence of caustic in excess may be determined by titration.

Regardnig claim 33, the same comments apply with the added remark that the presence of soda and its propor- [fol. 1151] tionate amount are also matters of simple analysis.

Regarding claim 34, we believe this is practically covered by the remarks above given.

Regarding claims 35 and 26, these resent the new phrase "a solvent of cellulose." By separating the starchy carbohydrate, the solvent of cellulose remains for examination, and it is believed that in the case of every such solvent no difficulty will be met in determining not only its individuality but the amount of it which has been present. The particular analytical method used would be indicated by quantitative tests which indicate the particular solvent of cellulose present.

Regarding claim 37, the above remarks apply, and we have the added characterizations of certain physical tests well known to the trade.

It is not intended by the above statements to say that all of these tests would be applicable to every case, but we believe it will now be apparent to the Examiner that some of them or others equally well known would serve to clearly establish the infringement of the product.

We believe we have thoroughly covered every point raised by the Examiner and amended the claims so that

every requirement of the Examiner as outlined in his action and by him in the interview has been fully met.

The Examiner has insisted that the phrase "or is equivalent" be eliminated as unnecessary, stating that applicant is entitled to equivalents. This phrase has therefore been cancelled from the claims with the understanding that applicant is entitled to cover by such claims equivalents of the elements which the phrase modified.

In view of the above a reconsideration and favorable action is earnestly solicited.

Respectfully, Kenyon & Kenyon, Attorneys for Applicant.

[fol. 1152] 2-181

Address only The Commissioner of Patents, Washington, D. C.

Serial No. 460,737

RP. Department of the Interior,
United States Patent Office,
Washington, D. C., Dec. 22, 1911.

F. G. Perkins et al., % Kenyon & Kenyon, New York, N. Y.

SIR: Your application for a patent for an improvement in Glue and Method of making the same, filed Nov. 2, 1908, has been examined and allowed.

The final fee, twenty dollars, must be paid not later than six months from the date of this present notice of allowance. If the final fee be not paid within that period, the patent on this application will be withheld, unless renewed with an additional fee of $15, under the provisions of Section 4897, Revised Statutes.

The office delivers patents upon the day of their date, and on which their term begins to run. The printing, photolithographing, and engrossing of the several patent parts, preparatory to final signing and sealing, will require about four weeks, and such work will not be undertaken until after payment of the necessary fee.

When you send the final fee you will also send distinctly and plainly written, the name of the inventor and title of invention as above given, date of allowance (which is the date of this circular), date of filing, and, if assigned, the names of the assignees.

On left margin: ☞ In remitting the final fee give the serial number at the head of this notice.

On right margin: ☞ Uncertified checks will not be accepted.

[fol. 1153] If you desire to have the patent issue to assignees, an assignment containing a request to that effect, together with the fee for recording the same, must be filed in this office on or before the date of payment of final fee.

After issue of the patent uncertified copies of the drawings and specifications may be purchased at the price of five cents each. The money should accompany the order. Postage stamps will not be received.

Final fees will not be received from other than the applicant, his assignee or attorney, or a party in interest as shown by the records of the Patent Office.

Respectfully, E. B. Moore, Commissioner of Patents.

6-1641.

[fol. 1154]

2-073

U. S. Patent Office, Feb. 9, 1912.

Serial No. 460,737

Division 31, Paper No. 22

I (Rule 78)

Department of the Interior,
United States Patent Office,
Washington, D. C., Feb. 7, 1912.

Petition

Application of Frank G. Perkins. Serial No. 460,737. Invention: Glue and methods of Making Same

This petition is referred to the Examiner in charge of Division 31 for recommendation.

In case he recommends adverse ly he will state his reasons therefor.

E. B. Moore, Commissioner of Patents.

[fol. 1155] Application Room, Feb. 5, 1912, U. S. Patent Office

Docket Clerk, Feb. 7, 1912, U. S. Patent Office

In the United States Patent Office

In re Application of F. G. Perkins. Ser. No. 460,737. Filed Nov. 2, 1908. For Improvements in Glue and Method of Making the Same. Allowed Dec. 22, 1911

#49 Wall St.,
New York City, February 5, 1912.

Hon. Commissioner of Patents, Washington, D. C.

Sir: It is requested that the above entitled application be amended as follows without withdrawing the case from issue:

Page 8, line 11, change "different" to "definite."
Page 10, line 3, cancel "that."
Page 10, line 20, after "but" insert "a product."
Same line, after "showing" cancel "a product."
Claim 37, line 1, after "base" insert "and a."

Remarks

The above changes merely correct certain formal errors in wording which by inadvertence were not corrected by the last amendment.

Respectfully submitted.

Kenyon & Kenyon, Attorneys for applicant.

Recommended for entry under Rule 78. Final fee not paid.

Feb. 8, 1912.

G. S. Ely, Exr., Div. 31.

Approved: Feb. 8, 1912. F. A. Tennant, Assistant Commissioner.

[fol. 1156]

2-327

$20 Received Feb. 20, 1912

Chief Clerk U. S. Patent Office

G

Memorandum

of

Fee Paid at United States Patent Office

(Be careful to give correct Serial No.)

Serial No 460,737 , 191

Inventor: F. G. Perkins

Patent to be Issued to

Name of Invention, as Allowed: Improvements in Glue and Method of Making the Same

Date of Payment:

Fee—$20.00

Date of Filing: Nov. 2, 1908

Date of Circular of Allowance: Dec. 22, 1911.

The Commissioner of Patents will please apply the accompanying fee as indicated above.

Kenyon & Kenyon, Attorneys.

Sent Patent to

Messrs. Kenyon & Kenyon

49 Wall Street

New York, N. Y.

C-1846.

[fols. 1157 & 1158] Nf 2/12/12

P 22-218

23-15

87 Oils, Fats, and Glue Adhesives.

1908

460737

Brief

Contents:

Print

Application papers.

1. Rejection ..... Dec. 12, 1908.
2. Amendment A ..... Nov. 30, 1909.
3. Rejection ..... Dec. 16, 1909.
4. Amendment B- ..... Aug. 15, 1910.

5.	Letter	Sep.	20, 1910.
6.	Power of Attorney by Extr	Sept.	24/10
7.	Admt. A		
	Dec. 14, 1910 Amend't transferred to companion case 460738		
8.	Letter	Jan.	6, 1911.
9.	Letter	Jan.	12, 1911.
10.	Letter	Jan.	17, 1911.
11.	Amend. C and Affidavit	April	6, 1911.
12.	Rej	Apl.	29, 1911.
13.	Amendt. D and affdvt-	July	10, 1911.
14.	Letter—	July	25, 1911.
15.	Amendt. E-	Aug.	3, 1911.
16.	Letter	Aug.	31, 1911.
17.	Amendt. F	Sept.	6, 1911.
18.	Rej.	Sept.	22, 1911.
19.	Amendt. G-	Oct.	24, 1911.
20.	Rej	Nov.	11, 1911.
21.	Amendt. H	Nov.	24, 1911.
22.	" I (Rule 17)-	Feby.	5, 1912.
23.			

Title:

Improvement in Glue and
Method of Making the Same.

38 Claims

(87-17)

38 47 13 10 41

39 24 53 Claims

(Here follows specification No. 1,020,655, marked side folio pages 1159, 1160, 1161, 1162, 1163, 1164, and 1165.)

[fols. 1166 & 1167] STIPULATION RE TRANSCRIPT

It is hereby stipulated by and between counsel for the respective parties that the foregoing constitutes a correct and true copy of the proceedings, papers and exhibits as provided for in the hereinbefore præcipe-stipulation and constituting the transcript on appeal in said cause as made up pursuant to said præcipe-stipulation.

Gorham Crosby, Counsel for Plaintiff. James A. Watson, Counsel for Defendants.

Clerk's certificate to foregoing, omitted in printing.

UNITED STATES PATENT OFFICE.

FRANK G. PERKINS, OF SOUTH BEND, INDIANA; GERTRUDE S. PERKINS, EXECUTRIX OF SAID FRANK G. PERKINS, DECEASED, ASSIGNOR TO PERKINS GLUE COMPANY, A CORPORATION OF PENNSYLVANIA.

GLUE AND METHOD OF MAKING THE SAME.

Specification of Letters Patent. Patented Mar. 19, 1912.

1,020,655. Application filed November 2, 1908. Serial No. 460,737.

No Drawing.

To all whom it may concern:

Be it known that I, FRANK G. PERKINS, a citizen of the United States, and a resident of South Bend, county of St. Joseph, and State of Indiana, have invented certain new and useful Improvements in Glue and Methods of Making the Same, of which the following is a specification.

My invention relates to improvements in glue and the method of making the same, and more particularly to the manufacture of glue from carbohydrates containing amylo-cellulose or its equivalent.

In the well known method of making a "starch paste" the solid is mixed with water enough, to make, after tumefying, a paste of such viscosity or density that it can be easily applied. This mixture is then subjected to heat to rupture or burst the cellulose walls and this cooking to a considerable degree supposedly reduces the cellulose to soluble starch, particularly in the presence of soluble starch already in solution. To increase the body or viscosity small amounts of ammonia have been added prior to or after heating. Such pastes have not the necessary relative "tack," viscosity, cohesiveness and tenacity to spread and adhere properly when applied as wood glues. Such pastes in cooling also become extremely thick and jelly-like and are practically unsatisfactory for woodwork when originally made with water, or diluted after cooking, because water warps the wood and delays drying and the pastes do not set hard enough and are not dense and elastic enough when dry. If more water is added in an attempt to make it more fluid, the paste becomes so weak and diluted that it has practically no power and would be wholly unfit for most classes of work, especially wood joints.

Various objects of my invention are to provide a glue and a method of making the same from carbohydrates, which will not have the disadvantages just pointed out, but which will be exceptionally tenacious and powerful but still amply fluid for easy application, and which can be economically and easily produced.

A further object of my invention is to produce a glue which will have the great practical advantage that it may be practically used for the same purposes as the best animal glue, and possess certain great advantages of permanency to weather and temperature variations far superior to those of animal glue. As far as I am aware, such conditions have never been met by any prior adhesive made from a carbohydrate base.

A further important object of my invention is to produce an adhesive or glue base which may be stored or sold in a dry state and which may then be prepared for use by mixing up with or without the use of heat. Such improvements are of great practical and industrial advantage and importance and have been much sought. To do this I first take a carbohydrate of the proper kind, and treat it with a reagent to decrease its water absorptive properties in the sense that to render fluid the finished glue, comparatively little water will have to be added and the final glue will not thereby become seriously diluted. The reagent I use I call a starch converting agent because it is believed it exercises, at least in part, a hydrolyzing or oxidizing or converting action similar to that of the well known starch converting agents many of which have been used to convert starch into soluble starch and dextrin. I may use any suitable starch converting agent but the action I produce is preferably much less complete since it is not my object to convert the starch wholly but only to effect its physical properties when put into solution or dissolved to form glue. The effect of this treatment is also that it decreases the viscosity of the glue produced with a given amount of water without detriment to its "tack," quick adhesive properties and cohesion. As a base I prefer to use the starch secreted by the cassava plant, which has peculiar properties and advantages for this purpose. After being treated as above, the dried material may be mixed with a small amount of water and with a solvent of amylo-cellulose, such as caustic alkali, and a glue produced the strength of which when dry is superior to the lateral strength of wood fiber. The prepared glue is very stable in its physi-

cal condition, so much so, that it may be kept for days or even weeks after it has been mixed for application without fermentative change. By my process in its preferred form the glue is free from the complications which attend the use of an adhesive which must be cooked or warmed before use, or kept warm during use, and is more powerful than that which results from the treatment of starch in other ways. My improved glue when made in its best form and properly applied will not only tear away the wood at some point in the wood joint produced by the use of this glue, but will tear away the wood at many points whether with or against the grain.

Further objects, advantages and features will more clearly appear from the detailed description given below.

In carrying out one embodiment of my invention I take the cassava carbohydrate or flour in dry form and add at least an equal weight of water. The batch is then agitated and heated to about 130° F., which is below the bursting temperature of the starch. Then I slowly add from 2% to 3% by weight (of the raw carbohydrate) of strong sulfuric acid. This may be considerably diluted if desired before it is added. The same is kept in continual agitation. The agitation preferably produced by thorough stirring is continued for from four to six hours after the acid has been added and then the acid may be neutralized by the addition of a small amount of caustic soda or similar alkali. The acid acts upon the starch or carbohydrate to decrease its water absorptive properties. As the acid appears to remain unchanged in the batch, until neutralized. I believe it acts catalytically to change the molecular condition of the carbohydrate without rendering it substantially soluble in the water. However, great care must be exercised not to have the heat sufficient or the acid in such quantity as to put the starch or carbohydrate in solution. If the action of the acid and heat is carried too far the starch will be changed into dextrin, and will go into solution, and as such it would be lost to my process, as I utilize only the suspended material. Even this would cease to have the desired properties if the action were carried too far.

That a large part, if not all, of the starch does not, in my improved process, go into solution, is shown by its settling upon stopping the agitation and by the weight and analysis of the product yielded. The batch therefore has not been converted into dextrin. Sulfuric and other acids as well as other starch converting agents are stated to have a catalytic action affecting the molecular state of amylose or its state of hydration. This I believe to be promoted and equalized by prolonged agitation both together with the action of heat, removing constituents or destroying states of aggregation or polymerization, which are detrimental to the use of the carbohydrate as a glue base. The amount of alkali used is only enough to neutralize the acid. After this has been added, the batch is then cooled, drained and dried and kept in dry form until ready for use.

I find that the carbohydrate secreted by the cassava plant and known as cassava flour has many advantages over other starches and starchy products and prefer its use, but such other starches or starchy products may be used with more or less success. Other starchy products from the cassava plant are found to be more or less adaptable and even other starchy products may be used with some little success but they do not produce glues so tenacious and are otherwise more or less undesirable. Some are affected by impurities.

The above forms the first part of my improved process and the various steps therein may all be carried out at the factory.

In commercial use I preferably ship the dry material, obtained as above, to the consumer who carries out the second part of the process at the place where the glue is to be used, but if desired the first and second parts of my improved process may be carried out together.

In carrying out the remaining steps in the preparation of my improved glue, the dried base, obtained as above, is mixed with about three parts or less by weight, (of dried base) of water according to the strength of the joint and economy desired. The dried base does not materially go into solution in the water unless heat is applied, but a liquid suspension is thereby formed which is agitated and treated with a solvent of cellulose, as, for example, an aqueous solution of caustic soda or potash alkaline to phenolthalien, using if cold from six to ten per cent. of the weight of the dry base, of caustic soda or its equivalent of caustic potash. The alkali, I believe, acts chemically to unite with one or more starch molecules and with the water to form a colloidal compound. The alkali is best added in the form of a solution of from 33% to 50% strength. Sodium and potassium hydrates are the most available and among the most powerful of the known solvents of the starch cellulose and are well adapted for most purposes.

To take a specific example, a given quantity, say 200 lbs. of the dried amylaceous base was mixed with from 100 to 300 lbs. of water (preferably 225 lbs. or less). After the mixture was thoroughly agitated, 20 lbs. of caustic soda was added in a concentrated solution of approximately one part alkali in one to two parts water. This was added with extreme slowness, requiring 15 to 20

minutes for the 50 lbs. solution required. During this time constant stirring was maintained in order to equalize and distribute the action of the caustic soda as fully as possible. When normal temperatures were used the result has not been obtained with less than 6 parts of NaOH per 100 parts of amylaceous base. The result consists in what is called the passing over or "coming across" of the mixture and may be described as follows: During the earlier stages of the addition of the caustic in the above example, little difference in the appearance of the mass was apparent. Soon, however, it became creamy and then more pasty and difficult to stir. When about half the caustic soda had been added, there was faintly observable a minute mottled effect on the surface of the mass being stirred, and it gradually assumed a translucent porcelain-like appearance. If at this time a little of the mixture was squeezed between glass plates portions of the mixture were observed to be transparent and almost invisible. Other portions presented much the appearance of the original mixture of water and suspended particles of starch. As the addition of caustic soda proceeded accumulations of clearer matter occurred on the sides of the vessel and on parts of the stirrers and finally when the proper amount of caustic had been added, the entire mass "passed over" or "came across", being converted from a mixture of suspended starch and water containing caustic to a homogeneous colloidal compound of starch caustic and water. A little excess of caustic was preferably added to prevent decomposition of the compounds by the carbonic acid or moisture of the air. As much as fourteen per cent. NaOH, or the equivalent of other caustic may be used, leaving some free caustic in the prepared glue. The word "compound" is here used in the more modern chemical sense of matter connected within the limits of some quantitative relation to produce a definitely recognizable product having certain definite physical characteristics. It is found that temperature affects the amount of caustic required to produce this result and it is believed that as temperature affects the polymerizing or uniting power of the starch molecules, one with another, so it affects the ability of a smaller quantity of caustic to satisfy or bring across a given quantity of starch. It is found that at successively increasing temperatures one is enabled to bring across the mixture with successively decreasing proportions of caustic.

As previously stated, when ordinary starch is heated with water, it absorbs enormous quantities of water, and if only two or three parts of water are used becomes of a stiff jelly-like form which must be very much diluted before it will be practically workable. I find, however, that using my improved glue base and method of mixing the same, this water absorbing power can be greatly reduced and can be regulated, although the mixing is done with the same proportions of alkali and carbohydrate or else the same temperature, which have hitherto produced unworkable jellies or weakly adhesive pastes or mucilages. And by the use of cassava starch in particular, results can be secured entirely different from those hitherto produced, as stated by others, preferably with corn. Thus, by proper adjustment of conditions of mixing I am able to produce this glue even with certain grades of untreated cassava carbohydrate and with other starches and conversion products (starchy carbohydrates). The preliminary treatment, however, substantially reduces the absorption of water by the starch and prevents it from becoming jelly-like and tough when afterward treated either with the water as above indicated or with the alkali, or both.

In the second part of my improved process, less than about three parts of water by weight to one part of the dry material are used and after adding the solvent it is found that even with such a small amount of water, the batch will assume a semi-fluid consistency much superior to that ordinarily obtained by the use of water alone and will not become jelly-like and tough as in former processes. The alkali added acts, I believe, to dissolve more or less of the cellulose and carbohydrate, uniting with the same and with the water and forming a glue of very tenacious properties. The dry carbohydrate is mixed with the water with a carefully regulated heat, if any. The action of heat replaces the action of a portion of the caustic in transforming the glue base, as explained above. By the preliminary treatment in reducing the water absorbing power of the carbohydrate, a very concentrated mixture with water may be obtained.

Experiments indicate that after the carbohydrate base has been treated in accordance with the first step of my process, the proportion of amylo-cellulose in the carbohydrate granule has been increased. I believe this increase in the percentage or proportion of the amylo-cellulose in the carbohydrate allows of the same to be changed into a good glue with very much less water than would otherwise be required. One way which has been found quite satisfactory for determining when the action of the acid or its equivalent, and the agitation, have been carried far enough in the first step, is as follows:

When the carbohydrate glue base which has been dried has been boiled for ten minutes with dry live steam at 100 lbs. pressure with 9 parts of water and tested for vis-

cosity while hot, it showed a viscosity between that of cold water and three times that of cold water.

In specific examples tried, the carbohydrate base, subjected to the above test, has shown viscosities between that of cold water and three times that of cold water, but a product showing about two times the viscosity of water is preferred.

The carbohydrate glue base in the preferred form retains substantially unchanged the size and general form of particle as viewed under the microscope when treated with cold water, and produces opalescent cloudy solutions with water at 200° F.

When treated in accordance with my process, I find that the carbohydrate glue base may be formed into glue by using only from one to three parts of water, the more water used the greater the delay in drying. Preferably less than 4½ parts of water should be used in making the glue from the carbohydrate base.

I believe that the cause of the tenacious properties when carbohydrates are treated with water and a strong solution of an alkali may be traced to the proper proportioning of viscosity, cohesion and adhesion, together with the peculiar chemical action which caustic loosely combined or free in the glue as applied, exerts on the cellulose which it in turn combines with, in making the joint to form alkali metal carbonate, bicarbonate and acetate. I believe this proper proportioning is due to the partial change of the integument and the proper proportioning of the amylo-cellulose and the granulose (or the proper mean polymerization) when united with the caustic and water. Consequently, I believe that to obtain the best results it is necessary to abstain from reducing the cellulose to true soluble starch, and that sufficient cellulose must be left to make the glue amply tenacious. Therefore, the action of the acid and alkali should not be carried so far nor the temperature be so high as to destroy all the cellulose and impair its strength by changing it into soluble starch and the starch into sugar or dextrin. Also, in actual practice I have found that a good glue is produced by treating the base with the chemicals to reduce the water absorbing power to a point where the base if mixed with from 2 to 3 parts of water and subjected to heat of 170° F. would result in a syrupy condition instead of a thick jelly-like mass. I find that by such suitable treatment under my process it is possible to produce from the base long filaments having a strength similar to threads of animal glue. Practically all the water must be later removed that goes into the glue solution and is applied to the joints, hence an increase of water in the glue solution involves changes in drying methods, or in drying time, or in risks of injury to the material due to warping by the extra water, all of very serious consequence. The diluted or adulterated pastes hitherto made from the natural carbohydrates in the manner explained before are unfit for many classes of work and especially wood joint work, since they contain so much water or adulterants that it takes the joints very long to dry or when they do become dry there is so little binding material left that only a very weak bond is obtained. Thus it is of the greatest importance and value to produce a concentrated glue solution ready for application, which parallels the animal glue solutions now employed industrially, in respect to water contents and physical properties in application, and is equal or superior as to strength and permanency.

Certain advantages of my improved process may be obtained to some extent even although other materials be mixed with the amylaceous material to form the glue base.

In the preferred form described my improved glue is transparent and free from odor, and is very stable after mixing for use, it is instantly adhesive to clean surfaces, its cohesion is very great but not sufficient to overcome its adhesion and its viscosity is lasting and low enough to permit ready application, but so proportioned to its cohesion that it is capable of being applied by machinery like hide glue, but still very long tough fibers are produced if freshly joined surfaces are separated. I have found that, owing to the breakage of these filaments quick separation of such surfaces produces a crackle like electric sparks.

My glue will produce joints which are practically unaffected by natural humidity and which are unaffected by prolonged dry heat. In the preferred form it forms a joint with wood or other cellulosic material, which joint is distinguished from ordinary mucilages, sizes and pastes by the fact that it consists of the following layers in the order named, unaltered cellulosic material, cellulosic material altered by caustic, tough amylaceous material altered by caustic, cellulosic material altered by caustic and unaltered cellulose. This joint can probably be distinguished wherever found, by the shading of the above layers into one another when stained with iodin and examined under the microscope and by other tests. Glued up panels have been placed behind a radiator for 18 months without cracking or separating of the glue joint. These features make my glue especially advantageous for purposes in which other vegetable glues are practically useless.

Although I have described my improvements in great detail and with much particularity and have mentioned particular compounds which I prefer to use, I desire

it to be understood that I do not limit myself to such details and compounds, except as clearly specified in the appended claims, as many modifications and substitutes may be found; but,

Having fully and clearly described my invention with respect to one particular embodiment thereof, what I claim and desire to secure by Letters Patent, is:

1. The process of making a glue base which consists in agitating cassava carbohydrate with water and a starch converting agent whereby the polymerization of the carbohydrate is altered to a point such that when dissolved it will form a viscous semi-fluid unjellified product adapted to be applied by machinery.

2. The process of making wood glue which consists in taking suitable carbohydrate material and properly proportioning the viscosity, cohesiveness and adhesiveness of the carbohydrate material resulting when it is dissolved to form glue applicable by machinery and then dissolving the carbohydrate material with a solvent of cellulose to put it into solution to form glue.

3. The process of making a glue base which consists in agitating a starchy carbohydrate with water and a starch converting agent to decrease the water absorptive properties of the carbohydrate to properly proportion the viscosity, adhesiveness and cohesiveness resulting when the base is dissolved to form glue properly for the application of the glue by machinery.

4. The process of making a glue base which consists in agitating a starchy carbohydrate with water and suitable chemicals below the bursting temperature of the starch to proportion the viscosity, adhesiveness and cohesiveness resulting when the base is dissolved to form glue applicable by machinery.

5. In the making of adhesives, treating cassava flour with substantially an equal weight of water, heating the same to about 130° F. and adding about 2% or 3% by weight of strong acid slowly and with agitation, without rendering the flour materially soluble in water, then neutralizing the acid with an alkali after from 4 to 6 hours agitation.

6. In the making of a glue base, treating amylaceous material with a reagent to decrease its water absorptive properties, leaving a material portion of amylaceous material in the product insoluble in water.

7. In the making of adhesives, treating a suitable carbohydrate with water and a digesting agent without rendering the carbohydrate materially soluble in water, to decrease the water absorptive properties of the carbohydrate.

8. A glue base characterized by the facts that it is prepared from starchy material, retains substantially unchanged the size and general form of particle when treated with cold water, and produces opalescent cloudy solutions with water at 200° F.

9. The process of making glue which consists in treating starch below the bursting temperature of the starch, with a digesting agent such as caustic and water until the material assumes a viscous semi-fluid consistency adapted to be applied by machinery.

10. The process of making glue which consists in dissolving cassava carbohydrate in caustic alkali until a glue is formed as distinguished from mucilages, sizes and pastes.

11. The process of making a glue, which consists in treating a starchy carbohydrate with caustic alkali, and water, to dissolve the carbohydrate, the total amount of water used being about 3 parts or less by weight of the carbohydrate, the amount of caustic alkali used, calculated as NaOH being about 10% or less by weight of the carbohydrate so that a wood glue is formed, as distinguished from mucilages, sizes and paste.

12. The process of making a glue, which consists in mixing starch with water and caustic alkali to dissolve the carbohydrate, the amount of water used being about 3 parts or less by weight of dry carbohydrate so that a wood glue is formed, as distinguished from mucilages, sizes and paste.

13. The process of making a wood glue which consists in treating a suitable starchy product a material portion of which is substantially insoluble in water with a solvent of cellulose and about 3 parts or less by weight of water, to produce a glue having adhesive powers substantially as great as those of good animal glue.

14. In the making of glue, treating a suitable starchy product with about three parts or less by weight of water and adding a solution of caustic soda or other equivalent alkali using about 10% or less by weight of the caustic soda or its equivalent of other alkali to dissolve the product.

15. In the process of making wood glue, the combination of the following steps, agitating a starchy carbohydrate with a digesting agent to decrease its water absorptive properties without converting the batch into dextrin, and then substantially dissolving the product thus produced with about three parts or less of water until the resulting product has a consistency such that it is applicable to glue up veneers.

16. In the process of making wood glue, agitating a starchy carbohydrate with a digesting agent until a sample of the material taken from the batch and dissolved will show a viscosity, adhesiveness and cohesiveness substantially equal to animal glue.

17. The process of making wood glue which consists in agitating starch with a digesting agent to decrease its water absorp-

tive properties without rendering the carbohydrate materially soluble in cold water and then combining the product thus produced with a solvent of cellulose to produce a glue for application, thus proportioning the viscosity, adhesiveness and cohesiveness of the final glue.

18. The process of making wood glue which consists in agitating a starchy carbohydrate with a digesting agent to decrease its water absorptive properties and then combining the product thus produced with alkali and water to produce a glue for application having free caustic alkali therein.

19. In the process of making wood glue, the combination of the following steps, agitating a cassava carbohydrate with a digesting agent to decrease its water absorptive properties without rendering the carbohydrate materially soluble in cold water and then putting the product thus produced into a solution containing about three parts or less by weight of water to produce a glue for application.

20. The process of making glue, which consists in agitating a starchy carbohydrate with water and a digesting agent to reduce the water absorptive properties of the carbohydrate without rendering it materially soluble in water, then mixing the carbohydrate with water and caustic alkali, the amount of water used being about three parts or less by weight of dry carbohydrate, the amount of caustic used being about 10% or less by weight of dry carbohydrate, to dissolve the carbohydrate to form the glue as distinguished from mucilages, sizes and paste.

21. The improved glue process which consists in treating cassava carbohydrate with substantially an equal weight of water, heating the same to about 130° F., adding from 2% to 3% by weight of an acid, slowly, and during agitation, neutralizing the batch with an alkali after from 4 to 6 hours agitation, then cooling and drying the batch, then adding from 1 to 3 parts by weight of water, and then while being agitated treating the same with a solution of a caustic alkali using about 10% or less by weight of the dry alkali and applying the resulting product to surfaces with which the caustic is adapted to combine and forming a joint between said surfaces.

22. In the making of adhesives, treating a suitable starchy carbohydrate insoluble in water with water with a reagent to decrease its water absorptive properties but without rendering the carbohydrate materially soluble in water, then allowing the batch to dry, then treating the same with water and a solvent of cellulose such as caustic alkali to form glue.

23. In the making of adhesives, treating a suitable starchy carbohydrate with an agent having an acid reaction without rendering the carbohydrate materially soluble in water, to decrease the water absorptive properties of the carbohydrate and then treating the carbohydrate with a solvent of cellulose, thus proportioning the viscosity, adhesiveness and cohesiveness of the final glue.

24. A carbohydrate base for making glue composed of suitable carbohydrate which when mixed with about 3 parts or less by weight of water and a solvent of cellulose will form a semi fluid mass having substantially the adhesive properties of animal glue.

25. A base for making glue as distinguished from mucilages, sizes and pastes embracing treated amylaceous grains substantially insoluble in water and the outer so-called amylo-cellulose coating of which insoluble grains has been partially but not entirely converted.

26. A base for making glue composed of starchy carbohydrate or its equivalent which when boiled for 10 minutes with dry live steam at 100 pounds pressure with nine parts of water and tested for viscosity while hot will show a viscosity between that of cold water and three times that of cold water.

27. A base for glue as distinguished from mucilages, pastes and sizes, comprising treated cassava amylaceous grains in which the proportion of so-called cellulose is greater than in the natural material from which the base is derived.

28. A glue comprising cassava carbohydrate rendered semi-fluid by digestion and having substantially the properties of animal glue.

29. A glue comprising chiefly starch dissolved by a digesting agent alkaline to phenolphthalien and in about 3 parts or less by weight of water.

30. A wood and fiber glue formed of starchy carbohydrate or its equivalent in union therewith of about 3 parts or less by weight of water and alkali metal hydroxid.

31. A wood and fiber glue containing amylaceous material as a base dissolved without acid in about three parts of water or less, and being viscous, semi-fluid and unjellified.

32. A glue as distinguished from mucilages, sizes and pastes containing a starch carbohydrate base substantially insoluble in water and dissolved by caustic and containing free caustic.

33. A glue consisting of a vegetable carbohydrate base substantially insoluble in water and dissolved by water and caustic soda alkali, the amount of water being about three parts or less by weight of dry carbohydrate and the amount of caustic present being about 10% or less by weight of the dry carbohydrate.

34. A glue consisting of a vegetable carbohydrate base substantially insoluble in water and dissolved by caustic alkali, the amount of water being about three parts or less by weight of dry carbohydrate.

35. A glue containing a starchy carbohydrate base dissolved by a solvent of cellulose and water, the amount of water in the glue being about three parts or less by weight of dry carbohydrate.

36. A glue as distinguished from mucilages, sizes and pastes, consisting chiefly of a starchy carbohydrate base substantially insoluble in water and dissolved by a solvent of cellulose.

37. A glue composed of a starchy carbohydrate base and a solvent of cellulose and having such a character that it will be substantially unaffected by the natural humidity and having substantially as good adhering qualities as the best animal glue.

38. The process of making a wood glue which consists in suspending a glue base containing amylaceous matter insoluble in water in about three parts or less by weight of water and treating the base with an alkali properly proportioned substantially as described to produce a glue having a lasting viscosity to flow through pipes and the adhesiveness of animal glue.

In testimony whereof, I have signed my name to this specification, in the presence of two subscribing witnesses.

FRANK G. PERKINS.

Witnesses:
GORHAM CROSBY,
EDWIN SEGER

[fol. 1168] SUPREME COURT OF THE UNITED STATES

ORDER ALLOWING CERTIORARI—Filed October 17, 1927

The petition herein for a writ of certiorari to the United States Circuit Court of Appeals for the Sixth Circuit is granted. And it is further ordered that the duly certified copy of the tanscript of the proceedings below which accompanied the petition shall be treated as though filed in response to such writ.

Endorsed on cover: File No. 32,737. U. S. Circuit Court of Appeals, Sixth Circuit. Term No. 285. Holland Furniture Company, petitioner, vs. Perkins Glue Company. Petition for writ of certiorari and exhibit thereto. Filed June 8th, 1927. File No. 32,737.

(9261)

MAR 5 1928

IN THE

Supreme Court of the United States

OCTOBER TERM, 1927.

No. 285.

HOLLAND FURNITURE COMPANY,
Petitioner,

vs.

PERKINS GLUE COMPANY,
Respondent.

BRIEF FOR RESPONDENT.

GORHAM CROSBY,
Counsel for Respondent.

S. MONTAGUE WARE, JR.,
of Counsel for Respondent.

March 2, 1928.

GAULD & ACKERMAN, INC., 143 LIBERTY STREET, NEW YORK CITY.

INDEX.

	PAGE
Brief Statement of the Case	1
Starch and the Meaning of Viscosity, Degeneration and Water Absorptiveness	10
The Requirements of a Glue for the Wood Panel or Furniture Veneer Industry	12
Perkins' Early Work at Poplar Bluff	14
Perkins' Failure at Cairo in 1905	18
Perkins' Failure at Wilts	18
Perkins' Failure at Frosts in 1906	18
Perkins' Failure at First at the Singer Company's Plant, 1906	19
The Specification of the Patent in Suit	20
The So-Called Tests for the Base	26
The Practical Tests for Veneer Glue	29
The Prior Art	30
The Gerson & Sachse and Virneisel Patents	30
Dornemann French Patent	34
Higgins U. S. Patent 579,827	37
Brueder German Patent	38
Gerard Belgian Patent and "Apparatine" Publications	40
Marsden U. S. Patent 376,445	44
The New Perkins Glue was not Obvious from the Prior Art	45
Perkins' Glue Has Revolutionized the Veneering Industry	47

PAGE

The Solva Co. Litigation ____ 48
Judge Sanborn's Decision at Final Hearing in the Solva Case ____ 50
Opinion of the Circuit Court of Appeals in the Solva Case with Comments ____ 55
The C. C. A. in the Solva Case did not Limit the Glue Product Claims to the So-called Tests for the Base ____ 76
The Solva Petition for Rehearing ____ 79
Judge Sanborn's Memorandum on Entry of Final Decree ____ 81

The Disclaimer as to Process Claims and The Glue Base Claims ____ 87
Judge Sessions' Decision in the West Michigan Co. and Hood & Wright Cases ____ 88
The Nature of the Infringement in the Case at Bar ____ 91
Defendant's Base is Degenerated ____ 92
Judge Sessions' Opinion for Interlocutory Decree in the Case at Bar ____ 97
Judge Cooper's Opinion in the Standard Furniture Co. Case ____ 101
Judge Geiger's Decision in the Wisconsin Cases ____ 105
Judge Geiger Misinterprets the Solva Decision ____ 106
Judge Geiger Misconstrues the Product Claims ____ 107
Judge Geiger Misapplies the Disclaimer ____ 108
Judge Geiger Misconstrues the Result in the Solva Case ____ 109
Judge Geiger had an Erroneous Idea Regarding Anticipation ____ 111

The Decision of the 2nd C. C. A. in the Standard Case is Likewise Erroneous ____ 114
The Decision of the 7th C. C. A. in the Wisconsin Cases is also Erroneous ____ 119
Judge Sessions' Reopening of the Case at Bar and Reversal of his Interlocutory Decree ____ 121

Argument.

PAGE

The Product Claims are Neither Anticipated nor Limited by the Prior Art and Defendant's Doings are not Justified by the Prior Art 122

Perkins' Change in Water Proportions was not a Mere Difference in Degree 128

A Prior Patent to Anticipate or Limit one of Later Date Must Do so Without Assistance From the Latter 130

Under the Law the Product Claims Should Not be Limited to the Process Described 132

The 7th C. C. A. in the Solva Case Did Not Limit the Product Claims to the Two-Step Process 136

If the Product Claims are Valid, Defendant Infringes .. 138

Plaintiff's Failure to Appeal from Judge Sanborn's Reasoning Has No Bearing 140

The Disclaimer as to Process Claims Does Not Limit or Affect the Product Claims 28, 30, 31 141

The Inconsistency of Defendant's Position 150

The Absurdity of Defendant's Argument with Respect to the So-called Tests for the Base 152

Defendant's Argument with Respect to the Disclaimer, etc. 164

Conclusion 172

TABLE OF CASES.

PAGES

American Co. vs. Mesta Co., 18 Fed. (2nd), 538 156
Asperin Case, 171 Fed., 887, 889 (affirmed 179 Fed., 701) 33, 131
Atlantic Co. vs. Hulings, 21 Fed., 519 165
Baker vs. Refractories, 253 Fed., 741 (3rd C. C. A.) 135
Bene vs. Jeantet, 129 U. S., 683; 32 L. Ed., 803 155
Bracewell vs. Passaic, 107 Fed., 469 165
Bresnahan vs. Tripp Co., 102 Fed., 899, 900; 43 C. C. A., 48 (1st C. C. A.) 7, 133
Carnegie vs. Cambria, 185 U. S, 403 145
Clarke vs. Deere & Mansur, 80 Fed., 534, 537; 25 C. C. A., 619 (7th C. C. A.) 141
Cochrane vs. Badische, 111 U. S., 293; 28 L. Ed., 433, 310 154
Cohn vs. U. S. Corset Co., 93 U. S., 366; 23 L. Ed., 907 130
Dunn vs. Toronto, 259 Fed., 258 (6th C. C. A.) 135
Dunbar vs. Meyers, 94 U. S., 187; 24 L. Ed., 34 165
Eagleton Co. vs. West Co., 111 U. S., 490, 28 L. Ed., 493 159
Eames vs. Andrews, 122 U. S., 44; 30 L. Ed., 1064 125
Eibel Process Co. vs. Paper Co., 261 U. S., 66, 67; 67 L. Ed., 534 129
Evans vs. Suess, 83 Fed., 706, 709; 28 C. C. A., 24 (7th C. C. A.) 9, 141
General Electric vs. Laco Co., 233 Fed., 96, 103, 105; 147 C. C. A., 166 (2nd C. C. A.) 127, 135
Giant Powder Co. vs. Powder Works, 98 U. S., 126; 25 L. Ed., 77 167
Graham vs. Earl, 92 Fed., 155, 158; 34 C. C. A., 267 (9th C. C. A.) 8, 147, 165
Hess Bright vs. Standard, 177 Fed., 437 126
Incandescent Lamp Case, 159 U. S., 683, 474; 40 L. Ed., 221, 224 155

PAGES

Johns Pratt Co. vs. Snow, 212 Fed., 173, 176 ..... 33, 130
Kuehmsted vs. Elberfeld Co., 179 Fed., 701; 103 C. C. A., 243 (7th C. C. A.) 127, 134
Los Angeles Co. vs. Aeolian Co., 143 Fed., 880, 885; 75 C. C. A., 88 (9th C. C. A.) 7, 133
Ludwigs vs. Payson Mfg. Co., 206 Fed., 60, 64; 124 C. C. A., 194 (7th C. C. A.) 33, 131
Mast Foos & Co. vs. Dempster Co., 82 Fed., 327, 333; 27 C. C. A., 191 (8th C. C. A.) 7, 132
Matheson vs. Campbell, 78 Fed., 910, 917 155
McCarty vs. Lehigh, 160 U. S., 110, 116; 40 L. Ed., 358, 361 ..... 9, 132
McMichael & Wildman vs. Ruth, 128 Fed., 706; 63 C. C. A., 304 (3rd C. C. A.) 126
Michigan vs. Consolidated Co., 67 Fed., 121 159
Minerals Separation Case, 250 U. S., 336; 63 L. Ed., 1019 155
National Co. vs. American Co., 53 Fed., 367, 370; 3 C. C. A., 359 (3rd C. C. A.) 7
Naylor vs. Alsop, 168 Fed., 911, 919; 94 C. C. A., 315 (8th C. C. A.) 127, 138
O'Reilly vs. Morse, 15 How., 62, 112, 121; 14 L. Ed., 601, 623, 627 ..... 154, 165
Packing Cases, 105 U. S., 566; 26 L. Ed., 1172 167
Permutit Co. vs. Harvey Co., 279 Fed., 713, 721 (2nd C. C. A.) 8
Railway Co. vs. Sayles, 97 U. S., 554, 564; 24 L. Ed., 1053, 1057 159
Rubber Co. vs. Goodyear, 76 U. S., 788; 19 L. Ed., 566 ..... 9, 145
Russell vs. Kern, 69 Fed., 94; 16 C. C. A., 154 (7th C. C. A.) 140
Sessions vs. Romadka, 145 U. S., 29 ..... 144, 145
Seymour vs. Osborne, 78 U. S., 516 125
Steward vs. American Co., 215 U. S., 161 159
Toledo Co. vs. Computing Co., 208 Fed., 410; 125 C. C. A., 622 (7th C. C. A.) 129

PAGES

Tyler vs. Boston, 7 Wall., 327; 19 L. Ed., 93 155
Warren vs. Owosso, 166 Fed., 309; 92 C. C. A., 227 125
Western vs. Ansonia, 114 U. S., 447; 29 L. Ed., 210 168
Westinghouse vs. Great Northern, 88 Fed., 258, 263; 31 C. C. A., 525 (2nd C. C. A.) 126
Westinghouse vs. Saranac, 108 Fed., 226 125
White vs. Dunbar, 119 U. S., 47; 30 L. Ed., 305 172
United States M. P. Co. vs. Hewitt Co., 236 Fed., 739, 742; 150 C. C. A., 71 (7th C. C. A.) 8, 149

DECISIONS ON THE PERKINS PATENT IN SUIT.

Perkins Glue Co. vs. Solva Waterproof Glue Co., et al. (D. C.), 223 Fed., 792 (1915) 50
Perkins Glue Co. vs. Solva Water Proof Glue Co., et al. (7th C. C. A.), 251 Fed., 64 (1918) 55
Perkins Glue Co. vs. West Michigan Co., et al. (D. C.), 279 Fed., 454 (1920) 88
Perkins Glue Co. vs. Holland Furniture Co., et al. (D. C.), 279 Fed., 457 (1921) 97
Perkins Glue Co. vs. Standard Furniture Co., et al. (D. C.), 279 Fed., 458 (1922) 101
Perkins Glue Co. vs. Gould Mfg. Co., et al. (D. C.), 280 Fed., 728 (1922) 105
Perkins Glue Co. vs. Standard Furniture Co., et al. (2nd C. C. A.), 287 Fed., 109 (1923) 114
Perkins Glue Co. vs. Crandall Panel Co., et al. (D. C.), 294 Fed., 135 (1923) .....
Perkins Glue Co. vs. Gould Mfg. Co., et al. (7th C. C. A.), 292 Fed., 596 (1923) 119
Perkins Glue Co. vs. Holland Furn. Co. (6th C. C. A.), 18 Fed. (2nd), 387 (1927) .....

Supreme Court of the United States

OCTOBER TERM, 1927.

No. 285.

HOLLAND FURNITURE COMPANY,

Petitioner,

vs.

PERKINS GLUE COMPANY,

Respondent.

BRIEF ON BEHALF OF RESPONDENT PERKINS GLUE COMPANY.

Brief Statement of the Case.

This suit was brought in equity by Perkins Glue Company, charging infringement of claims 13, 28, 30, 31 and 38 of Perkins' U. S. Reissued Patent 13,436 for Glue and Method of Making the Same.

For convenience the parties will be referred to herein as plaintiff and defendant as they were in the District Court.

The District Court found the claims in suit valid and infringed (279 Fed., 457) and entered an interlocutory decree accordingly (Rec., p. 340). Defendant, Holland Co., appealed, but this appeal was later withdrawn. An accounting was proceeded with under the interlocutory decree and the Master filed his report awarding the plaintiff, Perkins Co., $30,802.55 (Rec., p. 608). Thereafter and after the coming

down of decisions adverse to plaintiff in the 2nd C. C. A. (287 Fed., 109) and 7th C. C. A. (292 Fed., 596), the District Court reversed its interlocutory decree and entered a decree holding that most of defendant's glue did not infringe (Rec., p. 637). From this final decree plaintiff appealed to 6th C. C. A., which handed down an opinion in disagreement with said decisions of the 2nd C. C. A. and 7th C. C. A. and reversing the final decree of the District Court below (18 Fed., 2d, 387) (Rec., p. 645). From this decision of the 6th C. C. A., writ of certiorari was granted by this Court.

Prior to Perkins, numerous starch adhesives had been used for generations, such as the well known dextrine mucilage, library paste, and starch sizing solutions used for stiffening fabrics, much as starch is used in the laundry. Before Perkins no one had developed or invented a starch or vegetable adhesive which had the necessary qualities and adhesiveness of animal **veneering glue**; the exacting requirements of this art being such that the prior starch adhesives were inadequate therefor and different in kind from the glue of the patent.

In all the thousands of pages of testimony accumulated in the lengthy litigation on the patent in suit **there is not a statement by anybody to the effect that anybody ever satisfactorily glued together two pieces of wood with a starch glue until Mr. Perkins did it.** Nor is there a word of evidence to the effect that any starch adhesive was ever produced prior to Perkins which had the capabilities of gluing together two pieces of wood as is done in furniture veneering with animal glue.

Perkins produced this new starch glue and it has gone into wide and extensive use, supplanting the use of animal glue in furniture veneering and so revolutionizing the veneer gluing art.

The question before this Court as we see it, is whether, as plaintiff contends, the product claims of this patent shall be interpreted according to the clear and natural meaning of

their very explicit terms, or whether, as defendant contends, the claims shall have read into them the limitation that the product claimed is only covered when the product is produced by the particular preferred process or from the particular preferred base set forth in the Perkins patent.

Perkins in discovering this new glue product, necessarily discovered a method of making it and in the patent he describes his *preferred two step process*, for making the glue, according to which two step process, starch is treated in a first step with chemicals to degenerate it and produce a starch base, and then in a second step this starch base is dissolved in a limited amount of water with caustic alkali to produce the glue. **The patent also points out, however, that in many cases the first step or preliminary treatment of the starch may be omitted and the glue made directly from starch without the preliminary degeneration.**

Defendants' glue in question is produced by the latter method, but we submit since the *same product* is produced the product claims are infringed. Infringement of the process claims is not before this Court. **Only the question of infringement of the glue product claims 28, 30 and 31** is here involved. The process by which Perkins achieved his new product is discussed because certain of the lower courts have held, and defendant contends, **that the glue product claims are limited to Perkins' preferred process**, a conclusion which we submit **is unwarranted both in law and fact.**

Perkins attained his vegetable glue by using a starch not too far degenerated (i. e., not to soluble starch or dextrine) and by using therewith a small amount of water (about 3 parts or less based on the weight of the starch) and by dissolving with alkali instead of acid. **Defendants obtain the same glue** by using the same amount of water and also a starch which has not been degenerated to the dextrine or soluble starch stage, and dissolving with alkali like Perkins. The prior art did not mention any such glue nor did it tell how to make it. The prior art formulas failed to produce the glue of the patent mainly because they either used *sol-*

uble starch or dextrine, or bursted the starch with *acid* to produce a dextrine paste or else used *too much water.*

It is plaintiff's contention that no one before Perkins had made a glue having these essential characteristics, to wit: it is composed of starch which is dissolved without acid and in about 3 parts of water or less, and has substantially the adhesiveness and properties of animal veneering glue.

Perkins patent in suit was granted with five groups of claims, covering separate but related improvements, to wit:

(1) *Product* claims covering and characterizing the new glue as a wood glue comprising starch dissolved in about 3 parts or less by weight of water with caustic alkali and having the adhesiveness and properties of animal glue.

(2) *Product* claims drawn to a glue *base* as an *intermediate* product, comprising starch which has been degenerated to serve as a *base* from which to make the glue.

(3) *Process* claims drawn to the process of degenerating the starch with chemicals to produce said base (so-called first step claims).

(4) *Process* claims *intended* to cover the process of making the glue by dissolving the starch in about 3 parts or less of water with caustic alkali (so-called second step claims).

(5) *Process* claims drawn to cover specifically the two step process for maki g the ultimate good as animal glue, by first degenerating a starch with chemicals to produce the degenerated starch base and then dissolving the degenerated base in about 3 parts or less of water with caustic alkali to produce the glue (two-step claims).

The glue product claims in suit and the only claims in issue here are as follows:

> "28. **A glue comprising cassava carbohydrate rendered semi-fluid by digestion and having substantially the properties of animal glue.**

30. A wood and fiber glue formed of a starchy carbohydrate or its equivalent by union therewith of about 3 parts or less by weight of water and alkali metal hydroxid.

31. A wood and fiber glue containing amylaceous material as a base dissolved without acid in about three parts of water or less, and being viscous, semi-fluid and unjellified."

In claim 28 "cassava carbohydrate" means cassava starch, which was the kind of starch Perkins found preferable. Defendants also use the cassava starch.

The patent has been the subject of much judicial consideration in all of which these product claims were either held to be valid or their validity was accepted by the Court.

In the following cases these claims were held *infringed.*

Perkins Glue Company vs. Solva Waterproof Glue Company, et al., in the District Court for the Northern District of Illinois, where the late Judge Sanborn at final hearing held certain claims of each group, including the above mentioned product claims, valid and infringed (223 Fed., 792).

This decision of Judge Sanborn was sustained respecting the above mentioned product claims 28, 30 and 31 and some others, by the 7th C. C. A. (251 Fed. Rep., 64).

Perkins Glue Company vs. Hood, et al., and same vs. West Michigan Furniture Company, Western District of Michigan (279 Fed. Rep., 454), Judge Sessions holding all of the above quoted product claims and two process claims valid and infringed.

In this case in the District Court below Judge Sessions in his interlocutory decree held these same product claims 28, 30 and 31 valid and infringed (279 Fed., 457).

Perkins Glue Company vs. Standard Furniture Company, et al., Northern District of New York (279 Fed. Rep., 458),

Judge Cooper holding the same product claims valid and infringed.

Judges Sessions and Cooper accepted and applied the construction of the patent adopted by the 7th C. C. A. in the Solva case, and upon this construction based their findings of infringement.

In this case, the 6th C. C. A. below held these claims valid and infringed (Rec., 645-660).

In the following cases purporting to accept the construction of the patent by the 7th C. C. A. in the Solva case, the courts held *no infringement* on the ground that the product claims should be limited to Perkins' preferred two step process, although such process is not referred to in the claims in question.

Perkins Glue Company vs. Gould Manufacturing Company and Perkins Glue Company vs. Wisconsin Chair Company (280 Fed. Rep., 728), Eastern District of Wisconsin, tried together before Judge Geiger.

Perkins Glue Company vs. Standard Furniture Company, 2nd C. C. A. (287 Fed. Rep., 109), reversing Judge Cooper and holding the claims not infringed.

Perkins Glue Company vs. Gould Manufacturing Co., et al., 7th C. C. A. (292 Fed. Rep., 596), affirming Judge Geiger holding the claims not infringed.

Perkins Glue Company vs. Crandall Panel Co., Inc., in the Western District of New York (294 Fed. Rep., 135), the Court stating in effect that it was bound by the decision of the 2nd C. C. A. in the Standard Case.

The final decree of the District Court below in effect reversing its former decision and finding no infringement as to most of the glue involved (Rec., p. 637).

In all of the above cases the evidence as to the prior art and the place of the plaintiff's patent in the art was substan-

tially the same, and the character of the infringement was also substantially the same, as is set forth in detail hereinafter. Indeed, **none of the Courts has assumed to find any difference in the alleged infringing products.**

It is conceded, we understand, that these product claims 28, 30 and 31 are valid. It is also conceded, we believe, that **these product claims read squarely on defendants' product** in issue here.

The 6th C. C. A. below, therefore, quite properly held these claims valid and infringed.

The 2nd C. C. A. in the Standard Case (287 Fed., 109) and the 7th C. C. A. in the Gould, et al., Cases (292 Fed., 596), **found no infringement by reading into these product claims specific process limitations which are not there.** In other words, they found that the glue (although the same as that of the patent), was made by the one step process (without the preliminary step) and that these broad product claims are valid as covering the glue *only* when it is made by the two step process (including the preliminary or first step) with the result that these *product* claims 28, 30 and 31 (which are in no way limited on their face to whether the glue is made by the one step process or the two step process) have had read into them the specific features of the narrower two step process claims, making them of the same scope as the narrow two step process claims. This, we believe, is contrary to the well settled rule of law that **infringement cannot be avoided by reading into broad claims specific features or details claimed in narrower claims** (Los Angeles Co. vs. Aeolian Co., 143 Fed., 880, 885; 75 C. C. A., 88 (9th C. C. A.); Mast Foos & Co. vs. Dempster Co., 82 Fed., 327, 333; 27 C. C. A., 191 (C. C. A., 8th); Bresnahan vs. Tripp Co., 102 Fed., 899, 900; 43 C. C. A., 48 (1st C. C. A.); National Co. vs. American Co., 53 Fed., 367, 370; 3 C. C. A., 559 (3rd C. C. A.).

In alleged justification of their departure from this well settled rule of law, the 2nd C. C. A. and 7th C. C. A. decreed non-infringement on the ground, (1) that plaintiff filed a

disclaimer as a result of the early litigation on the patent, which had the effect to so limit those broad product claims to the two step process, (2) the prior art required such limitation, and (3) plaintiff failed to appeal from Judge Sanborn's final decree in the Solva Case.

The disclaimer question arose as follows:

The Reissue Patent 13,436 in suit contained 38 claims. After the decision of the 7th C. C. A. in the Solva suit (251 Fed., 64), plaintiff filed a disclaimer of "claims 1, 3, 4, 6, 7, 8, 16, 24, 25, 26 and 27" and disclaimed "from claims 9, 10, 11, 12, 13, 14 and 38 of said Reissued Letters Patent No. 13,436" certain subject matter (Rec., p. 231).

It will be noted that product claims 28, 30 and 31 which are the claims here relied upon, were deliberately omitted from the disclaimer and **no disclaimer was filed or intended to be filed as to them.**

It is our contention that since the disclaimer merely related to certain claims other than product claims 28, 30 and 31 in suit, **the disclaimer could not legitimately have any effect on said product claims 28, 30 and 31,** which were omitted from the disclaimer and as to which product claims no disclaimer was filed.

This contention is supported by Robinson on Patents, Vol. 2, Sec. 650, page 289, where it is stated that:

> "The disclaimer of a void claim does not affect such other claims of the patent as by themselves are valid."

In a number of cases the Courts have held in effect that a disclaimer with respect to one claim does not affect the scope of another claim not mentioned in the disclaimer. Graham vs. Earl, 92 Fed., 155, 158; 34 C. C. A., 267 (9th C. C. A.); United States M. P. Co. vs. Hewitt Co., 236 Fed., 739, 742; 150 C. C. A., 71 (7th C. C. A.); Permutit Co. vs. Harvey Co., 279 Fed., 713, 721 (2nd C. C. A.).

The decision of the 6th C. C. A. below is, we submit, therefore, correct in holding that (Rec., p. 659)

"The absence of any effect upon product claims resulting from a disclaimer which narrows method claims in the same patent, clearly follows from their mutual independence; there is no reason why there should be any such effect."

Such mutual independence was clearly pointed out by this court in Rubber Co. vs. Goodyear, 76 U. S., 788; 19 L. Ed., 566.

As to the second question, i. e., **as to whether the prior art required that these process details be read into these broad product claims,** in order to save them from invalidity, we submit there is no rule of law permitting the claims to be so changed. **If the glue is old** as defined by these claims, then **the claims are invalid. If the glue is new** and is not found in the prior art, then **the claims are valid** and there is no sound basis for holding the claims limited to the two step process. **This Court in McCarty vs. Lehigh Valley R. R. Co., 160 U. S., 110, 116; 40 Law Ed., 358, 361, held that an element cannot be read into a claim to save it from invalidity** or to make out a case of novelty or infringement.

As we see it, the decisions of the 2nd and 7th C. C. A., are in direct conflict with the law as laid down by this Court in McCarty vs. Lehigh, supra.

As to the third question respecting plaintiff's failure to appeal from Judge Sanborn's final decree, we need only point out, that said decree held the product claims here in suit **valid and infringed.** Plaintiff could not appeal from that holding in its favor no matter what Judge Sanborn's reasoning might have been. No appeal lies from a court's opinion or reasoning. Evans vs. Suess Co., 83 Fed., 706, 709; 28 C. C. A., 24 (7th C. C. A.).

We believe the 2nd C. C. A. in the Standard case and the 7th C. C. A. in the Gould, et al., cases reached the astounding result of non-infringement because **they did not under-**

stand the invention and the prior art, and the numerous questions which arose in the prior litigation.

Defendants' counsel (in those cases which held non-infringement) selected various statements from the prior decisions and from plaintiff's briefs and arguments in those prior cases, and used such statements wholly disassociated and isolated from the surrounding facts and circumstances in those cases respectively, thus giving to such statements a meaning and significance which we submit was never intended by those who made the statements. Thus statements which were made in the early cases with respect to process claims and glue base claims there in issue, defendants' counsel have treated as though applying to the product claims here in issue. Defendants' counsel have carried out this scheme of confusion in such a clever manner, that to anyone who does not master the details of the prior art, the history of the prior litigation and the facts and circumstances surrounding the same, the argument built up around such isolated statements will sound quite plausible and convincing, but, we submit, it will only appear so to one who has not a full and clear understanding of the prior art and of the facts surrounding the prior litigation. We, therefore, most earnestly request and urge this Court to bear with us in a quite full discussion of the patent, the prior art and the previous Court opinions. Our review of such facts and circumstances extends to page 122 herein. Our argument is embraced in pages 122 to 176, but we believe the argument cannot be fully understood without a careful study of this review.

DETAILED REVIEW OF FACTS.

Starch and the Meaning of Viscosity, Degeneration and Water Absorptiveness.

Starch is a carbohydrate, a complicated compound of carbon, hydrogen and oxygen of the formula $(C_6H_{10}O_5)n$

where n is four or more. Starch comes in the form of minute grains. Each starch grain is composed of an outer coating or cell-wall of very complex structure—called starch cellulose while the cell content which is less but still complex in structure is called granulose. Each starch grain is made up of many millions of molecules of varying complexity. Starches obtained from corn, wheat, rice, sago, potato, cassava, etc., vary and starches from the same kind of plants also vary considerably as to physical characteristics and properties. Cassava starch, such as referred to in the patent and used by defendant and Perkins, comes from Java where it is obtained from the cassava roots and purified for market.

Viscosity: Webster defines "viscosity" as "the quality or state of being viscous" and he defines "viscous" as "adhesive or sticky and having a ropy or glutinous consistency."

Ordinary starch is a dry powder. When we speak of the viscosity of starch, we mean the viscosity of a solution of starch. When testing the viscosities of different starches for comparison, a standard method of solution with the same proportions must be adopted. Different chemists use different methods which are not directly comparable.

Difference in viscosity of starches is supposed to be due, to the difference in the size or complexity of the starch molecules, the larger or more complex molecules producing greater friction and, therefore, greater viscosity in the solution.

Degeneration of the starch is supposed to change it by splitting up the larger molecules (not the starch grains) into smaller molecules, so that it produces less viscous solutions when dissolved in the same proportions in the same way. Degeneration of starch may be accomplished by a limited action of acids, alkalis and certain other chemicals thereon; also by bacterial action and fermentation, and it is believed that differences in the cultivation of the plant result in the production therefrom of starches degenerated to different degrees and therefore having different viscosities.

Water-absorptiveness as used in the patent means that different starches when dissolved in the same way require different amounts of water to produce a solution of the same viscosity.

The terms "water-absorptiveness," "viscosity" and "degeneration" are therefore used more or less interchangeably. A starch which is relatively little degenerated is one of relatively high viscosity or high water-absorptiveness, while a more degenerated starch is one of lower viscosity and less water-absorptiveness.

When starch as it comes from the plant is treated with small amounts of certain chemicals it is gradually degenerated. If the treatment be sufficiently continued the starch goes through a considerable range of decreasing viscosity until it reaches what is called "soluble starch" which the patent says is unsuitable for making veneer glue. If the treatment be further continued dextrine is obtained which is used for common mucilage and the backing of postage stamps and the like. Further treatment may result in the production of glucose, one of the sugars. Both dextrine and glucose are unsuited for making veneer glue.

The viscosity of Perkins and defendants' glue is quite different from the viscosity of the starches from which they are made as ordinarily tested because they are ordinarily tested with different proportions of water and under different conditions than when the veneer glue is made therefrom.

The Requirements of a Glue for the Wood Panel or Furniture Veneer Industry.

The gluing together of wood layers is quite a different proposition from the sticking together of pieces of paper and the like for the wood is far more porous than the paper. For the successful gluing of wood as in furniture veneering, the glue must penetrate the wood far enough to obtain a firm rootage in the pores of the wood but not so much as to

be substantially all absorbed in the wood, leaving insufficient glue between the layers to make a strong joint between the wood layers. If on the other hand the glue is too stiff or gelatinous it will not penetrate the wood pores sufficiently to become firmly attached thereto.

The requirements of a glue for the furniture veneer industry are well exemplified by a good quality hide (animal) glue. It was the standard. Any glue to be useful in this art must measure up fully to this standard and must have the necessary qualities of this animal glue.

In furniture veneering where wood layers are glued together to make built-up panels, etc., the glue is spread onto the wood layers by large spreading machines having rolls which dip into glue troughs and transfer a layer of glue therefrom to wood sheets which are fed between the rolls. The wood sheets are then placed together and held under pressure until the glue has set sufficiently.

The glue must be substantially homogeneous and not contain suspended matter which would clog up the pores in the wood (as is the case with certain prior art adhesives used for sticking paper and the like) and thus prevent the glue from taking a firm rootage in the wood layers.

The glue, in commercial operations, is mixed in large mechanically agitated kettles from which it flows through pipes to the spreading machines. Therefore, the glue must be capable of being mixed by stirring so as to become homogeneous and sufficiently fluid to flow through the pipes. It must not quickly stiffen or gelatinize so as to clog up the pipes or prevent the glue from taking a firm rootage in the wood. *The glue must have low water content comparable with that used with animal glue in this industry (about 3 parts or less of water to one of glue base) because too much water not only delays drying and warps the wood but leaves too little actual binding material in the joint.* The glue must not be too hygroscopic when dry. If it absorbs too much moisture from the air it makes the joint weak and the furniture would likely come apart in damp weather. It also must

not dry out so much, when exposed to high temperatures that it becomes brittle and breaks up. This would weaken the joints placed near radiators and the like. The glue in the joint must have elasticity so as to be capable of bending as the wood bends under various atmospheric conditions and hard usage. The actual **tensile strength** must be high. It **must be much greater than the lateral strength of the wood** itself (which is around 800 to 1,000 pounds per square inch) in order to provide an ample margin of safety.

These essential qualities of a furniture veneering glue and the machinery used to handle the glue, are discussed by Dr. Grosvenor (Rec., 113-120).

Perkins' Early Work at Poplar Bluff.

In 1904 Mr. Perkins was raising cassava starch in Florida, and he or his company, the Planter's Manufacturing Company, had a plant at Lake Mary, Florida, at which they were degenerating starch with various reagents and to various degrees for the purpose of making sizing starch for cotton goods, paper, carpet cops and cordage, and also for the purpose of making paper-box adhesives and laundry starch (Rec., 737, 738, 746). The business was not successful, and in 1905, Mr. Perkins and his company were heavily in debt and in very urgent need of ready money to carry on the business. Mr. Perkins obtained the sympathy and interest of a Mr. Palmer who was then at the head of a plant at Poplar Bluff, Mo., which was manufacturing veneered sugar barrel heads, and Mr. Perkins pursuaded him to try these degenerated starches to make an adhesive for gluing together these barrel head layers at Poplar Bluff, and succeeded in getting Mr. Palmer to take large quantities of the starch, which had been hypothecated with banks (Rec., 743, 744, 745).

Mr. Perkins at that time had no conception of the invention of the claims in suit. He was manufacturing sizing, paper-box adhesives and laundry starch. Failing to profita-

bly market these and learning of the use of casein glue at Poplar Bluff, he apparently decided to see if his starches could not be used for this purpose. He was very persuasive, for he succeeded in getting the Poplar Bluff people to take more than they needed even before the adhesive had been given any practical trial on the wood barrel heads.

The Poplar Bluff concern is the only one in the country making barrel heads by gluing together the wood layers. **This gluing up of barrel heads is radically different in its requirements from regular veneering. No such strong adhesive or joint is required** (Rec., 718, 729, 740). It is only required to hold the head together until the barrel reaches its destination (Rec., 718).

With this easy proposition, Mr. Perkins made a few small tests in the latter part of February, 1905, at Poplar Bluff, and without trying its spreadability and flowing qualities, in any proper way, succeeded in securing a year's contract the first of March, 1905. Just how he mixed up and dissolved his starch in these small preliminary tests, or how far the starch was degenerated, nobody knows. But it is perfectly clear that when he later began to try his starch adhesives on a large scale, he encountered all kinds of trouble, which did not cease until long after 1906.

The first test of the glue (not the glue of the patent in suit) about April, 1905, was unsuccessful. The glue would not flow through the pipe to the spreader and it was so heavy it broke the agitators (Rec., 681) and they had so much trouble with it that they went back to using the old casein glue again (Rec., 680).

This failure occurred after about 135,000 pounds of Perkins' starch had been shipped to the Poplar Bluff plant. The Poplar Bluff concern having bought so much of this starch material, and Mr. Perkins of course desiring to make it work, if possible, he continued experimenting. To overcome the trouble of agitators breaking, new agitators and shafting were provided, but then they still found the mixture too heavy to flow through the pipes, and Mr. Perkins

had to change the formula for mixing it and add more water, and this was found to be very bad for the sticking qualities and setting qualities of the adhesive and Mr. Perkins ordered some different kind of "glue," and they were always making changes to make the "glue" flow through the pipes. The various mixtures would not set quick enough in the retainers, and other changes were made (Rec., 681).

Mr. Perkins evidently succeeded in getting some fairly promising results about May, 1905, as in June, July and August, 1905, three more shipments of starch material were made to the Poplar Bluff concern (see invoices, Rec., 1005-1008), but we find that after the August shipment, no further starch material was sent until June 4, 1907, two years later (Rec., 738, 1008). They continued trying the so-called Perkins glue until August, 1905, when the glue plant was shut down until November 13, 1905. The plant was also shut down from August, 1906, until May, 1907 (Rec., 914).

This starch adhesive (dry starch base), came in bags marked L and in bags marked H, signifying light and heavy (Rec., 682). With four parts of water, the light would mix too thin and heavy too thick, so they tried mixing them together. They then found the glue was frequently sloppy and it would not set properly, so they would change the proportion, but finally decided on **4 parts** of water (Rec., 683, 684). The starch was dissolved in the water with 7 per cent. of caustic soda. When using this caustic it so affected the hands of the men that great trouble was experienced until they finally got gloves for the men's hands (Rec., 684).

Mr. Perkins was continually coming back to the Poplar Bluff to try and remedy troubles and make the glue work satisfactorily (Rec., 686, 690). It was impossible to tell whether the glue was satisfactory until the glued up heads were taken out of the retainers (presses) and it would then likely show up bad and spoil a carload of stock before one knew it. One batch would seem all right and the next one wouldn't, but the foreman had been instructed

to use the glue and was doing the best he could (Rec., 686, 687). It seemed they were never able to get it properly proportioned and the foreman was disgusted with it. This was apparently after 1906. The foreman Baker testified that "a heap of times they would never know anything about the stock being glued up bad until they would get a report on it from New York" where the heads were sent (Rec., 687). As late as December 30, 1906, Mr. Perkins was having trouble with his mixtures (Rec., 689), and Mr. Perkins had gotten up a new form of spreader and they were trying a new and different formula as late as February, 1907 (Rec., 689).

The starches which were used in this early work at Poplar Bluff varied greatly. They were, however, in the commercial work, always dissolved in **4 parts of water** in making the adhesive, **and resulted only in such weak adhesives and objectionable in other respects that it was only with the greatest difficulty and continued experimentation that the adhesive was used for gluing up these barrel heads. The adhesive did not have the critically small amount of water (about 3 parts or less) nor the adhesiveness and other necessary qualities of animal glue** required in regular furniture veneering. The 7th C. C. A. in the Solva Case so held (See p. 162, *infra*). Mr. Perkins had tried to use less water, but the mixture was so heavy it would not flow through the pipes, so that they had to use more water (Rec., 681) and it appears that even with 4 parts of water, the batches were oftentimes too thick (Rec., 775). It may well be that some of the starches which were used at Poplar Bluff were capable of making the good as animal glue of the patent, if they had been suitably dissolved in 3 parts or less of water with the solvent. But neither Mr. Perkins nor anyone else at that time knew this or how to obtain such a glue. *It was not known that such a starch glue was possible.*

That what was done at Poplar Bluff in 1905-1906 did not embody the invention in controversy is shown by the fact that during and after this period, Mr. Perkins tried to use starch adhesive in regular veneer factories and either com-

pletely failed or else did not succeed until long after November 2, 1906.

We will briefly consider each of these failures chronologically.

Perkins' Failure at Cairo in 1905.

Some tests were made at Cairo in 1905 and some panels built up. The people told Mr. Perkins they would consider the matter some time later, and it was more than a year later before they again took up the matter (Rec., 771), so that no use of the glue was made at Cairo in 1905 other than a small test. When they again took up the matter at Cairo in 1906, they had trouble (Rec., 688, 689). The requirements at Cairo on sewing machine table tops made it necessary to take precautions that were not necessary at Poplar Bluff (Rec., 691). A much stronger joint was required at Cairo for table tops than at Poplar Bluff for sugar barrel heads.

Perkins' Failure at Wilts.

There are some scattered references in the testimony of defendants' witnesses regarding Mr. Perkins trying out vegetable adhesive at the plant of the Wilts Veneer Company, Plymouth, N. C. This was in the latter part of 1905 (see Letter No. 65, Rec., 953), or the winter of 1905-1906. Some of the material shipped there by Mr. Perkins was raw starch and some was treated starch (Rec., 780). Mr. Perkins went there, off and on, for a short time, but he had to take back a large quantity of the material he had shipped them and pay them something like $2,000 for the goods he took back. It would not make a strong joint. It was not even strong enough for the joints these people were using in the making of box shooks, also an inferior class of work (Rec., 772).

Perkins' Failure at Frost's in 1906.

Mr. Perkins tried out starch as an adhesive at the Frost Veneering Seating Co., Jersey City, N. J., in the early part

of 1906, and the result was that Mr. Frost was not satisfied with the work turned out with Mr. Perkins' adhesive and Mr. Perkins removed all his apparatus and material from the Frost plant (Rec., 740). Mr. George L. Frost, of this company, says they gave Mr. Perkins carte blanche at the Jersey City factory and Mr. Perkins shipped his machinery and glue base there and he glued up several panels used for parts of furniture for interior decoration. Mr. Perkins, however, was unable to prove that his glue was satisfactory for this work. It was wholly unsatisfactory principally because it would not hold—the veneer could be easily torn apart, and the Frost Company went back to using hide (animal) glue (Rec., 785-788).

Perkins' Failure at First at the Singer Company's Plant, South Bend, Indiana, 1906.

Mr. Perkins came to the Singer Company plant at South Bend, to test and try out a starch glue in the fall of 1906. He encountered troubles there and had to stay until the fall of 1907, Mr. Wenrick helping practically all the time to try and get a mixture that would work (Rec., 781).

These troubles were of all sorts; trying to get a mixture that would flow so they could spread it and at the same time get the set and strength. Sometimes the mixture would become short and not remain fluent. Other times it would separate and become watery. They also experienced trouble with the mixture not setting and the glue in the joint not drying, so as to form a sufficiently strong joint. The joints would be damp inside, i. e., they had trouble with soaked joints. They experienced conditions of this kind, until at last Mr. Perkins reached a solution of the problem by mixing in certain proportions a starch base, water and caustic, which gave a mixture fluent enough to be properly spreadable and workable and which gave the strength and set they needed for such a wood joint as they were trying to make, i. e., veneers for sewing machine tops. But **Mr. Perkins did not get these results until about September, 1907** (Rec., 781, 782).

In the meantime Mr. Perkins was trying all sorts of things. He had tried many different percentages of caustic and water with and without heat. The glues which Mr. Perkins tried in the early part of 1907 at the Singer plant could not satisfactorily do the work required on the sewing machine veneers (Rec., 782, 783).

Mr. Stryker who was helping Mr. Perkins, confirms Mr. Wenrick, that Mr. Perkins was unable to make a glue satisfactory for joining regular veneers, until well into 1907, and tells of the difficulties encountered (Rec., 741-743). On one occasion he was so discouraged he resigned. He was disgusted with the proposition of trying to make wood glue from starch and get it into successful use, but later decided to go on a little longer (Rec., 772).

What was done at Poplar Bluff was not the invention of the claims in suit, but something quite different. It may have indicated progress along the road but it had failed to reach the goal. The Poplar Bluff adhesive was no more than a good paper mucilage or paste. Mr. Perkins' attempts at Cairo, Wilts and Frost's were failures and his eventually successful work at the Singer Co. plant in South Bend was too late (1907) to serve as a two-year public use prior to application for patent in 1908.

The Specification of the Patent in Suit.

Since defendants' counsel have contended that the specification of the patent shows that the whole invention is limited to the two step process, or to a particular base used in the process (which contention we controvert), we will consider the specification in some detail (the patent is found at p. 247 of the Record).

It was while Mr. Perkins was experimenting at the Singer Co. plant in South Bend that **he first discovered a vegetable glue comprising starch dissolved with caustic in about 3 parts or less by weight of water** (instead of 4 parts as at Poplar Bluff) **which glue had the adhesiveness of animal**

glue for furniture veneering and the necessary properties of animal glue for that art, in that it was viscous yet semi-fluid, spread properly with the machines, and had the necessary quick drying and setting qualities and made a permanent joint like animal glue.

This was Perkins' *product* invention, i. e., the *product* invention here in suit. This product defendant makes. This product the 6th C. C. A. below has held to be infringing. This product the 2nd C. C. A. and 7th C. C. A. held non-infringing.

Perkins also claimed in his patent certain *process* features. We hesitate to discuss these process features because a mere discussion of them tends to lead one to believe that the invention in controversy depends on the process, whereas the patent covers a plurality of inventions or inventive ideas; the product, and also the process, covered by separate claims.

The patent (Rec., p. 247) states that the "invention relates to *improvements* in glue and *method of making the same*" and particularly "from carbohydrates containing amylo-cellulose," i. e., from starch. The patentee thus made it clear that he not only claimed the new glue as a product but also his process of making it as a separate invention.

After referring to the ordinary starch paste such as used for wall paper and the like, the patent states (p. 1, line 26):

> "Such pastes have not the necessary relative 'tack' *viscosity, cohesiveness and tenacity to spread and adhere properly when applied as wood glues.* Such pastes in cooling also become extremely thick and jelly-like and are practically *unsatisfactory for woodwork* when originally made with water, or diluted after cooking, because *water warps the wood and delays drying* and the pastes do not set hard enough and are not dense and elastic enough when dry. If more water is added in an attempt to make it more *fluid,* the paste becomes so weak and diluted that it has practically no power and would be wholly unfit for most classes of work, especially *wood joints,*"

and the patentee therefore states that it is his object to produce a glue (p. 1, line 45)

> "which will not have the disadvantages just pointed out, but which will be exceptionally tenacious and powerful but still *amply* fluid for easy application."

The patent points out that the final glue product of the patent is one adapted for *wood* joint work and parallels *animal glue* in respect of *water contents, adhesiveness* and *other properties* (p. 4, lines 92-108), and the patent further says (p. 1, line 51) that it is the object of the invention to produce a starch glue which may be practically used for the same purposes as the best animal glue.

The law requires that every applicant for a patent for a new product or composition of matter shall describe in his specification at least one way of making it. There may be a great many ways of making it but the applicant must describe at least one method. And he may also claim his process of making it or he may claim only the product itself. To fulfill the requirements, Perkins described in his patent in very great detail a method or process by which his starch wood glue could be made and he says (p. 1, line 68):

> "To do this I first take a carbohydrate of the proper kind, and treat it with a reagent to decrease its water absorptive properties in the sense that to render fluid the finished glue, comparatively little water will have to be added and the final glue will not thereby become *seriously diluted.* The reagent I use I call a starch converting agent because it is believed it exercises, at least in part, a hydrolyzing or oxidizing or converting action similar to that of the well known starch converting agents, many of which have been used to convert starch into soluble starch and dextrine. I may use any suitable starch converting agent but the action I produce is preferably much less complete since it is not my object to convert the starch wholly but only to effect its physical properties when put into solution or dissolved

to form glue. The effect of this treatment is also that it *decreases the viscosity of the glue produced with a given amount of water without detriment to its 'tack,' quick adhesive properties and cohesion.*"

In other words, according to Perkins' *preferred process,* he produces a reduction in viscosity in the starch *before* he dissolves the starch with the water and caustic to make the final glue, and this step of preparing a converted or degenerated starch base has been termed his preliminary degeneration treatment or *first step.*

Then, at lines 18 to 88, page 2, the patent describes in great detail a method of preparing the *base* by degenerating the starch with acid, care being taken not to convert or degenerate the starch too far to soluble starch or dextrine. This treatment to reduce the viscosity of the starch is carried out by treating the starch with a weak acid solution, and when the viscosity has been reduced to the desired degree the acid is neutralized and the starch drained and dried, and the patent then states (p. 2, line 89):

"In commercial use I preferably ship the dry material, obtained as above, to the consumer who carries out the second part of the process at the place where the glue is to be used, but if *desired the first and second parts of my improved process may be carried out together.*"

Then the patent, still describing this *preferred process,* says (p. 2, line 96):

"In carrying out the remaining steps in the preparation of my improved glue, the dried base, obtained as above, is mixed with *about three parts or less* by weight (of dried base) *of water* according to the strength of the joint and economy desired. The dried base does not materially go into solution in the water unless heat is applied, but a liquid suspension is thereby formed which is agitated and treated with a solvent of cellulose, as for example, an aqueous solution of caustic soda or potash alkaline to phenol-phthalein, using if cold from

six to ten per cent. of the weight of the dry base, of caustic soda or its equivalent of caustic potash. The alkali, I believe, acts chemically to unite with one or more starch molecules and with the water to form a colloidal compound. The alkali is best added in the form of a solution of from 33% to 50% strength. Sodium and potassium hydrates are the most available and among the most powerful of the known solvents of the starch cellulose and are well adapted for most purposes."

The patent then gives a specific example (beginning at line 121, p. 2) using 100 pounds of the starch base, 225 pounds of water, and 10 pounds of caustic soda in the form of solution, the caustic being added slowly, during 15 to 20 minutes with constant stirring. When following this preferred method, the patent describes the appearances of the mixture, beginning at line 10, page 3.

When all the caustic soda solution is added, the batch is completely converted into the final good as animal glue ready for use.

The patent explains (p. 3, line 42):

> "The word 'compound' is here used in the more modern chemical sense of matter connected within the limits of some quantitative relation to produce a *definitely recognizable product having certain definite physical characteristics.*"

The patent next points out, in lines 48-59, page 3, that heat may be used and (p. 3, line 105) that:

> "The action of heat replaces the action of a portion of the caustic in transforming the glue base" into glue.

The heat should be carefully regulated, as noted in lines 103 to 105, page 3. Defendant uses such heat and, thereby, reduces the amount of caustic from between 6% and 10% down to about 3%.

The patent further says (p. 3, line 60):

"As previously stated, when *ordinary* starch is heated with water, it absorbs enormous quantities of water, and if only two or three parts of water are used becomes of a stiff jelly-like form which must be very much diluted before it will be practically workable. I find, however, that using my improved glue base and method of mixing the same, this water absorbing power can be greatly reduced and can be regulated, although the mixing is done with the same proportion of alkali and carbohydrate or else the same temperature, which have hitherto produced unworkable jellies or weakly adhesive pastes or mucilages."

What is meant by "ordinary starch" is, of course, the ordinary or general run of starch on the market **at the time the application** was filed, not the ordinary cassava starch of today. The testimony shows (Rec., 41, 42) that the so-called raw cassava starches as they come on the market have greatly decreased in viscosity during recent years. Starches which Mr. Perkins then found unworkable in three parts or less of water with the machinery then available are now quite workable because of this decrease in viscosity (degeneration) and the improved machinery which is now available. With improved double-acting agitators in the mixing kettles, it is now possible to handle starches in three parts of water which are higher in viscosity than the preferred degenerated base of Perkins. And by being able to so handle them, *it is possible now to produce a substantial reduction of viscosity in the second or dissolving step* of making the glue, so that the end product, the final viscous, semi-flued glue, is the same identical substance as that described in the Perkins' patent. **This is what defendants do.**

That the patentee contemplated that the glue might be made in this way is evidenced by the statement in the patent (p. 3, line 78):

> **"Thus, by proper adjustment of conditions of mixing I am able to produce this glue even with certain grades of untreated cassava carbohydrate and with other starches and conversion products (starchy carbohydrates)."**

In other words, while he prefers to first degenerate or convert the starch before dissolving it to make the glue because it is then easier to handle in the mixing machinery, it was pointed out that, even at that time, "certain grades of untreated cassava" could be used "to produce this glue" "by proper adjustment of conditions of mixing."

As Dr. Grosvenor testified (Rec., 130)

> "at the time of Perkins' application there were various starches on the market that required no preliminary treatment, in spite of that, it is nevertheless true that many of them did require treatment and they did not run particularly uniform. It was preferable, therefore, as pointed out, to use starches of high viscosity and degenerate them. In recent years the supply of starches on the market, the water absorptive properties of which are already reduced, is very much greater; they are more plentiful, and they are being marketed in far more uniform condition; therefore the necessity for preliminary treatment has, to a very great extent, disappeared."

The patent further says (p. 3, line 90):

> "In the second part of my improved process, less than **about three parts of water** by weight to one part of the dry material are used and after adding the solvent it is found that even with such a small amount of water, the batch will assume a *semi fluid* consistency much superior to that ordinarily obtained by the use of water alone and will not become jelly-like and tough as in former processes."

It is noted that the patent does not here describe the glue as "fluid," but as "*semi-fluid*" and it is elsewhere also described in the patent as being viscous. The patent does not describe the glue as a thin glue.

The So-Called Tests for the Base.

Reverting to Perkins' **preferred** process the patent describes a degeneration first step treatment with sulphuric acid, although it says other equivalent chemicals may be used. Following the description of that specific degeneration step it says (p. 3, line 121):

"One way which has been found quite satisfactory for determining when the action of the *acid or its equivalent*, and the agitation, have been carried far enough in the first step, is as follows:"

Then follows a detail description of a **9 to 1 boil up viscosity test** and the Perkins' viscosimeter to be used therewith (p. 3, line 127, to p. 4, line 34). The patentee does not give this as a universal test of his invention, but merely as *"one way"* which he found "quite satisfactory for determining when the action of the *acid or its equivalent"* has been "carried *far enough* in the first step." The test was obviously intended to be applied only to a *base* degenerated by the sulphuric acid or its equivalent, and then only to determine when the degeneration had been carried "far enough." It was not a limiting test of anything, but only a "quite satisfactory" test indicative of his preferred base. It can certainly have no bearing on the scope of the *finished glue product invention.*

The patent says (p. 4, line 40):

"When treated in accordance with my process, I find that the carbohydrate glue **base may be formed into glue by using only from one to three parts of water,** the more water used the greater the delay in drying."

Defendants' glue base is formed into glue by using only from one to three parts of water.

Then, as a further guide-post to enable the novice to readily reach the desired result, but, again, not as any limiting test, the patent says (p. 4, line 74):

"Also, in actual practice I have found that a good glue is produced by treating the base with the chemicals to reduce the water absorbing power to a point where the base if mixed with from 2 to 3 parts of water and subjected to heat of 170° F. would result in a syrupy condition instead of a thick jelly-like mass."

This is an alternative test for the 9 to 1 boil up test and like the latter it is merely indicative of his preferred base.

Even within this now disclaimed and so irrelevant field the fact that two different tests are given for the same determination shows that neither is a limiting test in the sense of the patent law. They are merely examples of Perkins' **preferred method** of reaching the veneering glue. They are not examples or tests of the glue. It is physically impossible to apply them to the glue product. Neither of these tests state that if the base is not so far degenerated it will not make the glue. The limiting test, and **the only limiting test in the sense of the patent law is the test given by the claims in issue, i. e., does the glue have the characteristics recited in those claims?**

With this **defendants' expert** is in agreement for he says (Rec., 178):

> "Both of these tests I judge are intended to describe certain characteristics of the Perkins base [and] not to be understood as injunctions as to methods of use. He is describing what his product will do, but is not suggesting that you apply that method to it if you are going to use it commercially. At the other points where he suggests the solution in caustic alkali he is telling you how he wants to use it commercially. **His fundamental and final determining test is apparently the fact that it forms a glue with one to three parts of water.**"

The patent speaks of the importance of low water content, saying (p. 4, line 85):

> "Practically all the water must be later removed that goes into the glue solution and is applied to the joints, hence an increase of water in the glue solution involves changes in drying methods, or in drying time, or in risks of injury to the material due to warping by the extra water, all of very serious consequence."

The small amount of water (1 to 3 parts) is characteristic. Any material increase in water can not be tolerated in the veneer industry for the various reasons pointed out.

Perkins glue does not vary in the same manner and is not subject to the same causes of deterioration as hide glue. The glue does not require hot plates nor a carefully regulated temperature during application like animal glue.

At page 4, lines 114-122, the new glue is described as

> "transparent and free from odor, and is very stable after mixing for use, it is instantly adhesive to clean surfaces, *its cohesion is very great* but not sufficient to overcome its adhesion and its viscosity is lasting and low enough to permit ready application, but so proportioned to its cohesion that *it is capable of being applied by machinery like hide glue* * * *."

The application of animal glue by *machinery* was characteristic of the *furniture veneering* art.

The Practical Tests for Veneer Glue.

To determine whether any starch glue has substantially the properties of animal glue for veneering the best and probably only satisfactory test is to try it out on a commercial scale in a furniture veneer gluing factory. No laboratory test seems to be sufficient to prove that such a glue can be used as a substitute for animal glue in furniture veneering. There are some tests, however, which may indicate that the glue is not suitable. For example the glue may be applied by hand to two blocks of wood and these stuck together and the number of pounds per square inch required to pull the blocks apart may be ascertained. The glue should test materially over 1,000 pounds per square inch. If it does not, it does not measure up to the regular grades of animal veneer glue. Dried film of the glue may also be tested for tensile strength (Rec., 132, 133). These tests, however, do not determine the permanence of joint, nor the spreadability, penetration, contractility, etc., in commercial operation and since all of these affect the strength of resulting joint between the wood layers the only satisfactory test is a test of the glue in commercial operation (Rec., 136).

The testimony shows that the Perkins glue will produce test block joints requiring **1,500 pounds and upwards** per

square inch to break them, whereas with good grades of animal veneer glue the strength varies from 1,300 to around 2,200 pounds per square inch. The cohesive strength of a dried film of Perkins' glue runs around 8,000 pounds per square inch, amply in excess of anything that is likely to be required for a wood joint (Rec., 132, 133).

The patent was granted March 19, 1912, and reissued as No. 13,436, July 2, 1912. In reissuing the patent no change was made in the claims. The main reason for reissuing the patent was this. The patent as originally issued stated that in carrying out the *process* in the preferred form the base could be degenerated to a point where it showed a viscosity between that of water and 3 times that of water on the so-called 9 to 1 boil-up test, and it turned out that this was meaningless unless the nature of viscosimeter used was known. Therefore, the patent was reissued to include a description of the particular viscosimeter to be used to obtain this viscosity in the base. Again, this has merely to do with the process of making the preferred base and has no bearing on the scope of the final glue product invention.

The *final glue product* invention was claimed independently of the two step process and irrespective of the condition of the starch base from which it was made, for the patent **claims it broadly** and also states, as specified above, that **the final glue may be made directly from untreated starch and without using the first step of the process.**

The Prior Art.

We will now discuss what we believe are the only important prior art patents and publications.

The Gerson & Sachse German Patent 167,275 (Rec., 275) and Virneisel French Patent 337,001.

Both patents describe the same process and product. The process consists in taking raw potato starch and treating it

with a given quantity of alkaline chemicals in water for a given time to degenerate the starch after which the starch is dried and sold for a sizing base. The *base* is the particular product of the patent, but it is stated that it may be dissolved in 20 parts of water or in 20 parts of a 2% caustic soda solution (Rec., 278), and so dissolved it is a typical **sizing** glue for the sizing industry.

It was the belief of plaintiff in the Solva case that the base produced by the process of this patent (when using regular German potato starch as starting material) differed somewhat from the preferred form of Perkins' base. The defendants in the Solva case argued that it was the same as the Perkins base, and invalidated the claim 24 for the glue base as a product. They also contended that the degeneration or first step treatment described by Gerson & Sachse invalidated the first step process claim 16. It will also be noted that Gerson & Sachse described a two step process in which starch is first treated with chemicals to degenerate it and then it is dissolved by a second step in water with caustic to make an adhesive (size). Defendants contended this was the substance of the two step process claims of the patent. But the only directions which Gerson & Sachse give for dissolving the base, are as follows (Rec., 278):

> "The vegetable glue in the dry form (the glue base) possesses the appearance of natural starch • • • yields when dissolved even in the proportion of 5 to 100 in water or in 2% caustic solution, a thick mucilginous liquid which is neutral and free from ash." (Part in parenthesis ours.)

The object of Gerson & Sachse was to produce a vegetable sizing glue (i. e., a starch base) in dry form which would dissolve up similar to gum tragacanth for sizing and dressing textiles, and bearing this in mind, the proportions above stated are the typical proportions one would expect to use (Rec., 209, 210), and, of course, a glue having the characteristics of Perkins' glue was not developed or discovered.

That is, **Gerson & Sachse proposed to dissolve their base in 20 parts of water or 20 parts of 2% caustic solution, to one of starch base, whereas Perkins and defendants use about 3 parts or less of water and caustic.**

The Gerson & Sachse fluid mucilage or sizing when tested to determine its properties as a veneer glue, falls down completely. The strongest joints on the block test that could be obtained with it did not exceed 390 pounds per square inch, whereas over 800 to 1000 pounds is required and Perkins and defendants and animal glue for veneering give from 1500 to 2000 pounds and over per square inch. The films of the Gerson & Sachse adhesive curled badly and the "penetration was very excessive; unless extreme care was used no material would remain in the joint. The viscosity was prohibitively small for regular practical application. The technical product to which the patent is addressed, and which it discloses, is totally unfit for woodworking purposes" (Rec., 211).

The main difference between Gerson & Sachse and Perkins is the **proportion of water.** By reason of this difference Gerson & Sachse failed to disclose either the ultimate Perkins semi-fluid glue or any process of making it, and therefore, as we shall later more fully point out, the 7th C. C. A. in the Solva Case sustained the claims for the *final glue product.* In spite of this, defendants' expert proceeded to dissolve the Gerson & Sachse base in 2 and 1/10 parts of water and caustic instead of dissolving it in 20 parts of water or 20 parts of 2% caustic soda solution as Gerson & Sachse direct. In other words defendants' expert used Perkins' small amount of water, with the Gerson & Sachse base instead of dissolving it with 20 parts of water as Gerson & Sachse describe. The result is of course immaterial (Rec., 184).

We may assume the resulting glue (using 2 1/10 instead of 20 parts of water) was substantially the same as Perkins, or within the Perkins' range, and that it would produce breaking strengths on block joint tests comparable with

Perkins' glue and animal veneer glue. The fact that this socalled (but not truly called) Gerson & Sachse glue, was capable of commercial use on veneers at New Albany or produced excellent joint tests at Armour Institute is entirely irrelevant and immaterial. It was not Gerson & Sachse glue but was Perkins Glue (Rec., 212).

Defendant's expert added Perkins discoveries to those of Gerson & Sachse and Virneisel and used Perkins proportion and not those of Gerson & Sachse in order to attempt to demonstrate that such art contains everything Perkins discovered. Patents can not be anticipated in this manner. Ludwigs vs. Payson Mfg. Co., 206 Fed., 60, 64; 124 C. C. A., 194 (7th C. C. A.); Johns-Pratt Co. vs. Snow, 212 Fed., 173, 176; Asperin Case, 171 Fed., 887, 889 (affirmed 179 Fed., 701).

We do not contest the point (decided in the Solva Case) that Gerson & Sachse disclosed a starch base equivalent to the Perkins base. Therefore the only important difference between Gerson & Sachse and Perkins is the proportion of water used. We contend that the critically small amount of water used by Perkins resulted in a new and patentable *product*, differentiated from the prior art by the fact that it contained only 3 or less parts of water and had the essential properties of animal veneering glue. If this *difference in amount of water with the resultant difference in product*, is ignored, then it would follow that the **whole Perkins process and his glue product is unpatentable and all of the claims of his patent are invalid**, and all of the Courts which have passed on the patent have erred in giving it any validity whatsoever.

This Gerson & Sachse patent was the prior patent which the defendants in the Solva Case stressed most and which the Courts in that case considered the closest prior art, and as we read their decisions they held that the product claims here in suit were not anticipated thereby, solely because of this difference in the amount of water which resulted in a *different kind of glue having different properties*, i. e., the essential properties of animal veneering glue.

Dorneman French Patent 232,781.

This patent is printed in the record at pages 385-387. The translation of this patent used in the prior litigation and introduced by defendants herein is printed in the record at pages 331-333. Defendants later introduced another translation printed in the Record at pages 388, 389.

The patent shows on its face that it relates to the sizing and finishing of textile fabrics, paper coating and the like, instead of the wood glue. The defendants have translated the title of the patent as "New industrial process for the manufacture of starch glues and their applications." The French word which they have translated as "glue" is the French word "colle." The word "colle" means glue only in the broad and general sense of an adhesive. It includes the thin weak sizing adhesives, pastes, etc. If Dornemann had intended to make a strong glue or wood glue or would have used the term "colle forte," which is used when one wants to distinguish the product as strong glue (Rec., 376, 377).

Dornemann says he takes potato, cassava or other starch, suspends it in water and adds either a chlorid or an alkali to bring out the agglutmant, i. e., make the final glue. He says (Rec., 388):

> "* * * according to the kind of fecula (starch) to be treated, but in *similar* ways and for the sake of obtaining the *same* above mentioned *result,* I use either a chlorid (preferably of calcium or magnesium) in the proportion of about 80 kilograms to 100 kg. of fecula, or an alkali (preferably caustic) potassium or sodium in a proportion of 20 to 30 kg. for every 100 kg. of fecula used." (Italics ours.)

Dornemann does not mention any specific amount of water, but the amount used he says must be such as will produce substantially the same result with the chlorid as with the caustic. Therefore, to determine the amount of water contemplated by Dorne-

mann, Dr. Grosvenor made tests to see what range of water quantities would give substantially identical results with chlorid and caustic as the reagents (Rec., 374, 375). He started out with five parts of water and, using the chlorid, obtained a very thick jelly which would not flow at all, something unfit for both sizing and wood joining. Then he tried the same proportion of water but with the caustic instead of the chlorid, and obtained a thin liquid. These two products were totally dissimilar. Dr. Grosvenor next tried twenty parts of water and found with that proportion that the two products came out substantially identical. Both were thin liquid sizes such as would be used in the sizing industry to finish and stiffen fabrics or to bind together the inert material in the coating of paper. It must, therefore, be concluded that Dornemann contemplated using well over five parts of water and approximately twenty parts of water, as was then common in the sizing and finishing art.

That Dornemann contemplated a liquid size is also shown by the fact that calcium or magnesium chlorid (which he alternatively uses) takes up water from the air (is hygroscopic), a quality useful and often required in cloth finishing (Rec., 375), but fatal in a wood glue.

Another part of the patent also shows that Dornemann only contemplated a thin liquid and relatively weak adhesive containing a large amount of water. He says (Rec., 389):

> "For certain applications, lastly, for which a glue having more body or consistence may be desired, I further expect to add, to the amount of 10 to 30 per cent., some inert substance, as barium sulphate, kaolin, sodium or potassium silicate, etc., which has no chemical action and does not alter the processes I have described for the manufacture of the glue (colle) itself."

In other words, his original adhesive is so thin that it is possible to add from 10 to 30 per cent. of such inert substance and still have a glue-like consistency. If it were already a heavy, viscous glue like defendants' or Perkins'

(i. e., 3 parts or less of water), there would be no need to add anything to give it more body or greater consistency, and **if such an amount of inert material were added it would be useless for any purpose.** However, by using in the neighborhood of twenty parts of water, it is quite possible to add this quantity of inert material and still obtain a good sizing product but something wholly useless for wood work (Rec., 375).

Dornemann further says that he prefers to construct his machinery so as to avoid "all throwing out" of the glue. A thin watery liquid would be likely to throw out, but the heavy viscous semi-fluid glues of Perkins and defendants could not throw out. It would be absurd to speak of them in that way. Dornemann, therefore, contemplated only a thin adhesive containing something like **twenty parts of water,** which would likely throw out (Rec., 376).

Dornemann also says his final glue (adhesive) is "allowed to stand—and occasionally skimmed if advisable." He contemplated allowing it to stand in order that dirt or the like may rise to the top and be skimmed off. If his adhesive was heavy like Perkins' and defendants' glues, nothing in it would rise or settle and it could not be skimmed in any event. This shows again that Dornemann contemplated only such a large proportion of water as would produce such a thin adhesive that dirt or the like could rise therein and be skimmed off (Rec., 376). He says his product

> "may be used under the same conditions as all known adhesives, glues and sizes, producing much more energetic and durable effects."

By the word "glues" ("colles") he obviously means finishing and paper coating or like glues or adhesives. As we have seen, his whole specification is addressed to that art and not to the wood gluing art.

Defendants' expert, Dr. Walker, says that with Dornemann "any type of starch can be used" and Dornemann **"does not state the amount of water"** but **allows** the oper-

ator to use that amount of water which gives the consistency of glue to satisfy the purpose for which it is intended (Rec., 381). On the theory that he is permitted to use with such starch, proportions **first suggested by Perkins,** Dr. Walker made up glue, being careful to use therewith only 3 parts of water (Rec., 381) and he calls this Dornemann glue. **This proportion Dr. Walker admits is not specified by Dornemann and is necessary in veneering.**

This glue which Dr. Walker made up and called Dornemann glue, he said he used to glue up some panels which were satisfactory (Rec., 381). Why shouldn't they be? It was not Dornemann sizing glue that he made. He adopted Perkins proportions and was using Perkins glue. Such procedure neither anticipates Perkins nor justifies defendants' acts (Ludwigs vs. Payson and The Aspirin Case, supra).

If, as contended by defendant, the Dornemann patent discloses a starch glue with 3 parts or less of water and having the essential properties of animal veneering glue, like defendants' glue and as claimed in the product claims in suit, then, **in that event, the product claims in suit are invalid,** and all the Courts. which have considered the patent, have erred in holding them valid. And if the Court can find that the Dornemann patent, or any other prior art, sufficiently discloses such product, we believe it to be the duty of the Court to declare the product claims in suit, invalid.

Higgins U. S. Patent 579,827 (Record, 256) (and British 12,447 of 1896).

According to Higgins he takes from four to seven pounds of corn starch, and adds it to one gallon of acidulated water containing 7.87 per cent. (by weight) of sulphuric acid, mixed with about two per cent. of boracic acid, heated to a temperature preferably of about 145 degrees Fahrenheit before the starch is added, although that is not stated as

necessary. The starch is thoroughly mixed with this solution and the temperature raised more or less evenly, but rapidly to between 190 degrees Fahrenheit and 200 degrees Fahrenheit. The mixture is then held at that temperature for the desired time, as indicated by description of the qualities of the product in the patent, and it is neutralized partly with caustic soda and partly with ammonia, and allowed to cool, forming a "soft or firm paste."

Plaintiff's expert, Dr. Grosvenor, actually carried out the process many times (Rec., 212). The adhesive paste produced block joint strengths of only 500 to 600 pounds per square inch, about one-third of what Perkins and defendants' glue produce and less than half the required strength for veneer glue (Rec., 213).

Higgins heats to a high temperature with acid so that the starch is largely dextrinized and its strong adhesive properties destroyed, although it makes a good paste for paper, photo mounting, etc. (Rec., 214).

The Higgins patent appeared in 1897, 10 years before Perkins invention, and if Higgins disclosed how to make a veneer glue from starch, the veneer industry would not have waited all that time before using it.

Defendant's counsel admit (p. 13 of their Brief) that Higgins carried the conversion of the starch further than is contemplated by Perkins and produced only one of the "weaker adhesives," so that it seems unnecessary to further discuss the proofs with regard to the inadequacy of Higgins.

Brueder German Patent 114,978 (Rec., 295) (and U. S. 646,724).

According to Brueder starch is mixed with an equal weight of sodium hypochlorite solution, containing 2½ per cent. to 5 per cent. of hypochlorite. The mass is then stirred and left to itself for several (say 12) hours. The liquid is decanted and the residue dried between 50 and 100 degrees centigrade. Two to five parts of hot water

are then added to one of dried residue to make the adhesive.

In the preliminary treatment the starch is degenerated to what is termed **soluble** starch (Rec., 217). Soluble starch is one which has been degenerated almost to dextrin and so far that it has lost its tenacious adhesive qualities no matter what proportion of water is used with it.

Defendants' expert admits that by this process the starch base is far more degenerated than Perkins (Rec., 193). The product was never intended for use or usable as a veneer glue but only for sizing and similar uses where only a very weak adhesive is required (Rec., 215, 216). Dr. Grosvenor tried the process in various proportions within the limits given and obtained an average breaking strength on the block joint test of only 730 pounds per square inch less than half that of Perkins and defendants' veneer glue. The dried films of the Brueder adhesive were entirely too contractile, so much so that in some of block joint tests the blocks jumped apart without any pulling whatsoever (Rec., 216). The Brueder product is entirely different from the Perkins and defendants and useless for furniture veneer glue, because wholly insufficient in cohesive and adhesive strength combined, too contractile on drying, causing warping and twisting which tend to break up the joints (this is characteristic when an over-degenerated base is used), also because its penetration is so excessive and irregular that it would be impossible to use it under practical conditions, because its flow is uncertain, the material being apt to gelatinize and stop its own flow, and because of its tendency not to reliquify on heating and its being impractical to spread for these reasons.

Also Brueder does not advise that the base is to be dissolved with caustic soda or equivalent alkali.

Gerard Belgian Patent 34,869 of 1879 (Rec., 383, 384), and British Patent 38 of 1875, Encyclopedia Roret (Rec., 273) and German Hand Book by Schmidt (Rec., 390-392).

The Roret Publication and British patent describe another very old (1875) formula called "apparatine" for making an adhesive for finishing textiles and the like.

The process consists in dissolving 16 parts of potato starch in 76 parts of water and 8 parts of caustic soda solution of strength marking 25° Baume (Rec., 194). Therefore the resultant adhesive contains **over 5 parts** of water to 1 of starch base (Rec., 219).

The only point which defendants' expert Miner makes of this publication is that the appearances of the solution as it comes across are much the same as in forming the solution of Perkins glue, in that the milky mixture of suspended starch in water clears up and finally becomes transparent as does Perkins (Rec., 194, 195). **Defendants' expert Miner did not attempt to say that it has those properties of animal glue which are necessary for veneering.** Plaintiff's expert Dr. Grosvenor testified (Rec., 220):

> "The **amount of water is grossly excessive** and the hydrolysis resulting from caustic in the presence of considerable water makes the joint strength too low. Although it is an excellent size, it is worthless as a veneer glue."

The Belgian patent discloses the same "Apparatine" formula which is disclosed in the Roret French and German Handbook publications.

The title says it is "**A new composition for sizing fabrics.**"

Gerard says "any starches, feculas, meals, pulps of tubers and roots" may be used (Rec., 383). These are all good for sizing, but meals or most of them, are not adapted for veneer glue. He gives a formula, using potato starch, with

slightly **over 5 parts** of water to one of starch (some water goes in with the caustic) (Rec., 371).

He says these proportions may be varied (Rec., 383)

> "but in order to obtain an industrial and commercial product **it is necessary not to depart too much from" these "proportions which experience has caused me to recognize as best."**

This warning at the outset, leads one away from Perkins' discovery as to what happens with about three parts or less of water. Gerard says that the quality of the product improves as the energy of the stirring increases. The stirring causes it to become a relatively thin liquid. Stirring greatly improves this product for sizing purposes but it would make it worthless for veneering. Indeed, it could not be practically used for veneering whether or not it was given this stirring, because it would contain so much water that it would delay drying, and warp the wood in many cases, and produce relatively weak joints (Rec., 219).

Gerard says his product is viscous and ropy. But these are vague terms. Of course, since it is made up with only five parts of water, it is viscous and ropy as compared with the more dilute 20 to 1 solutions more commonly used for sizing (like Gerson & Sachse and Dornemann), but this is quite different from saying that it had the semi-fluid viscosity and other characteristics of Perkins' and defendants' glues.

Defendants made much of the statement in their translation of the Gerard patent that his apparatine is

> "of considerable adhesive power only to be compared to that of joiners' glue" (colle forte).

The Gerard patent does not use the term "joiners," it uses the term "colle forte," which means literally "strong glue." Strong glues, i. e., certain grades of animal glues, were used in sizing when mixed up with a relatively large amount of water. Gerard obviously had in mind merely

animal glue with a large amount of water to make it sufficiently dilute for sizing purposes. The statement, we believe, can only mean that his apparatine was different from starch sizing products on the market before that time (1874) and that it more nearly resembled animal glue in its sizing adhesive properties than the prior starch sizing adhesives. Gerard does not say that the adhesive power of his apparatine is equal to that of animal glue, but only that it had considerable adhesive power more nearly comparable with that of animal sizing glue than that of the prior starch sizing adhesives (Rec., 371, 372). Even this statement was apparently too strong, because when eight years later the apparatine was described in the chemical hand book (Rec., 392), this statement was omitted. Other later publications also fail to attribute any such characteristic to Gerard's apparatine.

Dr. Grosvenor points out (Rec., 372, 373) that the apparatine is not suitable for wood gluing and **lacks the essential qualities of animal glue for furniture veneering,** and is radically different from the product of the patent in suit, and from defendants' process and product.

Nearly fifty years have elapsed since Gerard first put apparatine on the market, and his patent was not a hidden publication first brought to light in this litigation. His adhesive had been noted and listed in reference books of the trade without teaching the art anything about starch *veneer* glue. If it had the properties of *animal glue for veneering* the trade would have used it for that purpose instead of the much more expensive animal glue. Defendants have not been able to cite a single use of apparatine for veneering or any other kind of wood gluing.

Gerard's product does not contain the requisite small amount of water (about three parts or less to one of starch). It does not have the viscous semi-fluid characteristic of Perkins' and defendants', it does not have the peculiar degree of penetration required for wood joint work, and it does not have substantially the properties of animal glue for wood veneering. The product claims 28, 30 and 31,

clearly distinguish both Perkins and defendants therefrom in these respects.

Defendants' expert, Dr. Walker, says he made up glue in the way described by Gerard, but **instead of using Gerard's 5 to 1 proportion of water he followed Perkins and used 125 parts of water to 50 parts of starch which is 2½ to 1** (Rec., 379).

Dr. Walker admits that he departed from Gerard (Rec., 379), because he (Dr. Walker)

> "intended to use the glue thus made in setting up veneers, and as already pointed out, **the veneering industry would not tolerate as much water as is here stated**" in Gerard.

Dr. Walker says he applied this glue to veneers and it was satisfactory. Of course it was; but it was not Gerard's glue at all but was Perkins' glue, made according to Perkins' formula and not Gerard's. Dr. Walker also says he made up glue with 5 parts of water and used it to glue up panels which "seemed" satisfactory but he never tested the actual strength of joint produced (Rec., 380). When he tried out any of the glue in a regular veneering factory he used the less proportion of water (Rec., 379), i. e., about 2½ parts. The reason is perfectly obvious.

Regarding the German Handbook, defendants have endeavored to make some point of the fact that the apparatine recipe is also contained in a book, entitled "Chemco-Technical Pocket Manual of Receipts for the Entire Wood Industry" (Rec., 373, 374). They would like to have the Court believe that, therefore, it was recognized that apparatine was suitable for gluing up wood.

There is nothing persuasive about this formula appearing in a recipe book for the wood industry, because, as the book shows on its title page and in the preface, it covers wood impregnating (sizing), dyeing, etc. Wood is sized or impregnated with a thin watery glue in order to fill up the pores before painting or otherwise coating it. That such

was one of the intended purposes of the recipe in this Chemico-Technical Recipe Book is shown by the footnote on page 62 of the book (Rec., 392), which explains that C. Puscher as early as ten years prior to 1882 recommended a **similar material** as **a high gloss sizing.** The apparatine may also have been intended to be used in the wood industry as a binder for colors applied to wood, because the book says, after explaining that it may be used for sizing fabrics, that "it may also be applied as a binder for dyes" (Rec., 374).

The title page of the book shows that it also covers toy-making in which paper or cardboard is frequently stuck to wood.

The fact that this apparatine was never used for gluing together pieces of wood as in veneering (Rec., 374), and that defendants cannot now so use it and that, when Perkins' discovery was announced, the veneering art was revolutionized thereby (the change from animal to vegetable glue), should be controlling.

Marsden U. S. Patent 376,445 (1888) (Rec., 254).

Marsden states in his patent that his invention relates to "adhesive paste" such as is "commonly made by boiling flour or starch and water." He says his product is for wall paper, labels, bookbinding, and for shoemaker's use, and generally for all uses to which ordinary flour paste is put. He uses caustic alkali with the starch but also adds a chemical to neutralize the caustic which prevents the caustic from acting on the starch in the way that it otherwise would.

The only indication which Marsden gives as to proportion of water is (Rec., 255, line 38) that

> "a given quantity of the powder will make about eight times its own volume of paste,"

the powder being the starch or flour with the small percentage of chemicals added thereto.

This can only mean that **he uses about 7 parts of water** to one of flour or starch base.

It is true that Marsden suggests that the paste may be thinned by the addition of water or thickened by the addition of more of the alkali and flour, but this obviously only means such changes in proportions as may be required to get the desired consistency without materially changing the nature or character of the paste and without changing its suitability for the stated uses, wall paper, labels and the like. If it were made up in any such proportions as two or three parts of water to one of starch, it would be absolutely unusable for wall paper or labels.

There were a large number of other prior patents introduced in evidence, but they add nothing material to the foregoing and are even more remote.

For the purpose of enabling the Court to better visualize the prior art and the main distinctions between the prior art processes and products on the one hand and those of Perkins and defendant on the other hand, we have appended a chart at the end of this brief, on which chart defendant's process and Perkins' preferred process are schematically illustrated beside the principle prior art processes above discussed.

The New Perkins Glue Was Not Obvious from the Prior Art.

From the foregoing it will be seen that it was common to make cloth finishing and sizing adhesives by dissolving the ordinary starch of the day (and also starch degenerated like Perkins), in from 5 to 20 parts of water with caustic.

Brueder "desired" to use less water in order that he might inject more starch into the fabric by the use of a given amount of size, but he was unable to do so with the ordinary or raw starch of the day and so suggested the use of "*soluble*" starch with from 2 to 5 parts of water *without*

caustic. Others also suggested the use of soluble starch. The record shows it has been impossible to make a veneer glue out of *soluble* starch because it has already lost the necessary tenacious adhesive properties by reason of the treatment thereof necessary to make it soluble starch.

There is also the third class, i. e., the pastes such as Higgins, in which from 1 to 7 parts of water were used, but they were made by bursting the starch grains in *acid* with heat, producing a thin weakly adhesive *dextrin* serum having commingled therein the outer undissolved fragments of the starch pellicle which if applied to wood only act to make the paste weak in its adhesive properties.

The prior art adhesives made from starch were suitable only for sizing fabrics, sticking paper and the like; none had the adhesiveness and properties of animal glue for furniture veneering or the like.

These prior art starch adhesives had been known for generations before Perkins' discovery and if it were obvious from the prior art that a furniture veneer glue could be made from starch, it would certainly have been done before Perkins, because starch has always been one of the cheapest of raw materials and the cost of animal glue for veneering created a long felt want for something cheaper.

There is nothing in the prior art to suggest that if one took a starch not degenerated to soluble starch or dextrin and used with this starch the critically small amount of water (about 3 parts or less) a furniture veneer glue could be produced. The prior art shows that those skilled in the art had always understood that if they used a starch not degenerated to soluble starch or dextrin (either before or during the making of the adhesive) then they would have to use five parts or more of water to get any kind of a useful adhesive, and if they wanted to use less water they would have to use a starch degenerated to soluble starch or dextrin (either before or during the making of the adhesive). Therefore there was no reason to suppose that any of the multitudinous combinations of different kinds of starch, with different amounts of water, with different kinds

and amounts of chemicals and with different conditions of treatment, would produce a glue having the adhesiveness and properties of animal veneering glue. The difference in the proportion of water was not a mere difference of degree so far as the resulting final glue product was concerned. Perkins was the **first to discover that the high sticking power for wood really existed in starch** and that such a glue could be made from starch when about 3 parts or less of water is used. Prior to Perkins nothing of that kind had been obtained from starch, in spite of the fact that many skilled inventors had been working on starch adhesives for generations.

Once discovered the secret of success seems very simple, and one wonders why someone did not before unearth it. But there was no reason why one should expect to obtain any such strong wood glue from starch because according to the prior art only relatively weak adhesives had been made therefrom. It was Perkins who first disclosed to the world that such a thing was *possible,* and he achieved the result by using the critically small amount of water (about 3 parts or less) with a starch which had not been degenerated to soluble starch or dextrin, being at the same time careful to avoid in the dissolving step, chemicals, such as acids, which dextrinize the resultant adhesive and so destroy the desired adhesive strength for wood veneers.

Perkins' Glue Has Revolutionized the Veneering Industry.

The Perkins invention has revolutionized the art of furniture veneering. In the sense that Perkins was the first to produce an all around veneering glue from starch he was a pioneer. Whereas before Perkins animal glue was the glue used in this industry, approximately 90% of the concerns which formerly used animal glue for veneering now use this vegetable glue (Rec., 82). The Perkins Company alone supplies over 300 concerns with it and during five years shipped out **yearly about 9 million pounds of starch base** to be made up into this glue (about 45 million pounds all

told), which made a saving for the users of about **nine and one-half million dollars**, over what it would have cost them if they had used animal glue at the prevailing prices (Rec., 81, 82).

The comments of the Trade Publications in the earlier years show that the Perkins glue was received as a new and revolutionary thing (Rec., 789 to 805).

We submit that the echo from the trade and their faithful adoption of the glue is a better guide for a court to follow than the testimony of a hired expert paid to read into prior art patents the teachings of a subsequent invention.

The Solva Co. Litigation.

Suit for infringement was brought in 1913 against the Solva Waterproof Glue Co., the Birch-Kane Co., Lowell R. Burch and Thomas B. Kane in the U. S. District Court for the Northern District of Illinois.

It appears that Burch and Kane, who controlled the Solva Co. and the Burch-Kane Co., were formerly in the animal glue business and finding that Perkins had invented a competitive substitute which was likely to seriously cut into their business, they, through their associate, one Morron, endeavored to get Mr. Perkins to take them into his vegetable glue business in 1908. Mr. Kane (who, by the way, is at the head of the Kane Mfg. Co., which has supplied the defendant here with most of its starch base and *is backing the defendant here*) went to Florida under an assumed name to try and find out the Perkins' process. Failing in this and failing to get into the business with Mr. Perkins, Burch and Kane organized the Solva Co. to make a competitive starch base and they organized the Burch-Kane Co. to act as selling agent therefor. Meeting with serious difficulties in producing the required glue, they endeavored to hire away Perkins' chemist and glue man Warren. They failed in this at first but in 1911 they succeeded in getting him into their employ. He

told them all the details of Perkins' invention, including the fact that certain raw cassava could be used without the first step treatment, and from that time on they had no difficulty.

Some of the starch base which the Solva Co. put out to be made up into this glue by the furniture or panel concerns, was a cassava starch which they had treated with chemicals substantially like Perkins. Most of the starch base which the Solva Co. put out, however, was not so treated and was not given any preliminary degeneration treatment. **It was so-called raw cassava starch just as found on the market, except they sieved it to remove dirt, etc., before shipping it to the furniture factories or panel makers.** (See p. 78, infra.) Since some of the infringing glue in the Solva Case was made by the Perkins two-step process, plaintiff, Perkins Co., relied upon claims of each group, to wit:

(1) Process claims limited to both steps of the Perkins preferred process, e. g.: claim 20.

(2) Process claims covering merely the second step or dissolving step, e. g.: claim 11.

(3) A claim covering merely the first step of the preferred process, i. e.: claim 16.

(4) A claim covering merely the glue base as an intermediate product, i. e.: claim 20.

(5) Claims covering the final or ultimate semi-fluid glue, e. g., claims 28, 30 and 31 which are in issue here.

Since the defendants Solva Co., et al., were not dissolving their starch base to make the final glue (this being done by their customers, the furniture or panel factories) the Solva Co. did not directly infringe the final glue product claims, nor the second or dissolving step claims, nor the two step claims, but **contributed to** ***infringement thereof.*** Also, apparently, they could not be held to have infringed the first step claims and two step process claims with respect to that portion of the glue which was made from cassava starch without giving it any first step or preliminary

treatment. Plaintiff, at the trial, therefore, laid particular stress on the alleged infringement of the glue *base* product claim 24 and the first step process claim.

In this Solva suit plaintiff, Perkins Co., also charged infringement of a subsidiary patent 1,020,656 having limited claims for carrying out the preliminary treatment or first step with certain alkaline chemicals and much of the case turned on the question of validity and infringement of the *process* claims therein.

Judge Sanborn's Decision at Final Hearing in the Solva Case (223 Fed., 792).

Judge Sanborn after pointing out that the patents relate not only to the process but "also to the glue itself," quotes from the description of the two step process as given in the patent 1,020,656 (not in suit here). The defendants in the Solva case were using a first step alkali process like that claimed in the second patent 1,020,656 instead of the first step acid process described in the reissue patent 13,436 in suit. Most of the Solva glue base, however, was a brand of raw starch just as it came on the market and was **not treated by any first step** chemical treatment to degenerate it before it was dissolved in the small amount of water with caustic to make the glue.

After quoting two of the two step process claims of the second patent, 1,020,656, Judge Sanborn said:

> "It is claimed for Perkins that *he was the first to produce wood glue from starch which could be used in the wood veneer art with results equal to animal glue,* and that he was able to get this result only after the most extended and patient experiment for a number of years. It is conceded that starch sizes and pastes had been produced by others, but it is said he was the first to discover the suitable proportion and co-ordination of the variable factors of the two successive steps; the first a slow and partial starch-degenerating step, and the

second an alkaline dissolving step, so regulated as to make the product like good animal glue of the proper viscosity to be spread by machinery over a large surface, and of suitable cohesiveness in itself and adhesiveness to the wood, and possessing penetration and holding power, as well as being moisture-proof and not affected by heat or drought. It is also classed that substantially all the prior art was considered by the Patent Office on Perkins' application, and that he was granted a German patent after strenuous opposition, and upon a full hearing, accompanied by actual experiments and tests." (Italics ours.)

Here Judge Sanborn particularizes with respect to the process, referring to the "co-ordination of the variable factors of the two successive steps." **He was not saying or implying that the final glue product claims covered the glue only when made by the two steps for, indeed, he later holds as new and an infringement, glue made by a single step** (the second or dissolving step).

Judge Sanborn further says in his opinion in the Solva case:

> "Defendants do not make, use, or sell the Perkins glue as it is after the second step, ready to apply to the wood veneers. They only make the Perkins glue base, and sell it to wood veneer manufacturers, who are equipped with the tanks, pipes, rolls, and other machinery used for spreading the product. If they do not infringe, therefore, by producing the base, they can be held as infringers only if the facts justify a finding of contributory infringement."

Referring to the Solva Company's position with respect to the glue *base* claim there in suit, Judge Sanborn said:

> "In order further to get the full force of defendants' position (so far as may be without giving the full argument), it should be said Perkins merely occupied a particular part of a prediscovered field. The important question was how far the starch should be *degenerated* in the first step of the process. Defendants' counsel say:

'The two extremes were the untreated starch insoluble in water at one end of the line, and at the other end the dextrinized product soluble in cold water. Between these two extremes lay a range or a field of varying degrees of degeneration. But this intermediate field had already been discovered, entered, and described by many inventors, including Virneisel, Kantorwicz, Brueder, etc. All of these inventors had expressly described as preferred that degree of degeneration just short of solubility in cold water, as we will later on more particularly show. Therefore, when Perkins apeared upon the scene, nothing remained that he could possibly do excepting to select some other specific degree within this field or range. Inevitably his invention, if any, must be one of simply narrowing or limitation, and it is from this standpoint that all the questions in the case must be viewed, including questions as to new matter introduced after the original applications were filed, and particularly after the death of Mr. Perkins.'"

This all applies to the glue *base* invention and was defendants' argument in the Solva case for invalidity or non-infringement of the glue base claim and first step claims. The above argument of defendants has no application to the final glue product invention, and Judge Sanborn disposes of the alleged defense saying:

"It seems obvious that this contention would be perfectly sound if the Perkins patents related to a new form or process of an old product. But how is it to be regarded when applied to a new product?"

Judge Sanborn goes on to say:

"If an inventor finds a chemical substance (the starch base) devoted to a particular use, conceives the idea of applying it to a new purpose, and on experiment discovers that the substance must be treated in a particular way to suit his purpose, which method of treatment is essential to his end, but of less importance in obtaining the prior art results, it is apparent that he may be regarded as a real inventor, even though he

selects a specific treatment in an occupied field. If he were making only a paste as others had done, it might not be invention to select part of the old field of experiment, although he might thus produce an improved paste. But he discovers a novel and valuable use for the old product (dry starch base) which he modifies to suit the new purpose." (Parts in parenthesis ours.)

Here Judge Sanborn gives further reasons for sustaining claim 24 for the *base* and claim 16 for the *first step* process for making the base. The Solva Company was making only the base and selling that to furniture concerns and panel makers to make into glue by the Perkins' second step. The defendants Solva Company, et al., were not making the final fluid glue. Hence they thought, by showing that they did not infringe the glue base and first step or glue base process Claims 24 and 16, they could perhaps escape infringement altogether. Therefore, the case centered largely around the novelty of the base and process of making the base.

After citing certain cases to support his holding of validity of the glue base and glue base process Claims 24 and 16, Judge Sanborn says:

> **"The patents are meritorious and valuable inventions,** *and have been successful.* They should not be narrowly construed, but treated as a distinct advance in the art, achieved only by long and exhausting trials. I think they should be sustained."

Discussing the question of contributory infringement by the Solva Co., Judge Sanborn said:

> "The witness Hase testified that he demonstrated the Solva glue in 1913 and 1914 in practically the same way the Perkins glue was used in the plant of the St. Louis Basket & Box Company, where he had been foreman. This is the second step of the process. On January 5, 1912, the Solva Company wrote to Gorham Bros. thus:
>
> 'For some time we have been trying to interest you in our Solva glue, and due to the fact that we are to-

> day making glue identically as that which you are getting from the Perkins Glue Company—in other words, we have in our employ the glue maker and chemist who were with the Perkins Company for 11 years past—we can furnish the same glue as what you are using.' * * *
>
> 'This glue you can use at the rate of 2½ or 2¾ pounds of water to one pound of glue, caustic to be used 7 per cent. to the cold mixture and 3 per cent. with heat. Some of the trade are using the 3 per cent. mixture, which avoids the staining of wood.' "

It will be noted here that the term "glue" is used to mean the "base." This occurs in many instances in the record and decisions, and has led to much confusion.

Referring to the glue which was made **without any first step** or preliminary treatment, and like defendants' glue in the case at bar, Judge Sanborn said:

> **"It often happens that cassava glue base can be used without any processing by the first step, in which case it is tested and sent to customers in its original state. Infringement clearly appears."**

This last paragraph refers to the most of the Solva glue base which was not treated by any degeneration process but was raw cassava starch G T A 46 Brand just as it came on the market. **There was no evidence that it came within the so-called 9 to 1 boil up test or the 170° hot water test specified in the Perkins patent.** It was simply tested by applying the second step of the patent to see if it would make the good as animal glue for veneering, and it did, and was accordingly sent to their customers to make glue out of by dissolving with the small amount of water and caustic and this Judge Sanborn disposed of in the three words: "Infringement clearly appears."

Judge Sanborn concluded his opinion as follows:

> "I have carefully considered the defense of prior use, and am fully satisfied from the evidence that Perkins never perfected his invention until the spring of 1907;

his applications having been filed November 2, 1908. All his practice up to about the earlier date was experimental.

As to the amendments to the specifications in the Patent Office, I think they were not new matter, but only in the line of making the real invention clearer.

There should be a decree adjudging infringement of claims 13, 16, 19, 24, 28 and 38 of the acid patent, and 2, 6, 7 and 9 of the alkali patent, and for an accounting, as prayed, and injunction, with costs."

For some unknown reason Judge Sanborn did not pass on all the claims which were relied upon by plaintiff, but he selected certain claims from each group.

Judge Sanborn, while assuming that Perkins base was old for making sizes and that his first step was also old for making such a base, held the base claims and glue base process or first step claims patentable on the ground that Perkins applied these old features to a new use. Judge Sanborn said it is claimed that

> "even if his (Perkins) glue base is substantially the same as that of Virneisel * * * he applied it to a new use of great utility by producing a cheaper adhesive, as good as animal or hide glue, less objectionable as to odor and in other respects."

It was this holding of validity of the first-step process claims and glue-base product claims to which the 7th C. C. A. in the Solva case took particular exception, as we shall presently point out.

The Court of Appeals in the Solva case nowhere stated that Judge Sanborn was reversed as to his holding that the good as animal glue made from *untreated or raw* cassava starch was an infringement of the final glue product claims such as 28, 30 and 31.

Opinion of Circuit Court of Appeals in Solva Suit, with Comments (251 Fed., 64).

The later litigation has turned largely upon the interpretation to be given this decision of the C. C. A., 7th. Its ob-

security has been commented upon by the Courts in later cases. **To discover its true meaning** we believe **it must be carefully studied** in connection with the evidence introduced in the Solva case.

We give lengthy consideration to this decision because defendants have always contended that it supported their view and that by reason thereof and the proceedings which followed, plaintiff is estopped to contend for the broad interpretation of the patent which the Court below has given to it.

In interpreting this C. A. A. opinion in the Solva suit, one should bear in mind that **the final holding of the Court was that these product claims to the Perkins final starch glue were sustained** as well as certain process claims for making it. The larger portion of the Court's opinion, is directed to and is a discussion of its reasons for reversing Judge Sanborn's finding valid the claims covering the dry starch *base* as a product *per se* and the claims for the *process* of making that base *per se*. The terms "adhesives" and "glues" were frequently applied to such dry starch bases, and therefore care must be taken not to confuse statements in which these terms are so used to mean the base, as statements regarding the finished fluid adhesives or final glue.

The opinion states:

> "The gist of appellee's contention as stated by counsel is that Perkins discovered that there is a point of degeneration of starch at which, when degenerated to that degree, the starch is treated to not to exceed three parts of water and a solvent, there is produced veneering glue as good as or better than animal glue, and that appellants have appropriated that discovery and the application of it."

The Court correctly states plaintiff's contention as to the *process* claims there involved. We submit, this does not refer to the final glue product claims here in suit. Defendant's counsel at page 29 of their Brief, have taken this statement in respect of Perkins process invention and

twisted it in a manner to imply that it limits the final glue **product** claims.

It should be noted, however, that the doings of defendants in the case at bar here, fall squarely within this definition. Their starch base is one "degenerated to that degree" at which when "treated to not to exceed three parts of water and a solvent, there is produced veneering glue as good as or better than animal glue."

Then after summarizing the defenses in the Solva Case, the C. C. A. there disposed of the new matter defense holding that the added matters were not such as to invalidate.

The opinion next says:

> "For some time prior to Perkins' alleged invention, it was old to form adhesives by dissolving starch in different degrees of fluidity and strength, according to the use it was sought to put them to, as substitutes for animal glue."

The Court is here obviously referring to the use of starch substitutes for animal glue in the *sizing* and other industries where no strong joint (such as a wood joint) was required, because prior to Perkins no starch glue had been used for furniture veneering.

The opinion proceeds:

> "The increasing scarcity of animal substances which had theretofore been adequate and the consequent growing cost thereof stimulated this development in the art, and the result was a number of patents purporting to cover adhesives of every degree of strength and for every purpose, made from starch or starchy substances."

The Court is merely pointing out the fact that there had been a more or less general substitution of starch adhesives for animal glue in various arts, such as in mucilages, sizes and pastes. This more fully appears from a further consideration of the Court's opinion. The Court also, in using the phrase "adhesives of every degree of strength," etc., ap-

parently means merely the dry starch bases which the prior art showed had been degenerated to many different degrees (frequently called differences in strength) in the sizing and mucilage arts. The statements should not be interpreted in a way inconsistent with the ultimate finding of the Court that a product which could be substituted for animal glue in veneering was not found in this great mass of prior art. They said the prior patents were only in search of weaker adhesives.

The opinion proceeds:

> "It was also an established and well known fact years prior to the patents in suit that raw, under-treated starch was not suitable for the manufacture of the better grades of adhesives, such as glue: and also that all grades of adhesives could be obtained from starch somewhere between raw starch and over-treated starch, just as they could be obtained from animal matter."

This again is a mere generalization. It is true that many of the sizing adhesives and mucilage and some pastes were made with degenerated starch, but the treatment to obtain different kinds of adhesives from starch was quite different from the treatment required to obtain different grades of animal glue.

The different starch adhesives were obtained largely by using different starches degenerated to different degrees so that the statement that "all grades of adhesives could be obtained from starch somewhere between raw starch and over-treated starch" likewise refers to the different dry starch *bases* as the term "adhesives" was frequently so used and the Court is leading up to a holding that there was nothing new in the Perkins base.

The quoted statement, therefore, merely means, we submit, that there was a range of starch bases from some of which products had been made which were substitutes for animal glue as in sizing, and does not contradict the ultimate finding that the product here involved was first discovered

by Perkins and was patentable irrespective of any particular process.

The opinion proceeds (having in mind the claim to the glue base process or first step):

> "It is the theory of the patent that the starch grain and its enveloping pellicle are rendered less amenable to water absorptiveness by degeneration or treatment under the patent process, so that the fluent glue may result from the addition of a minimum of water, since the water must eventually be eliminated."

This again refers to the process invention. The opinion further says:

> "Resultants from treated starch and similar carbohydrates supply the whole gamut of adhesives from the strongest glue to dextrine and glucose according to the treatment applied and result desired. This was clearly set out in the prior art, though the record does not show that **the Perkins article was ever exactly produced prior to the glue in suit.**"

The reference to "the whole gamut of adhesives from the strongest glue to dextrine and glucose in according to the treatment applied and the result desired" is evidently the same sort of generalization as is found in the two preceding qutotations.

The Court then says:

> "Perkins experimented in the glue production from starch extensively. **His present claims, as above stated, are for a veneer glue as good or better than animal glue.**"

The Court next considered and dismissed the Poplar Bluff Public Use Defense. The amount of water there used (and which had to be used) was excessive and the glue did not have the penetration, adhesiveness and cohesiveness of animal glue for furniture veneering purposes, nor the necessary small amount of water, and so it did not anticipate.

"The object sought" may have been to secure "a glue that was as good as good animal glue" but this object was not there attained. A sufficiently "proper article" for barrel heads was sometimes there obtained "by experimentation" and "the result was satisfactory in that plant" eventually, but that was all. The statement that "the same glue is still in practically exclusive use there" is not borne out by the evidence unless it means that they still use excessive water.

The Court in discussing this alleged Poplar Bluff prior use says, however,

> "we apply the term glue above to the finished prepared article, ready for application,"

indicating clearly that previous to this discussion of the Poplar Bluff use and in the discussion of the prior art, the Court had used the term "glues" or "adhesives" to mean merely the dry *starch bases,* as we have already explained.

The Court next sums up the prior art situation by quoting passages from defendants' brief, which are **dangerously misleading** in the way they are put and in their implications unless the real prior art situation is understood and constantly borne in mind. The summary reads:

> " 'At the time Perkins entered this field it had long been old to form adhesives by dissolving the starch in a suitable aqueous solution, in different proportions of starch to solution, according to the use to which the adhesive was to be put. The starch solutions so formed were used in various relations as substitutes for animal glue, as in sizings and coatings of various kinds, as well as in the gluing together of bodies of wood and the like.' "

The last must refer to the Poplar Bluff use, as, so far as the evidence showed it was the only instance where a starch adhesive had been used for gluing together bodies of wood.

The Court goes on with the defendant's summary of the

prior art as follows (the different degrees of solubility, meaning different degrees of degeneration or water absorptiveness):

> "Starches as found upon the market then, as now, had different degrees of solubility, depending on the sources from which they were derived, *the processes by which they had been separated from the plant* and their subsequent treatment. Consequently when dissolved under the same conditions they would yield adhesives of different degrees of fluidity dependent upon the solubility of the starch. It was established commercial practice to treat the less soluble raw starches, which would not, without excessive water, yield sufficiently fluid solutions for the various purposes for which they were designed, with reagents to increase their solubility, after which they were dried and placed upon the market. The degree of solubility of the starch depended on its original condition and the extent to which the treatment was carried, and varied from the substantial insolubility of raw starch to the ready solubility of soluble dextrine or glucose. For some uses of such adhesive one degree of solubility was desirable, and for other uses, another." (Italics ours.)

This again is a mere generalized statement with respect to starch bases. It does not state that any one prior to Perkins had originated and pointed out a vegetable glue as good as animal glue for veneering. It is not in the slightest degree inconsistent with the holding that the Perkins glue was new and patentable irrespective of the process or base used. The summary proceeds:

> "Thus, where a very thin, penetrating, easily absorbed coating, readily soluble in cold water, was desired, as, for example, for envelopes, postage stamps and the like, glucose or soluble dextrine was best."

The prior art sizings all strove for great fludity, a fluidity which would be fatal for veneer glue. Perkins pointed out that for veneer glue the adhesive must be viscous and only semi-fluid so as to penetrate the porous wood only enough to

obtain a firm rootage in the pores, but not so far as to be substantially all absorbed in the wood.

The defendant's summary adopted by the Court continues:

> "For starches for certain laundry purposes and sizings, a material less soluble in cold water was advantageous. Different sizings demanded different degrees of solubility. By stopping the process of degeneration or modification of the starch at the proper point any required degree of fluidity within wide limits could be attained."

This is merely a statement that bases differing widely in solubility or degeneration could be attained.

The Court goes on with the defendants' summary saying:

> "It had long been known at the time Perkins entered the field that dextrine was a weaker adhesive than less fully treated starch, and that, therefore, to get a maximum strength of product, the treatment should not be carried to the point where dextrine, which is soluble at ordinary temperature, is formed."
>
> "Therefore when an adhesive with great strength was desired, care was taken to stop the treatment at a point where little or no dextrine had been formed in the batch."
>
> "Now, as before stated, it is desirable in all adhesives to obtain the necessary degree of fluidity with as little water as possible, since the latter must be eliminated by drying in setting the material. For this reason it was recognized as desirable to carry the process as far as possible without the formation of the objectionable dextrine, and thus secure a maximum fluidity without detriment to the strength and adhesive qualities of the material."

This refers only to the art of sizings but even in that art it is not strictly accurate. It is true that in the sizing industry there was, in some cases and for a different purpose, an endeavor to use starches of less water absorptive character (more degenerated), in order that more starch

material might be put into solution in a given amount of water so that when a given amount of solution was spread upon or injected into the fabric there would be a greater body of starch left therein. The small amount of water was desired for this purpose and not because of any difficulty in eliminating the water by drying or because of any difficulty in the setting of the material.

The defendants' summary continues:

> "Many different reagents can be and have been employed to effect this degeneration, and among them the very reagents employed by defendant. We find in a single prior art patent the preparation of the identical glue base or material by degenerating starch to the same point to which defendants' material is modified by the same reagents and by the same method."

This evidently refers to the Gerson & Sachse German Patent or Virneisel French Patent. Our belief and contention there was that the Gerson & Sachse and Virneisel base was, as a matter of fact, further degenerated than the Perkins base. The Court held against this contention, not by reason of any different understanding of the Gerson & Sachse and Virneisel base, but by reason of *a broader conception* of the Perkins base which was thus not patentable *per se.*

Referring to this Gerson & Sachse base the summary further says:

> "This material, as stated by the patent, was put upon the market in the same form that defendants' material is put upon the market and was sold, to be dissolved by the user in a solvent containing the same aqueous solution of the same reagent, of the same concentration as defendants' customers employ. The only difference between the process of this particular patent and the practice of defendant is in the use to which the glue material is put and the conseuqent **difference of dilution** of the solution thereof. The patentee refers to the use of his adhesive for dressing or finishing, i. e., sizing or stiffening fabrics, while defendant and its customers employ the material for sticking veneer layers together. **There-**

> **fore, the prior art patentee uses and describes a relatively dilute solution, while the defendant employs a relatively heavy solution,** just as the more familiar adhesive animal glue is used in dilute solution for sizing, etc., and in heavy solution as a glue for veneers, etc. **No other difference exists."**

By "same concentration" is obviously meant same concentration of caustic in water, not the amount of water relative to the amount of starch. The latter is referred, to as the "difference of dilution." The opinion here holds that Gerson & Sachse fail to disclose the use of about 3 parts or less of water to one part of starch (they disclosed the use of 20 parts). Although Gerson & Sachse fully disclosed the Perkins first step and base combined with a second step, they did not have in the resultant glue the critically small amount of water necessary to produce a glue having substantially the properties of animal glue for veneering which Perkins was the first to discover. The summary continues:

> "It is the defendants' view that this difference is an immaterial one, especially in view of the fact that similarly modified starch had been dissolved in aqueous solution in substantially the same proportion of starch to solvent, employed by defendant, to make a glue for the same purpose as that for which defendants' glue is employed, to wit, to glue wood together, and otherwise as a substitute for animal glue."

In this last sentence "proportion of starch to solvent" means proportion of starch to caustic soda, and the sentence obviously refers to the alleged Poplar Bluff prior use where a similar percentage of caustic solvent was used, but, again, in the Poplar Bluff use the amount of water was different and so excessive that no strong joint could be obtained. Indeed the evidence was to the effect that the veneer layers could readily be pulled apart with one's fingers.

The Court did not agree with "defendant's view" here expressed, that the difference between a sizing with a rela-

tively large amount of water and a wood glue with about three parts or less of water was immaterial, for **otherwise the Court must have held all the claims of the patent invalid.** It held the difference in the amount of water to be a material one because in the end it held the final glue product claims valid and infringed.

There is nothing in this summary of the prior art, however, tending to show that Perkins invention lay in the idea of using two steps to make the glue, or in the use of a base degenerated to respond to the so-called tests of the patent, but just the reverse. The summary finds **the two-step idea and the base old in Gerson & Sachse and Virneisel.** The substance of this summary of the prior art is that the making of a base like Perkins base by degenerating with chemicals like Perkins chemicals was old, and that it was also old to dissolve this base as well as other starch bases (both natural and degenerated to different degrees) in water with caustic soda, but the main difference between Perkins and this prior art was in the difference "in dilution," i. e., the difference in the amount of water in the glue which resulted in an entirely different product both chemically and physically.

The Court next says:

> "**In view of the fact that large quantities of starch in a normal state are in a more or less degenerated state,** some much below the degree required for the manufacture of the glue of the patents, it is not deemed possible to establish a fixed standard of treatment. Some starch must be fully treated, some partially, and some restored to a better grade. The former process is accomplished by the use of chemicals and the varying of the degree of application thereof, according to the quality of the starch. The over degenerated must be restored mainly by the intermixture thereof with more or less untreated starch—a matter of general average. There is no way of knowing what the condition of this starch to be used is, except that when experimented with it responds satisfactorily to tests furnished by the patentee, calculated to determine whether the proper degree of de-

> generation is attained. **The most satisfactory of these is to apply the second step of the patent, and if the result is the veneering glue of the patents, the operator has guessed right.** If the glue is not up to standard further treatment must be applied."

The Court here finds, as we contended, that large quantities of so-called raw cassava starch come on the market "in a more or less degenerated state" and that to determine if this is suitable for making Perkins glue without the preliminary degenerating treatment with chemicals the most satisfactory test "is to apply the second step of the patent" (with the small amount of water) "and if the result is the veneering glue of the patents, the operator has guessed right." We submit nothing could be clearer to the effect that **the Court intended to hold that the veneer glue so made from natural starch (without the first step) and irrespective of whether it responded to the other so-called tests of the patent, was within the patent,** as Judge Sanborn held it to be.

Because natural starch is so variable, the Court is leading up to the conclusion that the *process* of making the *base* is variable and therefore indefinite and not patentable. The Court says:

> "Nothng but experiment avails in the successful production of the glue base. If the patent were for the preparation of a proper glue base from entirely raw starch it may be the *processes* of the two patents in suit might be valid. As it is, we see no disclosures which entitled appellee to a patent for any of his claims for the manufacture of the glue *base*. It is a hit or miss formula, and not such a disclosure to those skilled in the starch glue or adhesive art as would enable them to practice its manufacture without experimentation. They may not be required to resort to experimentation. Panzl vs. Battle Island Paper Co., 138 Fed., 48, 53; 70 C. C. A., 474; General Electric vs. Hoskins Mfg. Co., 224 Fed., 464; 140 C. C. A., 150; Chemical Rubber Co. vs. Raymond Rubber Co., 71 Fed., 179, 182; 18 C. C. A., 31.

> **The patents in suit disclose no advance upon the prior art in the creation of a proper glue base.** That must be discovered anew on each occasion. For the same reason the glue **base process cannot be deemed an invention** or an original discovery, under the facts of this case."

If, as stated by the Court, and as is true, the patent disclosed no advance in the creation of a proper glue base or glue base process (first step), how can it be logically argued that according to this same Court's opinion, this same first step or this same base is essential to give patentability? If, as found by the Court, the base was old, the glue product claims certainly could not be made patentable by limiting them to the old base.

The Court says that since the starch base might be found in the market already in proper condition and requiring no processing or first step at all, the invention could not lie in the production of the glue base *per se*. The inevitable implication of this taken with the final holding that a *product* invention was present somewhere, is that it lay in the final starch glue as good as animal glue for veneering.

The Court evidently still having in mind the glue base and glue base process, takes up more specifically certain prior art patents, and referring to French patent to Virneisel, says:

> "It is thus apparent that Virneisel was aware that different strengths of adhesives would be obtained between raw starch and dextrine. The same is true of the Gerson & Sachse German edition of the Virneisel patent for a solid vegetable mucilage, which denominates the product of the patent as vegetable glue. The Trial Judge was of the opnion that the Gerson & Sachse glue base was degenerated to the same degree as the Perkins glue base. If so, of course, it would respond to less than three parts of water and an alkali."

The Court says, "it is thus apparent that Virneisel was aware that different strengths of adhesive would be obtained between raw starch and dextrine." This, of course, applies

to the base, i. e., the "solid" product and the term "adhesives" is used to designate the bases. By "different strengths of adhesives," the Court means starch bases of different degrees of solubility or degeneration, because raw starch and dextrine have different strengths only in that sense.

The Court next quotes various passages from the Higgins patent. The Court does not say it agrees with Higgins' laudatory statements. The Court does not find that Higgins in the slightest degree anticipates or limits the main Perkins invention, the good as animal glue for veneering. The Court refers to the fact that Higgins states that at one stage the product "has extraordinary adhesiveness, like glue, but the Court does not assume to find that Higgins accurately stated the facts or that it was like *animal veneering glue*. The proofs in the Solva case, and here, show beyond doubt that the Higgins' product was entirely different from Perkins (and defendant's here). Higgins' product was the common library paste. The fact that defendants' counsel in later cases did not rely upon the Higgins patent shows that in their judgment it has no bearing on the validity or scope of the claims here in issue.

The Court, after disposing of other prior patents, however, says:

> "It is thus apparent that Perkins was advised by the prior art that to obtain veneering glue from starch he need only secure glue with a minimum of water content."

If Perkins or others were advised by any art that any glue that hoped to be successful in the veneering art must have a water content not materially different from the animal glue of that art, it is apparent that **no persons were ingenious enough before Perkins to be able to act on that suggestion** and produce a starch veneer glue having that water content and at the same time the penetration, high sticking power and other characteristics of animal glue in furniture

veneering. In all those instances of the prior art in which less than three parts of water was used, the starch was too far degenerated, i. e., to soluble starch or dextrine, and in consequence no matter what small amount of water was used with it the resultant adhesive was so weak that it was worthless for veneering. In those examples of the prior art in which the starch was not too far degenerated, the amount of water used was always too great and the product likewise worthless for veneering, although very valuable as a substitute for the *dilute* animal glue solutions used in sizing and the like.

The Court pointed out this difference as the main feature of patentability when it went on to say:

> "It does not appear, however, that anyone had obtained a good article of starch or vegetable glue as compared with animal glue. **The patents cited were not in search of veneering glue but of other and weaker adhesives.**"

The Court next says:

> "In course of this quest several of them hit upon a starch glue good enough for veneering glue."

This must mean a starch glue *base;* otherwise the statement contradicts what appears in the next preceding quotation. It is obvious that what the Court meant was that several of them (for example Gerson & Sachse and Virneisel) hit upon a starch *base* good enough for veneering glue to be made out of. This makes the statement agree with the ultimate holding and with their own earlier statement of the prior art.

The Court next says:

> "Higgins describes the appearance of it, so he must have had it."

What does "it" mean? The proofs showed that the appearance of Higgins product was quite different from that

of Perkins final glue and that he did not have it. He describes his product as "creamy white." There may be numerous products which have an "appearance" much like Perkins glue, but when tested they lack the essential properties of animal veneering glue. The Higgins material was the common Library Paste with which the Court is familiar.

The Court continues:

> "A fair article of veneering glue was made at the time of the hearing below from the glue base disclosed in the prior art patents."

This refers to the Gerson & Sachse and Virneisel base and the putting of it into solution with the small amount of water described by Perkins (not the amount described by Gerson & Sachse and Virneisel).

The Court next says:

> "There may have been some confusion of names in the terms cement, paste, etc. Starch glue, however, as compared with animal glue, does not appear to have been treated as an article of commerce prior to Perkins. Its location somewhere on the line of starch characteristics was pointed out by the condition of the art. It was known what it was. The steps to it were practically graduated. They led unerringly to it if followed—*only requiring the adjustment of liquid* to the requisite quality and quantity of degenerated starch." (Italics ours.)

The Court here uses the term "starch glue" to mean the base as was common in the trade and is again attacking the patentability of the *base* claims. This is made clear by the fact that it is referred to as "an article of commerce" and that it is located "somewhere on the line of starch characteristics." Only the base can be so characterized and the Court says it was known what the base was (e. g., Gerson & Sachse and Virneisel base). The steps to the base were practically graduated by degeneration with chemicals if need be. The steps of degeneration led unerringly to the

base if followed, but the one thing the prior art did not disclose was the proper amount of water to use with such base, i. e., as the Court says "*the adjustment of liquid* to the requisite quality and quantity of degenerated starch."

The Court next discusses certain cases as bearing on the non-patentability of the glue *base* and glue *base process claims* (not the final glue product claims), and distinguishes the cases mentioned on the grounds that in them the "formula was made plain and certain" and "the process was plainly disclosed" and produced a new article, whereas in the case of Perkins the glue *base* was old and the process of making it had to be so varied that in each case when different starches were employed some experimentation might be required. For the Court goes on to say:

> "Here we have a glue *base* which the Court finds to be old. To this appellee adds a second step for the purpose of throwing the base into solution—*three or preferably less parts of water* and a solvent to one part of glue base, which results in a *deliverance of good as animal glue from starch base, a process which appellants employed surreptitious means to discover.* If the *glue* and its production from the base were just at hand, why this underhand invasion?" (Italics ours.)

Here the Court argues, in effect, that good as animal glue from starch base was new and patentable and that the selecting of a base (which was old) and dissolving it with 3 parts or less of water and a solvent to produce the "good as animal glue, from starch base," was new. Having already found that the base might be found on the market in a raw state sufficiently degenerated for the purpose, the Court obviously intended to include the glue when made from such a base. They had previously said that to determine the suitability of the base all that is necessary is

> **"to apply the second step of the patent and if the result is the veneering glue of the patents, the operator had guessed right."**

The Court nowhere says the base must respond to the 9 to 1 boil up test or the 170° hot water test.

The Court, however, next says:

> "There was nothing new in the second step."

This is the first reference the Court makes to the novelty of the second or dissolving step. The Court does not state in which prior patent or publication it finds this so-called second step nor does the Court give any reason for holding that there was nothing new in it. By "second step" the Court must have meant the mere dissolving *per se* of starch in water, irrespective *of the result produced*, i. e., whether or not the Perkins veneer glue is produced. On any other assumption the opinion is self-contradictory and the statement is not borne out by the facts.

The Court goes on to say:

> "If the patent for the product and that for the process are valid, then it must be that **the glue** of the patent is new. The District Court having heard the evidence at first hand, **found it was new.** It also sustained the claims for a glue **base which we do not find to be valid.** The question is thus narrowed to the following propositions (1) Was the **glue** of the patents new? (2) Does the process constitute a valid invention?"

In the above quotation, the finished glue is sharply contrasted with the base. The Court, as we will show, did not disturb Judge Sanborn's finding of novelty and patentability of the final glue product claims but answered both of the last mentioned questions in the affirmative.

The Court proceeds:

> "It is true (1) that the adhesive of the prior art patents, although adverted to in those patents as glue, was never placed on the market as a substitute for animal glue or otherwise; (2) that prior to the patents in suit, while its location on the line of starch adhesive products was pointed **out, nobody actually rescued the glue of the patents from its undeveloped state.**"

Here again the Court uses the term "adhesive" to mean the dry starch base, which had been adverted to as "glue" and is commonly called "glue" in the trade. In the last part of the quotation the Court obviously means that while the prior art disclosed starches suitably degenerated (in a natural state as well as by chemicals) to serve as a base for veneer glue, nobody knew that they could be so used and nobody knew the proper amount of water to be used therewith, and nobody knew that the potentiality of a glue having the necessary fluidity, viscosity, penetration, adhesiveness and cohesiveness of animal glue for veneering, ever existed in starch or could be gotten out of any starch by any process or in any way.

The Court further sums up by saying:

> "From the evidence it appears that **there was a demand on the market for starch glue as good as animal glue and suitable for veneering**, and that appellee had built up a large business in that article that the claims of the prior art patents, except the Brueder French patent No. 114,978, aforesaid, **all were in fact limited to pastes, sizings, mucilage and other weaker forms of adhesives**; that appellee's process was not so evident as to be discovered by appellants without subsidizing appellee's employees; that there seems to have been great difficulty in getting at the correct formula; that Perkins labored years to get the latter just right; that, as stated by his expert, Carmichael, 'He proportioned the various steps to one another according to the selection of raw material, in the conversion of the raw material and in the solution of the material, being particular about the various sub-steps by which in the main step effecting the solution, he obtained a uniform and homogeneous product.' All these, considered in connection with the presumption arising from the grant of the patent, lead us to hold, though with some hesitation, that the **claims covering the finished glue product** *as well as the process claims for that article* **are valid and should be sustained.**" (Italics ours.)

It will be noted that the Court does not hold that the process claims are valid and the product valid only when

made by that process; but it holds broadly that the **glue product** claims are valid, and also the claims for Perkins' preferred process for making that product. The Court is here giving its answer in the affirmative to its two previously propounded questions: (1) Was the glue of the patent **new**? and (2) Does the process constitute a valid invention?

As to the Brueder patent, this also was for sizings as hereinbefore set forth.

It is quite true that Perkins had great difficulty in getting any formula or process that would produce "a good as animal glue for veneering from starch base." No one had ever produced such a product before. Perkins explored the field of "somewhere along the line of starch characteristics" and discovered and introduced to the trade the glue that revolutionized the industry. It sprung from Perkins and from no one else. If any one before Perkins had disclosed *any way* of producing a good as animal glue for veneering from starch. Perkins would not have labored years to get it, and the Solva Co. would not have spied on Perkins' factory and hired Perkins chemist, and the C. C. A., 7th, would not have found the product claims here in issue valid. Such a thing as veneer glue from starch was unheard of, never entered the mind of man, before Perkins. Perkins, being the first to discover a starch veneer glue, was entitled to a patent for that glue, irrespective of how it was made. He was also entitled to claims for his particular process of making it, and the fact that he wanted to be careful about carrying out the steps of his process imposes no limitations on his rights to the product. It is known that the final glue product can be made in several ways. Indeed the Court in the Solva case **had before it the fact that Perkins glue could be made from untreated starch by a one-step process.** The evidence did not show that this starch came within the 9 to 1 boil-up test or the 170° test. Judge Sanborn had held such glue to be an infringement and the Court of Appeals in the Solva case nowhere criticised that holding.

The 7th C. C. A. in this last quoted part of the opinion, clearly and unmistakably holds that a patentable invention is present, and specifies what claims are valid and are to be sustained. The Court holds that "*the claims covering the finished glue product,*" i. e., the good as animal veneering glue from starch, are valid and should be sustained. Nowhere does the Court suggest that such glue product claims are to be limited by or to any particular process of making the glue or by or to any particular test for the base from which the glue is made.

Regarding contributory infringement, the Court said:

> "Can a manufacturer, by producing a glue base under the conditions of this case (it was produced under various conditions, most of it was untreated or what the defendants call raw starch) which is not an invention but which may be used, and some of which, the Court finds from the evidence, is intended to be used in a process (second step) which is not in itself, but only in combination (with the base), entitled to patent protection, be decreed guilty of contributory infringement, notwithstanding no attempt is made by the alleged contributory infringer to so use the final step himself, and which glue base can be and is sometimes used to manufacture **other commercial adhesives than glue,** though appellee uses it for making glue only? We think so, and hold that appellant, the Solva Glue Mfg. Co., was a contributory infringer of the **final product** and of the **final process.**" (Parts in parenthesis ours.)

It has been argued that the word "combination" here used means that the process is patentable only when the combination of a first step degeneration by chemicals with the second dissolving step is used. But that is not what the Court says. It is, we submit, referring to the base. It says that the use of the base produced under the conditions of that case (it was produced under various conditions, some by intermixture *but most by merely selecting a natural or raw starch*) in combination with the second or dissolving step to produce the ultimate Perkins veneer glue, was new and patentable. Of this there can be no doubt.

The Court holding this one step (second step) glue as well as the two step glue an infringement says that the Solva Glue Manufacturing Company

> "was a contributory infringer of the final product and of the final process. The rule of law in such case is that one who makes and sells one element of a patented combination with the intention and for the purpose of bringing about its use in such a combination, is guilty of contributory infringement, and is equally liable with him who organizes the complete combination."

The C. C. A. in the Solva Case Did Not Limit the Glue Product Claims to the So-Called Tests for Base.

If the base was old as the Court found, it of course makes no difference how it is made or prepared or obtained. *If the Court intended to limit all the claims including the glue product claims 28, 30 and 31, to some particular process of preparing the base, or to a base in some particular condition of degeneration, then they would certainly have said so in unmistakable language.* Furthermore, the patentable novelty in such case would lie in the base. But that can not be because the Court in the previous part of its opinion had held that the base as well as the process of making it was unpatentable.

The Court concludes its opinion as follows:

> "The decree of the District Court sustaining the claims for a glue **base process and product** and for the so-called **second step** as such **is reversed,** and that part of it which upholds the claims of the patents for the **final process** and the **resultant product** respectively **is affirmed,** with direction to the District Court to proceed further in accordance herewith."

Here the Court holds that the claims for the process of making the glue base *per se* and the glue base as a product *per se* are invalid and this holding we do not contest.

The Court also holds invalid the claims "for the so-called second step *as such.*" As above explained, nowhere in the opinion is it pointed out where these second step claims are

anticipated or the substance of them found in the prior art. None of the prior art patents disclose the dissolving of any starch base *with caustic in about 3 parts or less by weight of water* to produce a glue having substantially the properties of animal glue for veneering. It must be that the Court considered that these claims were not limited to the production of such a glue from such a base but were merely intended to broadly cover the dissolving of starch such as *soluble* starch, in a small amount of water, as had been done in producing certain sizing adhesives. These so-called second step claims, so broadly construed as that, were properly held invalid.

The Court, however, sustains "the claims of the patent for the final process and the resultant product." They can only mean that such process claims as were left and which were limited to steps and features which would *necessarily* produce the starch glue as good as animal veneering glue, were sustained. And it also means that the claims *covering the final glue product, however obtained, were likewise sustained.* It has been argued that because the Court used the word "resultant," it meant that the product claims were only sustained as covering a product made by the two step process. It seems to us absurd to conclude that the use of this term "resultant" was intended to mean any such thing. It is not a word of limitation but merely a word of reference used to distinguish the finished glue product from the starch base product. In every other instance the Court has referred to the glue product entirely independently of any particular process of making the base and has **dealt with it broadly.** The Court previously stated "the question is thus narrowed to the following proposition: (1) Was the glue of the patents new? (2) Does the process constitute a valid invention?" Here the glue product is not at all referred to as the resultant of any particular process of getting the base. The Court had earlier said that "*the claims covering the finished glue product*, as well as the process claims for that article are valid and should be sustained." Here the product claims

are mentioned first and not at all as being in any way limited by the process of making the base. The Court also holds the Solva Company "a contributory infringer of the *final product* and of the final process." Here the final product is not in anyway defined by the process of making the base.

The question whether the glue made from **untreated raw starch** was an infringement and was squarely presented for decision in the Solva case. It was brought to the attention of the Court in the briefs of the parties on that appeal. It was forcefully brought to the attention of the Court in the Solva Company's reply brief as follows (p. 13):

> "Defendants' operation complained of consisted in furnishing starch to veneer factories for use as cement. The major portion of the starch was shipped to the customers just as it was bought upon the market, and without any processing or treatment by appellants, being sufficiently soluble for the purpose. Contributory infringement is alleged as to this portion of appellants' output because under instructions from appellants the starch was dissolved by the customer to form glue by a process coming within the terms of certain claims of the reissue patent in suit. These claims are 13, 28, and 38. Obviously there can be no question here of infringement of those claims which include or specify a preliminary treatment of the starch.
>
> The lesser portion of defendants' output as purchased was not sufficiently soluble to use as glue without some modification and such material was either given treatment to increase its solubility or was mixed with a more soluble starch to give a blend of the desired mean solubility. The specific nature of this treatment will be considered later. If the starch after treatment was too soluble for the purpose it was mixed or blended with a raw starch of insufficient solubility for use alone. In other words, **most of defendants' output was a starch which required, and was given, no treatment**, and the remainder was either a blend of under-treated and over-treated starches, or in case a treatment given a particular batch proved to have produced the desired degree of solubility it was shipped out unmixed."

There was no evidence that this raw, untreated starch responded to either the 9 to 1 boil up test or the 170° test.

If the 7th C. C. A. had intended to reverse Judge Sanborn's holding that Solva glue made from this raw or natural starch just as it came on the market, was an infringement, the Court, we believe, would certainly have said so in unmistakable language as the question was squarely presented for decision. Likewise if the 7th C. C. A. saved the glue product claims by reading into them the so-called tests for the base they would have similarly saved the second step process claims instead of holding them invalid.

We submit there is not one word in the whole decision which justifies the conclusion that the Court intended to hold the glue product claims 28, 30 and 31 valid as covering the glue *only* when the glue was made by a two step process or from a base in any particular condition of degeneration. On the contrary the facts before the Court were such and the whole line of reasoning of the Court was such that the Court, we believe, must have had in mind and must have intended that glue made by a one step dissolving process from any suitable starch in its natural state was an infringement of the final glue product claims 28, 30 and 31.

The Solva Petition for Rehearing.

After the C. C. A. had handed down its decision in the Solva Case the defendants, Solva Company, et al., petitioned for a rehearing, and the Court, we believe, by certain implication has here confirmed our view as to the meaning of its decision. In this petition for rehearing the defendants prayed (Rec., 346):

> "For a rehearing of the appeal herein for the purpose only of more definitely indicating the extent to which the decree of the District Court is sustained"

and they argued as follows (Rec., 347):

> "Your petitioners fear that in the further proceedings in accordance with the opinion, confusion may

arise in connection with that part of the final paragraph of the opinion sustaining the claims relating to the 'final process and the resultant product.' While it is our understanding that the 'final process' to which reference is here made is the complete refined process as finally adopted and described in claims 7 and 9 quoted in the opinion, we have reason to believe that a different interpretation is entertained by complainant-appellee, as evidenced by the circular, a copy of which is printed herewith, and which we are informed and believe was distributed broadcast to the veneering and paper trades. Furthermore, the only claim of those before the Court on appeal which relates to a product other than the glue base and which therefore can be contemplated as for the 'resultant product' of the final process, is claim 28 of the said patent, and is as follows:

"28. A glue comprising cassava carbohydrate rendered semi-fluid by digestion and having substantially the properties of animal glue.

This claim by reason of its indefiniteness is possibly susceptible of interpretation either as covering the product of the second step alone, under which construction it could not be sustained in view of the invalidity of the claims to the second step, or as covering the product of the two successive steps sets forth in claims 9 and 10 of the alkali patent."

And plaintiff replied (Rec., 353):

"The opinion points out * * * that the **glue base of the patents may be obtained in a variety of ways.** Such a base and the process of making it, after **being given a broad construction by the Court, is found to be old,** and the Court also says the second step is not new or patentable 'as such'; but the combination of the two operations in related succession to produce the good as animal glue suitable for veneering, the Court finds to be new and patentable as a process, and the resulting finished glue, the Court finds to be new and patentable as a product.

As the opinion plainly indicates, the final glue product may be made by suitably treating a suitable base, whether previously degenerated by the alkali treat-

ment, or by the acid treatment, or obtained by intermixture **or simply found in the market**—provided only that that base is in the proper state or condition of degeneration when treated to make this final glue product.

The Court evidently felt that the 'second step alone' or the 'second step as such' might produce other products than the 'starch glue as good as animal glue and suitable for veneering' covered by claim 28 and others (as if, for example, applied to the under-degenerated starch, such as raw starch, or to an over-degenerated starch, such as dextrine), and therefore held that the claims for the 'second step as such' were invalid."

In the last sentence, plaintiff obviously had in mind as "raw starch" the old *high viscosity* raw starches, not the modern raw starches of medium viscosity like defendants' base.

The Court made no criticism of plaintiff's reply and denied the petition for rehearing without opinion, and thereby, we believe, repudiated defendants' view and confirmed our view that the patent was held to cover the glue when made from untreated **starch as found on the market**, provided only that the starch is such that the good as animal veneering glue is obtained as described in the product claims 28, 30 and 31.

Judge Sanborn's Memorandum on Entry of Final Decree in the Solva Case (Rec., 359).

The mandate which came down to Judge Sanborn (Rec., 358):

"ordered, adjudged and decreed * * * that the part of the decree of the said District Court in this cause which upholds the claims of the patents for the final process and the resultant product respectively, be, and the same is hereby affirmed.

And it is further ordered, adjudged and decreed by this Court that the part of said decree of the said Dis-

trict Court sustaining the claims for a glue base process and product and for the so-called second step, as such be, and the same is hereby reversed, and that this cause be, and the same is hereby remanded to the said District Court with direction to proceed further in accordance with the opinion of this Court."

An accounting having been waived by stipulation, the only thing left for Judge Sanborn to do was to enter final decree on this mandate and in doing so **he was not called upon to pass on the scope or construction of any of the claims.** The mandate did not specify the claims by number so that it was left for Judge Sanborn to define by number which claims the C. C. A. had held valid and to define by number which claims the C. C. A. had held invalid. As to the claims for the glue base and glue base process, to wit, claims 24 and 16, there was no dispute but that the C. C. A. had held them unpatentable. As to the claims "for the so-called second step, as such" there was a dispute as to which claims were meant. The defendant there contended that such claims as 11, 13 and 38 were meant, while plaintiff contended otherwise. Plaintiff argued that the C. C. A. in upholding "the claims of the patents for the final process" meant such claims as 11, 13 and 38, while defendant contended that these were claims "for the second step as such" which the C. C. A. held invalid. The controversy before Judge Sanborn centered about this dispute. The defendant there also contended that the C. C. A. had held invalid the glue product claims 28, 30 and 31, etc.

Judge Sanborn agreed with plaintiff as to the glue product claims 28, 30 and 31 but disagreed with plaintiff with regard to the second step process claims 11, 13 and 38 and held that the C. C. A. intended that those should be decreed invalid.

Judge Sanborn in his memorandum for final decree said (Rec., 359):

"The opinion of Judge Kohlsaat requires very careful study, as well as the patents, and even then the

opinion is obscure, and another appeal may be necessary to fully determine its meaning."

Judge Sanborn here says "another appeal may be necessary to fully determine its meaning." He was ruling against the defendants on the final glue product claims 28, 30, 31, etc., holding them valid and infringed, and the defendants might appeal; and he was ruling against plaintiff as to claims 11, 13 and 38, and the plaintiff might appeal; **but as to the glue product claims 28, 30, 31, etc., he held them valid and infringed in his final decree, and plaintiff could not appeal from such holding in its favor.** Judge Sanborn (discussing the process invention and not the glue product invention) goes on to say in his memorandum (Rec., 359):

> "The first process or step of the patents is for the purpose of creating a suitable starch base, and then applying to that base the second step, in order to produce the final product, or starch glue. These are the only steps or processes described, and they may be taken singly or together. Both are old and unpatentable when taken separately, but when joined together to produce starch glue which has the properties described by Mr. Perkins, and which is as good or better than animal glue, they are now and make patentable subject matter, both as a process and as producing a patentable product consisting glue."

There was obviously no necessary implication in this, that the new glue was only patentable when made by the two-step process. Judge Sanborn says:

> "Glue made in the manner described in the patents, and having the characteristics there defined is also a patentable product."

The patents as heretofore pointed out described at least two ways of making the final glue product, one by the two-step process which was preferred, and the other by a one-step process applied to so-called natural starch; and Judge

Sanborn's statement above is, therefore, to the effect tha
the **glue made in either of these ways is a patentable produc**
Judge Sanborn continues:

> "The glue base is not such a product because it i
> not only found in a natural state, but was made b
> prior inventors as a base for mucilage as well as
> glue produced by a different second step."

Here Judge Sanborn states that **the glue base may b**
found already sufficiently degenerated in the natural stat
and it is clear from this and from the immediately precedin
sentence quoted above that he found that **the Perkins glu**
made from such a natural base was, equally with glue mad
from a processed or treated base, the product which the 7t
C. C. A. had held patentable and covered by "the finishe
glue product" claims which the C. C. A. had held valid
Judge Sanborn continues his statement of reasons for hold
ing invalid the base claim 24 and the first-step process clai
16 as follows:

> "The first step designed to produce the glue base i
> therefore old and necessarily unpatentable, hence th
> base itself must be equally impossible of patent pro
> tection."

But when it came to what was meant by the second step
Judge Sanborn was uncertain. He said:

> "But as the second step, when applied to a suitable
> glue base and with the result described, produces a
> patentable product, why does the Appellate Court de-
> cide it to contain nothing new, when considered alone
> and by itself? This is not explained in the opinion, and
> the meaning must be gathered from the context."

Judge Sanborn assumes without question that the Per-
kins glue made either from the starch found in suitable con-
dition in a natural state or from starch previously suitably
treated by the first step, was, in the C. C. A. decision, held to

be a patentable product, but he was unable to understand why the C. C. A. considered the second step process claims invalid and why the claims to the second step applied to either of such bases with the results described, contained nothing new.

Judge Sanborn then quotes from the decision of the C. C. A. where it is found that the only difference over the prior art was the difference in the amount of water (Rec., 360, 361), and that starch comes on the market in a natural state degenerated to different degrees, and that the way to find out if a starch is suitable is to apply the second step and see if it makes the veneer glue. Judge Sanborn further quotes from the decision of the C. C. A. where the C. C. A. points out that the Solva glue was made by merely applying the second step to the base, and (Rec., 361) where the C. C. A. points out that the prior art patents

> "were in fact limited to pastes, sizing and mucilage and other weaker forms of adhesives," etc.

The last part of this quotation from the C. C. A. decision reading (Rec., 362):

> "All these, considered in connection with the presumption arising from the grant of the patent, lead us to hold, though with some hesitation, that *the claims covering the finished glue product as* well as the process claims for that article are valid and should be sustained." (Italics ours.)

This apparently made it clear to Judge Sanborn that the 7th C. C. A. rested the patentability of Perkins' invention in all its respects on the "finished glue product" and that the claims for the **process** were only valid when the process described in the process claims was such as to **necessarily** produce "that article," and that the so-called second step claims were not limited to a process which would **necessarily** produce a veneering glue.

Judge Sanborn then says:

> "From these quotations it seems probable that the Appellate Court intended to sustain only those claims of the patent which include only the two steps, and only when their use results in the Perkins glue, together with those additional claims which count on such glue as a product of the two steps, and no others," i. e., **no other claims** and not no other glue.

Bearing in mind that Judge Sanborn was not construing or defining the *scope* of any of the claims but merely defining by number which had been held valid and which invalid, it is clear that he used the words "as a product of the two steps" merely to identify and distinguish the glue product from the other product, i. e., the glue base (the product of the first step which was frequently called "glue") the claims for which he was finding invalid under the mandate.

It was not the two steps which, as such, gave novelty to the process claims but as the Court states, only when their use results in the Perkins glue—a glue new in kind and the Pole Star of novelty; **and "such glue" was "a product of the two steps" but this is far from saying that if otherwise made it would not be covered by the patent.**

We submit there is absolutely nothing in this memorandum of Judge Sanborn justifying the conclusion that he intended to interpret the mandate of the 7th C. C. A. as limiting the final glue product claims 28, 30, 31, etc., to the finished glue when it was made by the two-step process or from a base coming within the 9 to 1 boil up test or the 170° test. Any such finding would have been outside of his duties.

Judge Sanborn goes on to say:

> "The result of the foregoing is that the argument of counsel for defendants is adopted so far as the construction of the decree is concerned, and that of plaintiff's counsel rejected."

Judge Sanborn here is referring to the argument of counsel for defendants that the 7th C. C. A., when it held

certain second step process claims invalid, referred to process claims 11, 13 and 38. The quotation, we submit, has no reference to any interpretation or construction of the glue product claims 28, 30 and 31; for as to those product claims Judge Sanborn adopted the argument of plaintiff and rejected that of defendants' counsel, who contended that the 7th C. C. A. held them invalid.

The Disclaimer as to Process Claims 9, 10, 11, 12, 13, 14 and 38 and the Glue Base Claims (Rec., pp. 230, 231).

The final decree on mandate in the Solva case having held certain claims invalid, a disclaimer was filed under U. S. R. S., Sec. 4917, as required by statute.

The Court found that Perkins was not the inventor of the glue base *per se;* nor the inventor of the first step degeneration process, *per se*, nor of the second step, *as such.*

Plaintiff accepted this holding and filed an absolute disclaimer of these base and base process claims, and disclaimed from the second step process claims any process which did not have certain process features. But we submit this could not affect plaintiff's monopoly secured by the final glue product claims 28, 30 and 31. The substance of the disclaimer is as follows (Rec., 231):

> "Enters its disclaimer of claims 1, 3, 4, 6, 7, 8, 16, 24, 25, 26 and 27 thereof (to wit, the claims for the glue base per se and for the process of making the glue base per se) and further it hereby disclaims from claims 9, 10, 11, 12, 13, 14 and 38 of said reissued Letters Patent, No. 13,436, any process of making glue, excepting where the starch or starchy product or carbohydrate subjected to the process is degenerated to the extent described in the said reissued Letters Patent No. 13, 436, whereby the process results in the good as animal glue described in said reissued Letters Patent No. 13,436."

As will be seen from the above, the disclaimer did not mention the glue product claims 28, 30 and 31 here in suit. No disclaimer was filed as to them.

Plaintiff did not file the disclaimer as to them because the glue as defined in these claims was new in and of *itself*, and *they had been held valid.*

The decision required no disclaimer whatsoever with regard to the glue product claims in suit. This is more fully discussed hereinafter.

Judge Sessions' Decision in the West Michigan Furniture Company and Hood & Wright Cases (279 Fed., 454).

These suits were started in 1919 shortly after the termination of the Solva litigation and **subsequent to the disclaimer.** The alleged infringing glue was made by dissolving the base in 2½ parts of water with caustic substantially as defendants do here. The starch base, however, instead of being all one brand of raw cassava was a mixture of starches as they came on the market, about 70% being natural or raw cassava just as it comes on the market and the balance partly raw cornstarch known as pearl cornstarch, and partly thin boiling cornstarch.

Judge Sessions says in his opinion:

> "The glue base manufactured and sold by the National and International Process Companies and used by defendants *is not prepared in accordance with the method or first step of the process of the patent but is produced by mixing commercial* starches of different grades and kinds, the *raw*, under-degenerated and over-degenerated starches being so proportioned that the mixture has the same average degeneration and the same water absorptive properties as the processed glue base of the patent." (Our italics.)

Judge Sessions, interpreting and following the decision of the 7th C. C. A. in the Solva case, held that the glue made from this base was an infringement, which is in effect a

holding that to infringe the glue product claims it is unnecessary that the base be one produced by Perkins' first step, but that it may be a mixture of raw underdegenerated and overdegenerated starches just as they come on the market and nowhere did he say that it was necessary that the base respond to the 9 to 1 boil up test or the 170° test.

It did not appear from the testimony whether this National Process and International Process glue base came within the 9 to 1 boil-up test. Indeed, the testimony was silent on the subject. Judge Sessions, therefore, must have held it immaterial whether or not said base came within this 9 to 1 boil-up test. Judge Sessions says:

> "It is equally clear that the claims for the *finished product* (Claims 28, 30, 31, etc.) and for the complete process of preparing such product, including the two steps thereof in combination or succession (Claims 19, 20, etc.) are valid." (Parts in parenthesis ours.)

Here again the Court makes the product—vegetable veneer glue—the Pole Star of novelty and by which the novelty of the process claims is to be measured, and not the reverse.

Judge Sessions goes on to say:

> "It is also certain that the claims for the glue resulting from the application of the final process to the glue base of the patent are valid."

This last quotation refers to the second step *process* claims 13, 38, etc., not only because there is no other language that can refer to claims 13 and 38 but also because they are the only claims drawn to the application of the final or dissolving step of the patent to the glue base of the patent, those claims having been limited by the disclaimer to a final or dissolving step applied to a base degenerated to the extent described in the patent.

It has been argued that the last mentioned quotation refers to the product claims 28, 30 and 31. This cannot be, because these product claims 28, 30 and 31 were covered in the preceding sentence in Judge Sessions' opinion.

Judge Sessions further says:

> "In his specification, the **patentee points out, or at least suggests that his glue base may be produced without using his preferred process.** It must follow that the claims for the inventor's final process applied to or in combination with the glue base of the patent, in whatever manner such base may have been produced, are valid."

Judge Sessions was here discussing Perkins' "final process"; in other words, the process covered by claims 13 and 38, and even as to those he held that the claims are not limited to Perkins' preferred process, but that they cover the process when applied to the glue base of the patent in whatever manner the base may have been produced.

Judge Sessions takes up the disclaimer, saying:

> "Of course the plaintiff is bound by its disclaimer, but **the limitation thereby imposed does not extend beyond the plain meaning of the language employed and the purpose sought to be accomplished.**"

The language of the disclaimer shows that the limitation applies only to the second step process claims 13 and 38, **and does not limit the glue product claims 28, 30 and 31,** because those had already been held valid by both Courts, and there was no necessity for any disclaimer of any kind as to them.

Judge Sessions says:

> "The sole object of the disclaimer was to narrow the claims with respect to the starchy product or glue base to be subjected to the final *process* of the patent."

In other words, it had reference only to the final *process* claims 13 and 38, etc. As to those process claims 13 and 38, and as to those only, he says:

"Under the disclaimer the starch or starchy product to be processed (under process claims 13 and 38) must be degenerated to the extent described in the patent before being subjected to the final process of the patent. So limited the claims are valid and infringed." (Part in parenthesis ours.)

He thereby implicitly finds that the product claims 28, 30 and 31 are not so limited.

In these two cases against West Michigan Furniture Co. and Hood & Wright, the dependants took appeals. No supersedeas was asked pending these appeals so the accountings were proceeded with in accordance with the interlocutory decrees and the Master found the plaintiff entitled to profits of $15,494.46 in the West Michigan Co. case and profits of $61,973.14 in the Hood & Wright case. The appeals were later withdrawn or dismissed for lack of prosecution.

The Nature of the Infringement in the Case at Bar.

The next case to be tried was the case at bar.

In this case the defendant Holland Furniture Company used two bases in making their glue. They used a little starch base put out by the International Process Company (the same as in the West Michigan and Hood, et al., cases) but the great bulk of their base was a base put out by the Kane Manufacturing Company.

The defendant raised no question as to infringement based on their glue made from the International Process base (Rec., 73), and the whole case before Judge Sessions centered about the question whether or not the Holland Furniture glue made from the *Kane base* was an infringement, so the only question here is whether defendant Holland Company's glue made from the Kane base is an infringement. The defendant did not attempt to differentiate its *Kane* base glue from the glue of the patent in suit or from the glue made from the International base which it conceded to be an infringement. There was no testimony re-

futing plaintiff's testimony to the effect that *Kane* base glue (the final glue) had all the characteristics and was identical with the glue made by the Perkins preferred process. The defense was that the Kane base glue was not made by the particular process or from the particular base Perkins preferred and described in the patent. Plaintiff contended that in respect to infringement of the glue product claims 28, 30 and 31 the particular process employed was immaterial. We believe Judge Sessions agreed with this in his opinion for interlocutory decree hereinafter discussed and an interlocutory **decree was entered holding the Kane base glue to be an infringement of the glue product claims 28, 30 and 31.** After later decisions by the C. C. A., 2nd, and the C. C. A., 7th, Judge Sessions reversed himself and entered the final decree below holding the *Kane* base glue not an infringement on the ground, we understand, that these Circuit Courts of Appeal had read the Perkins two-step process into these product claims and as so limited by construction they were not infringed by this *Kane* base glue.

To show that defendants' process produces the same glue as Perkins we will discuss the defendant Holland Company's process in some detail.

The defendant dissolves the Kane base with caustic in the same 3 or less parts of water which Perkins specified and **produces the same glue as Perkins.**

Defendant's Base is Degenerated.

At the trial in open Court plaintiff's expert testified that **the Kane base was degenerated.** To meet this testimony defendants put on the stand Mr. Grossman, the chemist of the Kane Manufacturing Co., which sold the Kane base to defendant, and he testified that defendants' Kane base was pure cassava flour of G. T. A. brand or sometimes G. T. G. brand which is identical with G. T. A. (Rec., 48), and that the only treatment the Kane Co. give this base is a sieving process to remove impurities and that they give it no chem-

ical or degeneration treatment of any sort (Rec., 48, 49). Plaintiff's counsel has no reason to doubt the truth of this. Grossman then stated that in Java the starch was made by a washing process and the more washings it receives the higher its viscosity (Rec., 487, 500). He further states that the Kane base runs uniform (Rec., 518). He practically admits that the **Kane base may have been degenerated in Java** by fermentation although he says he does not believe so (Rec., 55, 56) and bacterial action in Java might reduce the viscosity of the starch (Rec., 57). **He says if it had been degenerated, the starch would probably show an acid reaction** and that the Kane base is "absolutely neutral" (Rec., 57). However, both **defendants' expert**, Epstein, and plaintiff's expert, Dr. Grosvenor, **found it to have a distinct acid reaction.**

The substance of defendants' further testimony on the point is as follows:

Seligman testified as to the method of preparing cassava starch in Java in which the starch is separated from the root by grinding and washing processes. But it is difficult to get into factories and be permitted to nose around and ask questions or touch anything and he only examined one factory carefully (Rec., 476). He says some cassava is given more washings in Java than others which determines its quality (Rec., 470). He further says the purity of the wash water and the agricultural conditions affect the quality of the product (Rec., 472), but the more washings it is given the more body or higher viscosity it has (Rec., 475, 478).

The testimony of defendants' witness Wilson was practically to the same effect (Rec., 483, 486). He only visited two mills (Rec., 482, 484). None of the witnesses examined the mill in which defendants' Kane base, the G. T. A. and G. T. G. brand is prepared. Grossman says repeated washing increases the viscosity by gradually removing certain matter which comes from the intermediate stages of starch development, the presence of which in the starch is the cause

of its relatively low water absorptiveness or viscosity (Rec., 516). He tested the viscosity of a sample of defendants' Kane base, the Perkins base, two raw starches, K. T. H. and Royal, just as they come on the market, and a sample of starch he himself prepared and which had received different amounts of washing with the following results (Rec., 512-515):

K. T. H. Starch	49 3/5
His Starch after 9 Washings	55 2/5
Perkins Commercial Base	60 3/5
Defendants' Kane Base	100
His Starch after 12 Washings	108 1/5
" " " 15 Washings	138 1/5
Royal Starch	166 1/5

The testimony of defendants' witness Epstein was to substantially the same effect (Rec., 525-527). In his tests for viscosity by a somewhat different method from Grossman's he got Perkins base—102, Kane base—132 and Royal cassava—164 (Rec., 526). He also performed a centifuge test (Rec., 521) and a Gold Number test (Rec., 523, 524) both of which showed that the Kane base was considerably more degenerated than the Royal, although not quite so much so as the particular commercial sample of Perkins base which he selected.

The experts for both parties agree that viscosity is a measure of the extent of degeneration. Grossman says viscosity will show whether starch has been degenerated (Rec., 494) and Dr. Grosvenor points out that it is a measure of the degeneration (Rec., 541, 556), and Epstein says degenerated starch shows lower in viscosity (Rec., 506).

Therefore what the tests made by defendants' experts show, is that **the Kane base is considerably more degenerated than the sample of Royal and other starches which they tested.** Indeed the best Epstein can say is that the Kane product has not been so much degenerated as the Perkins commercial product (Rec., 524).

Since the grant of the Perkins patent the viscosity of cassava starches as they come on the market has fallen off greatly (Rec., 41, 42, 70-72, 130) so that defendant is enabled to obtain sufficient starch **already suitably degenerated and sufficiently uniform to make the glue therefrom** without first giving it a preliminary degeneration treatment. The viscosity of the so-called Royal as it comes on the market has decreased considerably, about 40% (Rec., 70, 546), so that a fairer comparison of viscosities would be as follows:

K. T. H. Starch as it now comes on the market	49 3/5
Perkins' commercial base	60 3/5
Defendants' Kane base	100
Royal as it came on the market in 1912	about 275

Other cassava starches came on the market with similar high viscosities around 1912 (Rec., 71). It is these old high viscosity starches which Perkins referred to as **"ordinary"** starch and found unworkable in about 3 parts of water with the machinery then available. Therefore, when these are taken into consideration it is seen that **defendants' Kane base is almost as much degenerated as the particular sample of the Perkins base.**

Defendants' witnesses claim (although they have no positive knowledge of the matter) that no chemicals were put in the batches in Java and if such is the case **the only explanation for the presence of the acid in the Kane base is that it underwent bacterial or fermentative degeneration** in the process of preparing it in Java, or subsequently. Epstein admits that degeneration may be obtained by bacteria or fermentation (Rec., 506).

We do not question but that repeated washings may in some or many cases increase the viscosity of the starch, and the degenerated condition of the Kane base may be due to *lack* of repeated washing, but the presence of the acid in

the Kane base indicates very strongly that it has also undergone fermentive or bacterial degeneration. For the purposes of this case we cannot see that it makes any difference whether the low viscosity or degenerated condition of the Kane base is due to one cause or the other or to some different cause.

The defendants apparently realized that their testimony tended to confirm rather than controvert, plaintiff's contention that defendant's Kane base was degenerated for they next had Mr. Grossman attempt to perform the 170° test described in the patent in an attempt to show that the base was not degenerated so much as to come within that test. This test is described at page 4, line 75, of the patent.

But as previously explained, the critical test for determining whether the base is suitable, if any, seems to be the one referred to at page 4, line 42, of the patent, where it says the base is one which

> "may be formed into glue by using only from one to three parts of water."

There is no question but what defendant's Kane base falls within this test because it is admitted that defendant made its glue with it by using only about 2½ parts of water.

This is applying the second or dissolving step of the patent and is **the test approved by the Circuit Court of Appeals in the Solva Case** (ante, p. 66) **and by defendant's expert in this case** (ante, p. 28).

Plaintiff conceded at the trial that defendant's Kane base was not degenerated to the point where it would come within the 9 to 1 boil-up test described in the patent, but the testimony above discussed makes it clear that defendants' Kane base was degenerated almost to this point, and plaintiff's expert testified (Rec., 36, 72, 73) that **defendants obtained a further reduction in viscosity in the second or dissolving step by prolonged agitation with heat thereby making the resulting glue identical with that of the patent.** This testimony is not seriously disputed.

Defendants' counsel say in their brief (p. 3) that defendants' glue is a "heavier glue." Of course, defendants' mixture is somewhat thicker, heavier and more viscous during the *earlier* stages of the digestion or solution. This would be expected. Defendants' witnesses have emphasized this as though the difference existed when the glue was finished, whereas, in fact, **when the glue is finished and ready for the veneers it is just like the glue produced by Perkins' preferred process.**

If plaintiff were here alleging infringement of *process* claims, and those process claims were limited to the use of a base degenerated to some particular degree before being dissolved, then it would be pertinent to show that defendants, in carrying out their *process,* used a base in that particular condition. The kind or condition of base used would be a part of the process. But when, as here, plaintiff is resting only on the finished glue *product* claims, the claims which cover the starch glue as good as animal glue for veneering, then, since the **defendants' process produces this same glue product** of the patent, and **the patent says it may be produced without the preliminary treatment,** the product claims are infringed.

Judge Sessions' Opinion for Interlocutory Decree in This Holland Furniture Co. Case (279 Fed., 457).

Judge Sessions does not attempt to hold that, to infringe the product claims, the "starch base of the required degree of degeneration" must be one which comes within the 9 to 1 boil up test, or 170° hot water test.

He says:

> "Manifestly the resultant glue base is the same whether consisting of a mixture of starches of different degrees of degeneration or of a single starch of the same degree of degeneration as the mixture. **Defendants' final product** is obtained by subjecting the glue base to the treatment described in the patent as the second or final step of the patented process and **is identical with the glue of the patent.**"

This, we submit, is a flat holding that the Holland Furniture Company glue made from the Kane base is identical with the glue of the patent.

Judge Sessions further says:

> "And while probably, there is not such a complete independence of product and process in the product claims as is contended for by plaintiff, defendant, Holland Furniture Company, does so combine product and process in the preparation of its glue as to infringe the product claims of the patent."

In the first part of this quotation, Judge Sessions, we believe, had reference to a statement made by plaintiff's counsel at the trial, to the effect that the glue product claims 28, 30 and 31 covered the glue product no matter how made. Judge Sessions evidently felt that these glue product claims had certain process features recited in them by which they must be limited, such as, for example, that the glue must be one "formed" of a starchy carbohydrate "by union therewith of about 3 parts or less by weight of water," etc., and that the glue must be one in which the base "is dissolved without acid in about 3 parts of water or less." Judge Sessions evidently thought plaintiff's counsel contended that the glue product claims were not limited by **these limitations expressed in the claims themselves, whereas the fact is that we admit that the claims are limited by these limitations which are described in the claims themselves. These limitations may be considered in the nature of process limitations or in the nature of limitations as to resulting conditions in, and characteristics of, the glue itself;** but in so far as any process limitations are recited in the claims themselves, the claims are, of course, so limited, and defendant, clearly infringes them, because **as to any such limitations they are equally and concededly found in defendant's glue.**

It will be noted that Judge Sessions first considers the infringement of the *product* claims, and finding the defendant's final glue substantially identical with the glue of the

patent, he finds the *product* claims 28, 30 and 31 necessarily infringed. Judge Sessions next and separately therefrom takes up the *process* claims 13 and 38, which were in issue before him, and says:

> "In compliance with the promise made in its answer to one of the interrogatories propounded, defendant, Holland Furniture Company, furnished to plaintiff what is claimed to be a fair sample of the base used by it in the production of its glue. The sample of glue base so furnished has been tested and analyzed by plaintiff's expert who testifies that the starch of which it is composed has been degenerated as required in the *process* claims of the patent. Testimony based upon an analysis of a single sample is not entirely satisfactory and ought not to be accepted as conclusive. If defendants' glue base consists of a starch which has been degenerated as described in the patent, the *process* claims declared upon are infringed. On the other hand, if the starch base has not been so degenerated, the *process* claims are not infringed. Further proof upon this question may be taken by either party upon the accounting." (Italics ours.)

It is to be noted that Judge Sessions makes a sharp distinction here between the *product* claims and the *process* claims, limiting his discussion and ruling in regard to the degeneration of the base to the *process* claims. In other words, there was no dispute at the trial but that all of the final glue made with the Kane raw starch base was the same, and the Court held that it was "identical with the glue of the patent" and was an infringement "of the product claims of the patent," but the *process* claims of the patent are limited to the degree of degeneration described in the patent, and since the testimony as to the degeneration of the Kane base was confined to one sample (even that concededly did not come within the 9 to 1 boil-up test), the Court did not feel that the testimony should be accepted as conclusive on the issue of infringement of the *process* claims, even though **all the glue made therefrom was an infringement** of the

product claims whether it was so degenerated or not, and, therefore, for *accounting* purposes, Judge Sessions permitted further proof on the issue of infringement of the *process* claims.

Our interpretation of Judge Sessions' opinion was confirmed by the Master in his report. After quoting from Judge Sessions' opinion, the Master says (Rec., 602):

> **"It is clear that the Court has authorized a decree that the defendant has infringed the product claims of the patent."**

This referred to the glue made from the Kane *raw starch base*, for the Master then goes on to say:

> "Nevertheless, I have been directed to receive testimony as to the degeneration of the glue base furnished to the defendant by the Kane Manufacturing Company and used *in its infringing product* and have done so." (Italics ours.)

Then after further quoting from the opinion of Judge Sessions and discussing the testimony, the Master concludes (Rec., 604):

> "I find, therefore, that the **process claims of the Perkins patent are not infringed** by defendant's use of the Kane glue base.
>
> This finding cannot be used however, as a basis for my computations on the accounting. **The product claims of the patent have been decreed to be infringed** and the defendant's entire profits resulting from such an infringement must be calculated and reported."

The Master's findings do not dispute that the Kane base was degenerated in the sense that it was of relatively low viscosity. He bases his conclusion of non-infringement of the process claims on his finding that the base was not sufficiently low in viscosity to come within the 170° F. hot water test referred to, and, therefore, according to his con-

clusion, it was not degenerated to the extent specified in the patent as required by the process claims. Whether the *process* claims are limited to this test is no longer material for none of the *process* claims are here relied upon.

The Master found that the defendant Holland Furniture Co. purchased and used 121,149 pounds of glue base (most of which was the Kane glue base) and because of the use of which to make the veneering glue it infringed the product claims of the patent and that its savings because of said infringement amount to $30,802.55 (Rec., 608).

Judge Sessions failed to confirm the Master's report, not because it was not correct as based on the interlocutory decree, but because in the final decree he was about to enter he was reversing his interlocutory decree in which he held the Kane base glue to be an infringement, and under such reversal the Master's report was no longer applicable.

Judge Cooper's Opinion in the Standard Furniture Company Case (279 Fed., 458).

This was the next case to be tried. In this case the defendant likewise used as a base a cassava starch just as it came on the market. It was called "Viscamite." There was no evidence that it had received any chemical degeneration treatment for the purpose. **It was substantially the same as the Kane base in this Holland Case.** As in all the other cases the glue was made by dissolving the base in the critically small amount of water with caustic as specified by Perkins.

Judge Cooper in his opinion said:

> **"Before Perkins, animal glue was practically the only glue used in the art of furniture veneering where strong joints were required."**
>
> "The starch adhesives known before Perkins either contained **too much water,** or, if they contained the requisite small amount of water, **lacked for other reasons the cohesive and adhesive strength and the spread-**

ing and flowing qualities necessary in the wood veneering art.''

After pointing out the exacting requirements for a veneer glue and the great success of Perkins glue and that it met these exacting requirements, Judge Cooper refers to the Perkins preferred two step process and says:

> ''The **defendants omit the first step,** but take a cassava starch as a base and substantially follow the second step of the Perkins patent and **get glue like Perkins glue.''**

After disposing of other defenses Judge Cooper takes up the prior art and says:

> ''Coming now to the defense numbered (2) above, the prior art, it is found that most of the patents cited by the defendants have heretofore been dismissed by the courts as not being anticipatory of the Perkins patent. **He made an advancement in the art which was meritorious and far-reaching.** In four decisions, three in two District Courts and one in the Circuit Court of Appeals of the Seventh Circuit, it was held that the Perkins patent for **glue product had not been anticipated** by anything in the prior art which was cited to these courts. Of the patents in evidence here and not in the former cases, there are but two, the French and Belgian patents, Nos. 102,200 and 34,869, respectively, of Gerard, which disclosed a process and product called 'Apparatine.' Gerard's English patent for the same product was in evidence and considered in the Solva Case, but the defendants contend that the claims were not as fully stated as in the corresponding French and Belgian patents. **This 'Apparatine' was entirely different from the Perkins Glue and wholly impracticable for wood veneering.** The broad general statement in the Gerard patent that the materials may be mixed in any proportion and a product like 'Joiners Glue' may be obtained does not negative the patentable novelty of the Perkins product. **Apparatine has been known for thirty years and was never suitable for or used in wood**

veneering or similar use. It was only after Perkins had discovered the practicability of the *changes in the proportion of the ingredients of the glue,* that his better than animal glue came into popular use. The change of proportions used by Perkins enabled him to secure a glue that was marketable and acceptable to the wood-veneering industry. These **differences in kind** as well as degree resulted in a product more useful than that which had theretofore been made or known. This *product* was not anticipated by Gerard and was patentable. Mineral Sep., Ltd., vs. Hyde, 242 U. S., 261; 37 Sup. Ct., 82; 61 L. Ed., 286. Since the evidence of prior art as to the other patents has been ably discussed by Judge Sanborn, Judge Sessions, and the Circuit Court of Appeals, and very little is new here, it would be needless repetition to repeat it." (Italics ours.)

The defendants in the Standard Furniture Company case contended that the glue was only new and patentable when made by the Perkins two step process or from a particular base, and Judge Cooper said:

"The defendants' contention is that the Perkins patent in suit is limited to glue made by combining the two steps of the Perkins process, viz: (1) the degenerative step to produce a degenerated glue base; and (2) the dissolving step to produce the glue; that glue made in any other way is not infringement. They claim, further, that their glue base is not degenerated by the Perkins first step; and is of high and not of low viscosity, as is the base produced by Perkins first step; that their glue, not being made from the Perkins base, or its equivalent, and therefore, not by the two steps of the Perkins process, is outside the Perkins patent and not an infringement.

The Circuit Court of Appeals in the Solva Case did hold that the claims for the first and second steps as such, taken separately, were invalid. But *the Court, nevertheless, held the plaintiff's patent infringed where, as here, a starch, coming in its commercial state,* or by mechanical mixture of commercial starches, or otherwise, degenerated to a stage *equivalent to that produced*

by Perkins first step, was treated by the second step and resulted in *Perkins glue or its equivalent.*" • • •

"But in the patent in suit it is claimed that raw starches by proper adjustment of conditions may be used without the first step treatment. *Even if the patent did not so claim, doubtless the doctrine of equivalents would protect the patentee, especially in view of the change since the patent of the degree of degeneration in which the cassava starches now come on the market.* Treibacher vs. Chemical Co., 219 Fed., 210, 212; 135 C. C. A., 108. **In the Solva Case and the Michigan cases, most of the bases were not degenerated by step one of the Perkins patent or by any chemical reagent** but were starches already in their commercial state or by mixture with other raw starches in an equivalent stage of degeneration, and all those courts held the Perkins patent valid and infringed." (Italics ours.)

After pointing out that the testimony was conflicting as to whether the base came within the tests of the patent (it was conceded by plaintiff that it did not come within the 9 to 1 boil up test), Judge Cooper says:

"It is manifest that where the raw starch is procured on the market, already *sufficiently degenerated so as not to require the chemical treatment of the first step of the Perkins patent*, or where commercial starches of different grades and kinds may be mixed mechanically to produce the required degree of degeneration, *the defendants cannot with impunity use such base together with the other step of the Perkins process and obtain the Perkins glue.* This was in substance the holding in the Illinois and Michigan cases." (Italics ours.)

Judge Cooper then goes on to further point out:

"Moreover, the Perkins glue product being **the first glue produced from a vegetable base having all of the qualities of animal glue for wood veneering** and being the first vegetable base so used, **has such distinctive characteristics as to make it a clearly distinguishable product.**"

Accordingly, says Judge Cooper:

> "The patent may therefore be considered from the standpoint of its product claims apart from the process claims therein.
>
> In a product patent it is the duty of the Court to avoid, if it reasonably can, a construction confining it to the precise method of making it which the patent happens to show. Dunn Co. vs. Toronto Co., 259 Fed., 258, 261; 170 C. C. A., 326. It is very clear that the product claims are not restricted to the product made by the described process, but covers the chemical individual, however produced. Maurer vs. Dickerson, 113 Fed., 870, 874; 51 C. C. A., 494; General Electric Co. vs. Laco-Philips Co., 233 Fed., 96, 105; 147 C. C. A., 166."

And then, applying the law to the case before him, Judge Cooper said:

> **"Where the Perkins glue as described in the product claims (28, 30, 31) or its equivalent is in fact obtained as described in those claims, those claims are infringed regardless of the degree of degeneration of the base. The question of degree of degeneration or viscosity of the base is material only to the process claims (13 and 38) affected by the disclaimer."**

We submit Judge Cooper correctly stated and applied the law.

Judge Geiger's Decison in the Wisconsin Cases (280 Fed., 728).

The next cases to be decided involving this Perkins Patent were these cases before Judge Geiger. Up to this decision (May 3, 1922) **every decision had been in favor of the plaintiff**, Perkins Glue Co. The nature of the infringement before Judge Geiger was substantially the same as that before Judge Cooper and before Judge Sessions. Defendants

used the Kane base as did defendant Holland Co. in the case at bar.

The two cases against Gould Manufacturing Company, et al., and The Wisconsin Chair Company, et al., were tried together as one case. The trial began on April 26, 1922, and the testimony was concluded at noon the next day—Thursday, April 27, 1922. The plaintiff asked that a later date be set for argument, in order that plaintiff's counsel might have time to study the record and suitably prepare for the argument. This was refused by the Court, Judge Geiger insisting that the oral arguments be preceded with that afternoon, Thursday, April 27th; the result of which was that plaintiff's counsel were unable to give an adequate presentation of the facts as shown by the testimony (the record not having been then even transcribed) or of the law. Plaintiff's time for argument was only a little over an hour. At the conclusion of the arguments, on April 27th, plaintiff requested permission to file a brief, and especially permission to file a list of authorities, all of which was denied by Judge Geiger.

Judge Geiger at that time stated that he would be engaged with other matters on Friday and Saturday, April 28th and 29th. On May 3rd, 1922, Judge Geiger filed his opinion, and we have been informed that at the time the opinion was filed neither the transcript of evidence nor the transcript of the arguments had been filed.

Judge Geiger was the first to read into the product claims in suit the two step process, contrary, we submit, to the law as laid down by this Court. His reasoning, we believe, will not bear close scrutiny.

Judge Geiger Misinterprets the Solva Decision.

Judge Geiger refers to the concluding paragraph of the opinion of the 7th C. C. A. in the Solva Case where they say:

> "The decree of the District Court sustaining the claims * * * of the patent for the final process and resultant product respectively is affirmed."

Judge Geiger construes "resultant" as limiting the product claims to the two step process. We have hereinbefore pointed out that the 7th C. C. A. obviously used the term "resultant," not as a term of limitation, but as a term of identification to distinguish the product referred to (the final liquid glue), from the other product involved (the dry glue base) also called "glue."

Judge Geiger Misconstrues the Product Claims.

Judge Geiger said:

> "If the claims here in suit are thus all-embracing, then why disclaim from any of the process claims?"

and

> "if, as claimed on rehearing, the degeneration may take place or may be obtained by 'intermixture' with other ingredients, then again, why the necessity of claims 10, 12 or 13, why the necessity of the more specific two-step claims."

We are frank to say that we can not see any sense to his proposition. If the product claims are all embracing, what has that got to do with another invention (process claims) which may not be all embracing? We submit the one has no bearing upon the other.

Judge Geiger might just as well have said: "If the product claims in suit are thus all-embracing, why have any process claims at all?" In other words, his theory is that if you claim the product and then also claim your preferred process for making that product, you thereby limit your product claims to a product made only by that particular process; else why have any process claims at all? If your product is covered, no matter by what process it is made, you do not need any process claims, and if you put them in that shows you intended to cover the product only when made by that process.

If this is good law, it means that hereafter a patentee is not justified in putting in claims of different scope, is not

justified in claiming both the process and the product, because if he claims the product and also claims his particular process of making that product, then by claiming his particular process he limits his product claims so that his patent will not cover the product when made by any other process, no matter whether equivalent or not.

Judge Geiger's reasoning is not supported by any authorities, is a novelty in patent law, and is contrary to all precedent.

Judge Geiger Misapplies the Disclaimer.

Judge Geiger goes on to say:

> "If, for example, the product of Claim 28 may be made by the processes noted in claims 10, 12 or 13, then why disclaim from the latter 'any process of making glue excepting where the starch or starchy product is degenerated to the extent described * * * *whereby* the process results,' etc. Surely the disclaimer indicates that if glue, made according to the processes broadly described in claims 10, 12 and 13, resulting in making the product noted in claim 28, then Perkins will not claim it unless the starch *subjected to the process* is degenerated to the extent described."

We submit the disclaimer does not indicate anything of the kind. **The processes which the 7th C. C. A. thought were broadly described in process claims 10, 12 and 13 included, not only the process for making the Perkins veneer glue, but also processes which the Court found old in the making of sizes, pastes, etc.** We submit that the Court did not consider these process claims sufficiently definite to distinguish the process from the old processes of making pastes and sizes. The disclaimer simply limited the process claims to exclude these old processes, and limited them to Perkins' preferred process using a base degenerated to the extent described in the patent. The very fact that the disclaimer did not include, and thereby implicitly excluded, the product claims 28, 30 and 31, shows that there was no intention to limit the product claims; and, as matter of

law, there could be no limitation of the product claims by the disclaimer as we will hereinafter more fully point out.

Judge Geiger, however, says:

> "And when, therefore, the plaintiff in this case conceded, at the opening, that the defendant's base was not within the reservation of the disclaimer, it conceded—in connection with the clear proof in the case—that the defendants in making their glue were in the disclaimed field."

Defendants' *base* in the case before Judge Geiger may not have been within the reservation of the disclaimer—their process may have been different from Perkins' preferred two-step process but their final glue product was concededly the same, and was not in the disclaimed field. Judge Geiger went on to say:

> "It would be simply paradoxical to allow that after exempting to the public the right thus to process (see for example claim 10) **every** resultant product was still within the protection of claim 28."

The trouble with this is that the plaintiff did not exempt to the public "every resultant product. It did not exempt to the public the right to process as described in Claim 10 and obtain the good as animal veneering glue from starch, but only the right process as described in Claim 10 **when the resultant product was something different,** as for example, a size or paste or the like. If process claim 10 had been cancelled altogether, it could not be legitimately said that plaintiff disclaimed everything and that defendant had the right to make the product claimed in the product claims which were retained and held valid. The failure to perceive this distinction was another of Judge Geiger's fundamental errors in law in the case.

Judge Geiger Misconstrues the Result in the Solva Case.

Judge Geiger says:

> "If the result in the Solva Case is not as Judge Sanborn states it; if, notwithstanding the language of the Court, any starch glue, good-as-animal glue, is within the Perkins monopoly, then the entire patent, as Judge Sanborn considered and upheld it, is now reclaimed, not only from the decree of the Appellate Court but also from the plaintiff's express disclaimer."

This proceeds, first, on the erroneous theory that the 7th C. C. A. held the starch glue as good as animal glue old and unpatentable; and, second, that plaintiff disclaimed the starch glue as good as animal glue, as a product; whereas, we submit, the fact is that the Appellate Court did not so hold, as we have previously explained, but, on the contrary, held it to be new and patentable, and the plaintiff did not disclaim such glue but merely limited certain process claims without limiting the glue product claims.

Judge Geiger was unable to distinguish between process invention and the glue product invention. He could not grasp the fact that there were two or more inventions covered by separate groups of claims. He ignores the law as laid down by this Court in Rubber Co. vs. Goodyear, discussed hereinafter. He treats the whole patent as being merely for the Perkins preferred process, for he next says:

> "True, in considering two-step processes, it is entirely proper to assert that an alleged infringer equivalently followed one or the other step. But after the Court of Appeals expressly held that each step per se was old, that *their combination exhibited the patentable novelty,* it was no longer possible for Perkins to claim that *each step* equivalently comprehended the other."

Judge Geiger in his haste and under pressure of work, evidently did not examine the *Solva* record, a copy of which was left with him, because he would have found that most of the Solva Company's base was not degenerated by chemicals, but was raw starch just as it came on the market, and was used to make glue by the Perkins second step without first giving the base any first step treatment whatsoever.

Yet the Circuit Court of Appeals in the Solva Case nowhere holds that this is not an infringement. **Judge Geiger does not assume to find that there was any difference between the defendants' glue and the glue of the patent.** Judge Geiger's decision is based on the erroneous assumption that his own Circuit Court of Appeals limited the whole patent, not only the process, but the product claims as well, to a glue made by the specific two-step process.

Judge Geiger Had an Erroneous Idea Regarding the Law as to Anticipation.

Judge Geiger says:

> "Plaintiff's witness, Grosvenor, admitted, though somewhat reluctantly, that though his experimental use of Gerard or Dornemann gave an unsatisfactory product, he would not deny that had he practiced such processes by using **defendant's** base, he would have had defendant's glue as a resultant."

In the course of the cross examination of Dr. Grosvenor before Judge Geiger, the following occurred (p. 172):

> "Court: Then you do not conclude, Doctor, that you made a test which excluded the possibility of Marsden's method being practiced so that there could be a resultant veneering glue?
>
> A. May I inquire, Your Honor, what is meant by Marsden's method?
>
> Court: His disclosure. You did not take Marsden and try out the varient hypotheses that he suggests in his specifications?
>
> A. No.
>
> Court: Well now, to begin with, are you ready to tell us what might have been the result, following Marsden, taking Kane's vegetable glue, if that is what it is called, as a beginner, and made variations such as Marsden suggests in respect to the quantity of water? You are not prepared to say that you might not have gotten a very strong glue, available for veneering purposes?

A. I might *not* had I gone through the range of experiments."

Now "hypotheses" are mere suppositions, things not proved, and the word has no application to Marsden's specification, but the witness evidently thought the Court was referring to Marsden's statement to the effect that the proportion of water might be varied from the 7 parts specified, and that the Court was asking him if he had tried *all* proportions of water. To this the witness, of course, answered, "No." Dr. Grosvenor had tested Marsden with the 7 parts of water specified by Marsden and obtained a product having the characteristics described by Marsden. This product was found to be entirely different from Perkins and defendants. **There was no suggestion in the Marsden patent that any different product such as veneer glue could be obtained if the proportion of water was reduced from 7 to 3 parts** and the witness was, therefore, not justified in testing out Marsden with any such proportion.

The last question asked by Judge Geiger is self-contradictory for it first assumes that Marsden's description is to be followed and then assumes the Kane base is to be used. Marsden's description does not say anything about the Kane base or any other similar base, but the witness was forced to assume that he was to take the Kane base and dissolve it in various proportions of water and state whether he would have gotten a veneer glue, and the witness answered that even under such unwarranted assumptions he "might not" have gotten it. If he did not use the critically small amount of water and did not continue the stirring with heat after the caustic had been added and dissolved the Kane base, he might very well not have gotten it.

Dr. Grosvenor was further questioned by Judge Geiger, as follows (p. 183):

"Suppose a man has before him Gerard, Dornemann and Marsden, as witnesses here testified yesterday, and

they take Kane's vegetable glue and start out to mix and to agitate, and they have a resultant product which we will assume is suitable for veneering purposes, or is a strong glue. What is there in Perkins, when you get away from the specific formula that he points out, that enables you to say that these workers followed Perkins rather than the patents that were before them?

A. The indications of the desired end to be sought, and the application of the material to that end; the proportions of water desirable to use, and the adaptation of the conditions of mixing, or the degree of starch, the kind of starch selected, preferably cassava, to the end to be obtained.

Court: Which of those things enumerated are **forbidden** by the three guides that these workers had before them?

A. I think none of them is forbidden.

Court: Well, is any method that they pursue, forbidden?

A. I think none is forbidden, although suggestions to the contrary are frequently made."

According to Judge Geiger's theory if a prior patent says, "By taking suitable ingredients and varying proportions I can make anything under the sun," then that patent is an anticipation of everything. He seems to have thought that if the prior art does not "prohibit" or "forbid" the alleged invention it must be anticipation thereof. But anticipation is to be determined not by what the prior art *prohibits* or *forbids* but by what it **discloses**. A prior reference to defeat a patent must point out the subject matter claimed by the patent in such unmistakable manner as to enable those skilled in the art to recognize and utilize it.

Judge Geiger further says:

"Therefore, it is not possible, after crediting Perkins with discovering a correct formula, one that is 'just right' to assume that every formula which he discarded and, that every product made by a discarded formula, is none the less within the monopoly; nor to extend the latter over products resultant upon the practice of Gerard or Dornemann, even though

the later failed or were not interested in apprehending, the efficacy of their processes to produce a veneering glue satisfactory to others than to Perkins."

The product claims do not cover every product made by a discarded formula. Nor is it contended that any discarded formula is within Perkins' monopoly. The discarded formula (broad process claim) was one which was so vague and general that many different things could have been made thereunder, not only veneer glue, but also thin watery sizes and pastes. We have pointed out that such formulae were discarded as **might** make something beside a vegetable veneer glue. Likewise, plaintiff did not attempt to extend its claims over the products resultant upon the practice of Gerard or Dornemann; the practice of Gerard and Dornemann results only in relatively watery sizing materials; but when (as defendants did there and defendant does here) one changes Gerard and Dornemann in ways not specified in the Gerard and Dornemann patents, and thereby obtains the good as animal glue for veneering first discovered by Perkins and not attained or contemplated by Gerard and Dornemann, then we contend such a one is no longer making the Gerard and Dornemann product but is making the glue product of the patent in suit.

Decision of Second C. C. A. in the Standard Furniture Co. Case (287 Fed., 109).

This was the next decision rendered affecting the patent in suit. It was on defendants' appeal from Judge Cooper's decision hereinbefore discussed.

The decision of the 2nd C. C. A., while professedly following the decision of the 7th C. C. A. in the Solva Case, is, we submit, like the decision of Judge Geiger, directly opposed thereto. The 2nd C. C. A. was undoubtedly greatly influenced by Judge Geiger's opinion and **similarly misinterprets the Solva decisions.**

The Second C. C. A. say (287 Fed., 110):

"Sanborn, District Judge, upon receipt of the mandate in the Solva Case, ruled that only those claims remained valid after the decision of the higher Court which included the two steps (of the process) and only when their use results in Perkins' glue, together with such additional claims as count on such glue as a product of the two steps and no others," i. e., no other claims.

As previously pointed out this statment of Judge Sanborn was not a statement of limitation of the product claims (which claims he was not called upon to construe) but a statement of reference to distinguish the **final glue product** claims from the **intermediate base product** (called glue) claims, which base was the product of the first step.

The 2nd C. C. A. Errs as to Law Respecting Plaintiff's Right to Appeal.

The Second C. C. A. say:

"We are not advised that any appeal was ever taken from this interpretation of the ruling of the Circuit Court of Appeals" in the Solva Case.

But the product claims were the only claims plaintiff particularly cared about and the decree held those valid and infringed as plaintiff had prayed in its bill of complaint. Plaintiff could not appeal from such holding in its favor, no matter what Judge Sanborn's reasons were for holding them valid. No appeal lies from a Court's *opinion and reasoning.*

The 2nd C. C. A. misconstrued and misapplied the disclaimer.

The Second C. C. A. say:

"Subsequently to such ruling, however, this plaintiff disclaimed, inter alia, from claims 13 and 38 of the reissue, 'any process of making glue excepting where the starch or starchy product or carbohydrate subjected to the process is degenerated to the extent described in' the reissue. For this procedure, see 280 Fed., 729, 730," i. e., Judge Geiger's opinion.

They, like Judge Geiger, assumed that the disclaimer applied to the product claims 28, 30 and 31, as to which no disclaimer was filed. The absurdity of the assumption is more fully discussed hereinafter.

The 2nd C. C. A. errs as to the law.

The Second C. C. A. finds that the defendants so-called raw starch base there used (like defendants' base here) "is the exact equivalent of what Perkins made by his first process" but they say:

> "This product of nature cannot, per se, be covered by any patent, and it certainly is not the result of any process devised by Perkins."

Here the 2nd C. C. A. seems to have been under the impression that it was the base which plaintiff was claiming as the invention. They go on to say, however:

> "if we accept the decision in the Solva Case as interpreted by Sanborn, J., and apparently acquiesced in by plaintiff, there can be no infringement, because this defendant is not using a glue which is the result of both steps of Perkins' patent."

This is nothing more than reading into the glue product claims, the features of the two step process. The facts there and here did not warrant any such **mutilation** of the claims by construction and the patent law does not provide for any such twisting of a claim from a claim to a defined product into a claim for a product made only by a two-step process which process is in no way referred to in the claim. We will discuss this more in detail hereinafter.

The Second C. C. A. further says:

> "In our opinion this record shows that some accident of nature, or the skill of agriculturists, has produced and put on the market a cassava starch of that degree, of viscosity, etc., which Perkins achieved by his degenerative process. With such a starch, defendant, by using methods as old as Gerard, has produced a sub-

stance which plaintiff says is Perkins' glue. Perhaps it is in result; but it cannot be the same thing in a patentable sense, because **nature has supplied the base** and Gerard the process."

This is absurd, for it is well recognized that if one combine two features (separately old) to produce a new result, it is patentable.

Inasmuch as in the Solva Case the Court held that the **base** was old as found in prior patents; certainly no difference was there predicated on the base, and what difference can it make whether the base was unpatentable because found in a prior patent, as found in the Solva Case, or because found in nature, as stated by the 2nd C. C. A. (also in the Solva Case)? In each case the base is lacking in novelty. It seems to us an absurdity in law and in fact for the learned Judge of the Second Circuit to say that the novelty of the **glue** product could be affected in any way because of the fact that the base from which it is made is found to be old in nature as distinguished from being found to be old in the prior art as a manufactured product. The learned judge found "**we agree that Perkins disclosed a new vegetable glue**, i. e., a manufactured product," but he limits the product claims to a product made by two commercial processing steps because he finds that the intermediate product resulting from the first of those commercial processing steps is a product to be found in nature.

We submit that there is no authority or foundation in law or in fact for any such reasoning or conclusion and we respectively submit that it is an absurdity on its face. Why should a patentee whom the learned Judge concedes produced a new kind of glue (novel in itself) by two manufacturing process steps be denied the monopoly of that identical product because in the light of his teachings to the art, nature or the farmer has been able to deliver to manufacturers, the base to which the second manufacturing step is applied to produce that product so that they are not required to carry out the first step.

Anyway defendants, in the 2nd C. C. A. case, did not use Gerard's method or any other method disclosed in the prior art. Like defendants here they used less than 3 parts of water, instead of over 5 parts of water as specified by Gerard.

The 2nd C. C. A. says:

> "The only reason that ever justified any Court in holding Perkins' product patentably new was by finding it the peculiar result of a combination of two processes severally old."

As previously pointed out a careful study of the decision in the Solva Case (referred to) in the light of the facts, shows that the Solva decision did not hold the product patentably new because it was the result of a combination of two processes severally old, but because of the difference in the amount of water which produced a materially different glue.

The 2nd C. C. A. found that the Standard Furniture Company's base "is a natural product," one which "some accident of nature, or the skill of the agriculturalists, has produced and put upon the market" "of that degree of viscosity, etc., which Perkins achieved by his degenerative process"; and the glue which the defendant made therefrom the Court assumed to be not only **"the equivalent of Perkins' product,"** but the "same thing." Under such a state of facts the law is that there is infringement and the 2nd C. C. A. erred in holding no infringement.

The 2nd C. C. A. go on to say:

> "There are some manufactured products so broadly new that the **same thing** however produced may be within the inventions broad range of equivalents. This is a question of fact; but, on the prior art and the evidence herein as to modern cassava starch Perkins' vegetable glue is not such a product."

The learned Judge of the Second Circuit here assumed that defendants' glue was the **same** as Perkins and yet did

not come within the patent, not because that glue was old or did not involve the invention, but on the ground that **one of the ingredients** from which it was made may be found in nature. It seems to us absolutely absurd to say that it makes any difference whether the base was old in nature or old in the prior art as a manufactured product (Gerson & Sachse). On the same reasoning the absurd result is reached that the **patent can not cover the glue made from the Perkins degenerated base,** because that preliminarily artificially degenerated base was old in Gerson & Sachse.

We submit that the decision of the 2nd C. C. A. is totally lacking in logic and is unsound on every point.

The Decision of the Seventh C. C. A. in the Wisconsin Cases (292 Fed., 596).

This was on plaintiff's appeal from Judge Geiger's decision hereinbefore discussed. While the appeal was heard in the same Court which heard the Solva Case appeal, none of the Judges were the same.

The 7th C. C. A. misconstrues the Solva decision.

After referring to the decision of the Second C. C. A. they say:

> "Though the decision in the Solva Case is not res adjudicata between the present litigants, we find no difficulty in following it on the principle of stare decisis. After reversing that part of the decree which sustained the claims for a glue base process and product and for the so-called second process as such, the mandate reads:
>
> > 'And that part of the decree which upholds the claims of the patent for the final process (that is, the combination of the processes numbered 1 and 3 above) and the resultant product respectively is affirmed.'
>
> It seems to us that the Court intended to limit the valid product claims to the product that resulted from practicing the valid process claims. Such was the in-

terpretation put upon the opinion by Judge Sanborn when the case was returned to his Court to execute the mandate."

It has been already pointed out that the use of the term "resultant" by the C. C. A. in the Solva Case and the equivalent expression by Judge Sanborn was not by way of limitation, but for purposes of reference merely, i. e., to distinguish the final glue product (referred to as the resultant of the two steps) from the *base* product which was the resulant of the first step (the term "glue" being applied in the trade to both products).

We submit that the Seventh C. C. A. in the last case simply misconstrued the decisions in the Solva Case.

The Court Misapplies the Disclaimer.

The Seventh C. C. A. in its later decision then goes on to say:

> "Following the final decree of Judge Sanborn, appellant filed in the Patent Office a disclaimer of all the claims for the glue base and all the claims for the process of making the glue base; and appellant further disclaimed 'from claims 9, 10, 11, 12, 13, 14 and 38,' which cover the second process, 'any process of making glue excepting where the starch or starchy product or carbohydrate subjected to the process is degenerated,' by use of the first process, 'to the extent described in the said patent.' In our judgment this disclaimer is a conclusive bar to appellant's attempt to monopolize a product, which does not depend at all for its existence upon the use of appellant's valid process claims."

It seems to us simply absurd to say that this disclaimer from process claims 9, 10, 11, 12, 13, 14 and 38 was in fact a disclaimer from the product claims 28, 30 and 31 which product claims were not mentioned in the disclaimer in any way. Of this more hereinafter.

The Seventh C. C. A. next says:

> "In addition to the foregoing reasons, we may say that our view of the prior art leads us to the conclusion

that the only patentably novel thing that could be attributed to Perkins' labors was the combination of two processes which severally were old, and that no product claims could validly be given a broader sweep of monopoly than inheres in the combined processes."

The Court cited no prior art sustaining this conclusion, and we believe there is none. As previously pointed out the "combination" idea was old in Gerson & Sachse. It was the use of the **critically small amount of water** with a suitable starch which resulted in the new good as animal glue for veneering, and this whether the glue was made by two steps or one step.

Judge Sessions Reopening and Reversal of His Prior Decision.

After the coming down of these decisions by the Second C. C. A. and Seventh C. C. A. the defendant in this case moved to reopen the same, because of these decisions and also for the purpose of introducing the Gerard Belgian Patent in evidence. The Gerard patent, as before pointed out discloses the old "apparatine" formula for making a size. The same "apparatine" was before the Courts in the Solva Case in the form of the corresponding British Patent and another publication. Judge Sessions granted the motion to reopen and after an oral hearing in which he expressed the opinion that he should now follow those decisions, he entered a final decree (Rec., 637) holding **defendant's Solva and International glue to be infringing**, but holding the **Kane base glue to be non-infringing**, thereby reversing his previous decree which held the Kane base glue to be an infringement. It was from this final decree holding the Kane base glue to be non-infringing that plaintiff appealed to the 6th C. C. A. below.

While Judge Sessions, in his final decree was attempting to follow the recent decisions of the 2nd and 7th C. C. A.

the said decree is, in effect, at variance therewith in the following respect.

The recent decisions of the 2nd and 7th C. C. A. say there can be no infringement unless the glue is made by the two step process (a first starch degenerating step and a second starch dissolving step). Judge Sessions, however, held the glue to be an infringement which was made from the International Process Co. base, which base was not degenerated by the Perkins first step but was a mixture of starches. Defendants did not appeal from this ruling.

ARGUMENT.

The Product Claims in Suit are Neither Anticipated nor Limited by the Prior Art and Defendant's Doings are not Justified by the Prior Art.

It is plaintiff's contention that Perkins was the first to discover (1) that from starch there could be made a glue having the essential properties of animal veneering glue, and (2) that such a glue could be composed of starch not degenerated as far as soluble starch or dextrine, dissolved with caustic, in the critically small amount of water, i. e., about 3 parts or less.

Others had dissolved **soluble** starch and **dextrine** in about 3 parts or less of water and obtained only a weakly adhesive mucilage or paste. Others had dissolved starch not degenerated to soluble starch or dextrine in a much **greater proportion** of water (from 5 to 20 parts) and obtained ony a weakly adhesive size for cloth finishing and the like.

Before Perkins no one had combined the critically small amount of water (about 3 parts or less) with a non-dextrinized or non-solubilized starch. Perkins did this and was the first to obtain a starch glue having substantially the adhesiveness, cohesiveness, spreadability and other essential properties of animal veneering glue.

The glue of the patent is clearly differentiated from the prior art by the characteristics (1) that it is a starch glue having substantially the properties of animal veneering glue, (2) that it is a wood glue formed of starch by union therewith of about 3 parts or less of water and caustic, (3) that it is a wood glue containing starch as a base dissolved without acid in about 3 parts or less of water and being viscous semi-fluid and unjellified. These differentiations are specified in the claims in suit.

We submit all these characteristics are concededly present in defendant's glue in question.

We also understand defendants' counsel to concede that the prior art does not anticipate, but such concession is based on their unwarranted mental reservation that the product claims cover the product only when made by the Perkins **preferred process,** using as a base a starch first degenerated to a point to respond to all the so-called tests (for the base) mentioned in the patent. In this way, **they seek to avoid the appearance of raising an issue of anticipation and to take on the appearance of raising only an issue of infringement; but on a normal and usual interpretation of claims 28, 30 and 31, infringement is clear and defendant's attempted justification of its product by the prior art is an issue of anticipation pure and simple.**

It may be quite true that the defendant follows the prior art to some extent, but it is only in so far as it uses starch, caustic and water to produce an adhesive, for defendant uses a starch not degenerated to soluble starch or dextrine and dissolves this with caustic in about 3 parts of water or less and such a glue is not suggested by the prior art. Gerard, Dornemann, etc., used proportions to produce a watery sizing material or a paper paste. Defendant uses specifically different proportions and conditions and produces a radically different product, i. e., veneer glue, like Perkins.

Defendant contends that it uses a base not degenerated to respond to the 9 to 1 boil up test and 170° test and

that Gerard, Dornemann and Marsden also made an adhesive from starch not degenerated to respond to the 9 to 1 boil up test and 170° test, and therefore it is doing what the prior art directs and is free of infringement. On the same erroneous theory it might be as truly said that Gerson & Sachse disclosed an adhesive made from a base degenerated to within these tests, and, therefore, the patent can not legitimately cover glue made from Perkins' preferred base. *Defendant's argument, therefore, can only lead to the conclusion that there is nothing patentable whatsoever in the patent in suit; and indeed that is the logical conclusion of the reasoning found in the recent decisions of the 2nd C. C. A. and 7th C. C. A.*

It is, of course, conceded that defendant is not using exactly either Gerard's sizing with five parts of water or Dornemann's even more watery sizing. It appears to be defendant's contention, however, that if it substantially changes the proportion of water, using one-half as much as Gerard suggested and one-fifth or one-sixth as much as Dornemann assumed, and adjusts the conditions of mixing, etc., it is still following Gerard and Dornemann and getting their product, and, in support of this, it urges that Dornemann mentions no specific amount of water and that Gerard states that the proportions may be varied, although Gerard specifically says that "in order to obtain an industrial and commercial product *it is necessary not to depart too much* from" the 5 to 1 proportions, which is almost twice too much.

We submit it is absurd to say that defendant is following prior patents unless it makes substantially the same adhesive product which the prior patentees sought and intended and described. Since they all described a watery sizing adhesive or paste and since defendant does not make or use any such adhesive but on the contrary makes and uses a wood veneer glue having entirely **different characteristics and unexpected properties**, constituting not merely differences in degree but differences in **kind**, the defendant cannot fairly or properly say it is following the prior art.

Defendant would have us believe, for example, that because Dornemann mentioned no specific proportions, he thereby anticipates everything, that could or can ever be made from starch, alkali and water, no matter how unexpected or how useful or how novel the result and whether an old art is revolutionized or not or a new art begun.

We submit, such a line of argument is absurd. **Defendant cannot rely on the omissions and indefinite statements in prior patents either as anticipations or as justifying their own acts.**

In the case of Eames vs. Andrews, 122 U. S., 44, 30 L. Ed., 1064, the often-cited driven well case, this Court had before it a large number of patents and publications alleged to anticipate the patent in suit. It sustained the patent, however, quoting from its prior decision in Seymour vs. Osborne, 78 U. S., 516, the following language:

> "Mere vague and general representations will not support such a defense as the knowledge supposed to be derived from the publication must be sufficient to enable those skilled in the art or science to understand the nature and operation of the invention and to carry it into practical use."

This doctrine has long been followed by the District Courts and Circuit Courts of Appeal. For example the Court in Warren vs. Owosso, 166 Fed., 309, 92 C. C. A., 227, said:

> "The patents relied upon as anticipations * * * are both lamentably lacking in instruction as to the *proportions* of mineral ingredients of the different grades. * * * Mere *vague and generel representations* in a foreign patent will not support the defense of anticipation." (Italics ours.)

In Westinghouse vs. Saranac, 108 Fed., 226, the Court had before it the Stanley transformer patent, and said with regard to prior art publications alleged to anticipate a patent claim, that they must be so complete in details as

not to require "independent investigation and experiment" "to explain obscurities and supply omissions."

In Hess-Bright vs. Standard, 177 Fed. Rep., 437, the Court said (citing McMichael & Wildman vs. Ruth, 128 Fed., 706, 63 C. C. A., 304; 3rd C. C. A.):

> "The fact that an expert, with a patent before him, might be able to build up the structure covered thereby, by selecting and adapting appliances theretofore known, does not overcome the presumption of invention arising from the granting of the patent, where neither the same combination in its entirety nor the same mode of operation, had previously been described or known."

And the Court in Westinghouse vs. Great Northern, 88 Fed., 258, 263, 31 C. C. A., 525 (2nd C. C. A.), said:

> "• • • The prophetical suggestions in English patents of what can be done, when no one has ever tested by actual and hard experience and under the stress of competition the truth of these suggestions, or the practical difficulties in the way of their accomplishment, or even whether the suggestions are feasible, do not carry conviction of the truth of these frequent and vague statements."

We submit that the 6th C. C. A. below, correctly disposed of the matter where they said (Rec., 652)

> "If the right of a prior inventor to vary proportions, sizes and relations in his article as much as he pleases barred a patent to a subsequent worker who did make the variation which the first man had not done, many familiar decisions are wrong. In the Minerals Separation case, 242 U. S., 261, and 250 U. S., 336, the earlier inventors had used oil in varying quantities, and had the right to use less than one per cent. The patentees first observed that with less than one per cent. they got a much better result. Eibel's predecessors (261 U. S., 45) had flowed the fluid paper pulp down a screened incline with an elevation of three inches. He

raised the upper end nine inches, making the incline twelve instead of three, and thereby made as good paper at a faster rate. He did not merely observe that the steeper the hill the faster water would run down it; he saw that an existing trouble would be cured by a faster flow. So with Perkins. He did not merely observe that if he used less water than Gerson and Sachse he would get a thicker paste; he saw and developed the reason why he could use a very little water, and get something never before obtained,—a starch-base wood and fiber glue. His conception and development of the interactions of his selected starch base and the alkaline solvent with the water minimum, and his creation thereby of a new product following years of commercial need for and unsuccessful effort to devise such a product, followed by the general adoption by the industry, seem to us to meet and satisfy the universally accepted tests of invention."

The rule of law as to prior art references is even more strictly applied in the case of chemical patents.

In Naylor vs. Alsop, 168 Fed., 919; 94 C. C. A., 315 (8th C. C. A.), the Court said:

> "It should also be borne in mind in considering this subject that reasoning by analogy in a complex field like chemistry is very much more restricted than in a simple field like mechanics. This distinction has been frequently recognized by the Courts."

The Court in Kuehmsted vs. Elberfield Co., 179 Fed., 701; 103 C. C. A., 243 (7th C. C. A.), discusses the impossibility of chemists predicting what a product of a process will be.

General Co. vs. Laco Co., 233 Fed., 103; 147 C. C. A., 166 (2nd C. C. A.); adopting Judge Mayer's opinion:

> "Chemistry is essentially an experimental science, and chemical prevision is as impossible to-day, in spite of the accumulation of the great knowledge, as it was in former times."

The 6th C. C. A. discussing whether there was invention in taking this known starch base and dissolving it in the critically small amount of water with caustic, held that there was, saying (Rec., 652):

> "Patents are commonly granted, and sustained, for just that type of selecting and uniting mechanical elements, when they bring a long-sought and strikingly useful result which gets wide acceptance and use. *Much more should it be so with chemical reactions, often not fully foreseen.*" (Italics ours.)

Perkins' Change in Water Proportions was not a Mere Difference in Degree.

It was not a mere difference in degree because he obtained a **new product** (new in kind), a starch glue having the essential properties of animal veneering glue, which was not known before, and this new product was new in and of itself and revolutionized the veneering industry by substantially supplanting animal glue therein. Perkins' **process** may have differed from prior processes mainly in degree (amount of water) but the **product was different in kind** for it is not usable for the purposes for which the prior art products were used and they are not usable for veneering.

Walker on Patents (5th Ed., p. 58, Sec. 41a):

> "For example, Charles Goodyear invented soft vulcanized rubber, consisting of crude India rubber and sulphur in the proportion of one part of sulphur to five parts of rubber, mixed and subjected to a high degree of heat; and afterward Nelson Goodyear invented hard vulcanized rubber, consisting of equal, or comparatively equal, parts of sulphur and crude rubber mixed and subjected to a high degree of heat. In this case, the change in proportion of the two materials resulted in two entirely distinct articles, having entirely distinct modes of operation and functions; and the later article was well held to be an invention."

Similar alleged differences in degree have been sustained as patentable by this Court. Eibel Process Co. vs. Paper Co., 261 U. S., 66, 67; 67 L. Ed., 534.

This doctrine has likewise been long followed by the lower courts. For example in Toledo Computing Scale Co. vs. Computing Scale Co., 208 Fed., 410; 125 C. C. A., 622; (7th C. C. A.) the Court held the patent valid and infringed, saying:

> *"Defendant insists, however, that making the drum lighter was merely a matter of degree. Of course the lessening of weight is a matter of degree; but it is not necessarily merely a matter of degree.* **If the change converts failure into success, something more than a matter of degree is involved.** Unreliable automatic computing scales, in the practical art, are no scales at all. A reliable automatic scale was a new mechanism, a creation, just as in the Asperin case (Kuehmsted vs. Farbenfabriken of Elberfield Co., 179 Fed., 701, 103 C. C. A., 243) this Court held that *the reduction of the amount of impurities in a compound theretofore known to chemists, whereby a deleterious substance was converted into a valuable medicine, was not merely a change of degree, but was a change of kind, producing a new article of commerce."* (Italics ours.)

If the difference in product resulting from the difference in amount of water had been a mere matter of degree, we submit the Court would (in the Solva Case) have held all the finished glue product claims (including 28, 30 and 31) invalid because it held that that was the only difference over the Gerson & Sachse patent, which patent disclosed a starch base degenerated, as they held, to the same stage as Perkins, but which, however, was dissolved in 20 parts of water with caustic to make a sizing instead of 3 or less parts of water to make veneer glue.

From the knowledge in 1908 (when the Perkins application was filed) of the complexities of starch chemistry and the multitudinous products that may be produced therefrom, it was far from obvious to those skilled in the art

that, by changing the proportion of water from those mentioned by Marsden, Gerson & Sachse, Gerard or Dornemann, a new product could be produced from any starch, which product would have substantially the adhesive power and other essential properties of animal veneering glue, as distinguished from sizes, pastes and the like.

Defendant, we believe, admits that the prior art patents relied upon do not *specify* the Perkins critically small amount of water (about 3 parts or less) but as to this they say they are entitled to use **their** "judgment"—but in truth it was **Perkins'** judgment and Perkins' invention based thereon that they were using to reduce the amount of water used by the prior patentees until it is like Perkins, and until they get glue like Perkins and unlike that contemplated by the prior patentees; and when they thus, get Perkins veneer glue by making these changes and departures from the prior art, they say they are still operating according to the disclosures of this prior art and not according to Perkins.

The law, we submit, is well settled to the contrary.

A Prior Patent to Anticipate or Limit One of Later Date Must Do so Without Assistance from the Latter.

In Johns-Pratt Co. vs. Snow, 212 Fed., 173, 176, the Court said:

> "The rule is well established that a prior patent to anticipate one of later date must do so 'wtihout assistance from the patent' alleged to be anticipated."

Citing Cohn vs. U. S. Corset Co., 93 U. S., 366; 23 L. Ed., 907, where this Court said:

> "Unless the earlier printed and published description does exhibit the later patented invention in such a full and intelligible manner as to enable persons skilled in the art to which the invention is related to comprehend it without assistance from the patent, * * * it is insufficient to invalidate the patent."

This doctrine has likewise been followed in many cases. For example the Court said, in Ludwigs vs. Payson Mfg. Co., 206 Fed., 60, 64; 124 C. C. A., 194 (7th C. C. A.):

> "The Thompson patent is not an anticipation; and this virtually is confessed by Ludwigs' reliance on Thompson modified by omitting the catch.
>
> But the modified Thompson structure is not a part of the prior art. Topliff vs. Topliff, 145 U. S., 156, 161, 12, Sup. Ct., 825; 36 L. Ed., 658. It has been produced in the light of Payson's teachings. It is a subsequent art brought into being in the endeavor to defeat Payson. * * *"

The Court said in the Aspirin Case, 171 Fed., 887, 889 (affirmed 179 Fed., 701):

> "In other words, they added Hoffman's discoveries to those of the prior art in order to attempt to demonstrate that such art contains everything discovered by Hoffman." But **"It was he** (Hoffman) **and not** Kraut (prior patentee) or **the other famous chemists of the prior art who gave to the world this valuable remedy.** That the law is with the complainant from the facts stated seems to me to be clear." (Many cases cited.)

It remained for Perkins, after tireless effort, to produce this new glue product for the trade. It was badly needed in the trade, yet neither Kane who spied on Perkins' factory and who is back of the defendants here, nor anyone else, was able to produce any vegetable veneer glue from the teachings of the prior art. It was only after Perkins' disclosures that they were able to produce it by **any** method. Why at that time could they not get it with their "judgment?" The answer is simple. Perkins' discovery had not been disclosed to them.

Under the Law the Product Claims Should Not Be Limited to the Process Described.

To do so would be a grave injustice, for **it is the product that the public is interested in,** and not the process. Also we submit the law is settled that no Court has a right to alter the patent grant. The patent is a contract between the Government and the patentee. The contract was made between Perkins and the Patent Office, and no one can doubt that these product claims, when the patent was granted, were intended by both parties to cover the product irrespective of the two-step process and irrespective of the particular base Perkins preferred to use. The two-step process and the different steps and the base were claimed in separate claims. Yet the 2nd C. C. A. and 7th C. C. A. have deliberately read into the glue product claims, process features which are not there and which were never intended to be there. This is contrary to well settled law.

This **Court** in McCarty vs. Lehigh Co., 160 U. S., 110, 116; 40 Law Ed., 358, 361, said

> **"we know of no principle of law which would authorize us to read into a claim an element which is not present, for the purpose of making out a case of novelty or infringement."**

We submit this is axiomatic.

The *words* in a claim may be interpreted where they are reasonably capable of different interpretations in order to determine what the language means, but we submit elements or features not referred to in a claim can not legitimately be read into the claim for any purpose. This rule, laid down by this Court has been followed in many cases.

Defendants' attempt to read into the glue product claims limitations as to the base, makes these claims of the same effect as the narrower process claims. This is not legitimate.

In Mast, Foos & Co. vs. Dempster Co., 82 Fed., 327, 333; 27 C. C. A., 191 (8th C. C. A.), the Court said:

"Any construction which would read into the first claim these additional elements renders it useless and unmeaning, because it gives it the same effect as the claims which follow it, and in this way shows that neither the patentee nor the patent office contemplated such an interpretation. The appellee has appropriated the essential feature of this invention—the internal toothed spur-gear in combination with the pinion, pitman, wind-shaft, and pump-rod of a windmill. The terms of the first claim of the patent are plain and unambiguous. They need no construction, and, when taken in their ordinary signification, they fully describe and clearly claim the combination which the appellee is using. It ought not to escape here, because it does not use subordinate or unimportant elements of combinations described in other claims, which are undoubtedly omitted from this claim that the inventor might more perfectly secure the essential element of his invention. Manufacturing Co. vs. Wharton, 28 Fed., 189, 190; Tondeur vs. Stewart, Id., 561, 564; Coupler Co. vs. Pratt, 70 Fed., 622, 629."

And in Los Angeles Organ Co. vs. Aeolian Co., 143 Fed., 880, 885; 75 C. C. A., 88 (9th C. C. A.); the Court said:

"where a patent contains several claims, some of which are limited to details; the others are, prima facie, not to be restricted by insisting that they contain, as necessary elements, the particulars which are specifically covered elsewhere. The general rule is as stated by the Court in Risdon, I. & L. Works vs. Trent (C. C.), 92 Fed., 375, 388, that 'Infringement cannot be avoided by reading into a broad claim of a patent specific devices claimed in narrower claims of the patent.'"

In Bresnahan, et al., vs. Tripp Co., 102 Fed., 899, 900, 43 C. C. A., 48 (1st C. C. A.), the Court said:

"if some of the claims are limited to details, those which remain are prima facie not to be fettered by insisting that they contain, as necessary elements, the particulars which are specifically covered elsewhere."

In view of the above we are at a loss to understand how anyone can understandingly and legitimately say the glue product claims in suit are limited to the two-step process or any other features of the process or base claimed only in other claims of the patent in suit.

Walker on Patents (5th Ed., Sec. 176, p. 221) says:

> "To use the words of the Supreme Court, 'the claims measure the invention.' "

And (Sec. 339, p. 423):

> "Whoever infringes any one claim of a patent infringes the patent, whether or not it contains other claims which he does not infringe."

And especially is it true that a *product* claim should not be limited to the described *process.*

Of course, if the claims *on their face* state that the product is claimed only when made by a certain process, or "substantially according to the process described," then no product will infringe except when made by that process. Otherwise they are not limited to the process.

In Kuehmsted vs. Elberfeld Co., 179 Fed., 701, 103 C. C. A., 243, the 7th C. C. A., had a similar product patent before it. The evidence did not disclose what process defendant used to make it. The Court found infringement on the identity of the two products irrespective and independent of the process by which the defendant made its product.

Walker on Patents (5th Edition, Sec. 176, p. 223) says:

> "A process and its product, though they may be secured by separate claims in one patent, cannot be covered by one claim. 'A new product having definite characteristics by which it may be identified and which distinguish it apart from the process by which it was produced may be properly described by such characteristics and when so claimed and described the claims are not limited to the process.' "

In General Electric Co. vs. Laco-Philips Co., 233 Fed., 96, 105, 107; 147 C. C. A., 166 (2 C. C. A.), the suit was on certain product claims. The plaintiff's patent disclosed two processes for making the product but defendant made that product by a wholly different and subsequently invented process. Its product was held to infringe by the Court.

In Dunn vs. Toronto, 259 Fed., 258 (6th C. C. A.), the Court said, citing many cases:

> "in the ordinary and typical case the method and the product are separable inventions, supporting separate patents, one of which may be valid and the other not (Rubber Co. vs. Goodyear, 76 U. S. [9 Wall.], 788, 19 L. Ed., 566). It is therefore the duty of the Court to find, if it reasonably can, for a product patent some construction and scope which shall avoid, on the one hand, destroying its value—if not its validity—by confining it to the precise method of making which the patent has happened to show."

In Baker Co. vs. Refractories Co., 253 Fed., 741, the Circuit Court of Appeals for the Third Circuit said:

> "The patent in issue being a product patent we are not concerned with the process by which the product is produced; that forms the subject of another patent to Baker."

Tested by these simple and sound fundamental rules, defendants cannot escape infringement, for their product responds to every characteristic recited in the product claims in suit and to every characteristic of the finished Perkins' glue. Defendants do not even attempt to point out any distinction.

Whether defendants infringe the two-step process or glue base covered by other claims in the patent is obviously immaterial, for the two-step process claims and the claims limited to the use of a particular base are not in issue here.

Perkins under the law is entitled to cover the glue prod-

uct irrespective of how it is made and there is no justification in law or in fact for reading any process limitations into the claims for that glue product. If that glue product *per se* and without reference to process features, is not a patentable invention then **the claims in suit must under the law be declared invalid** and void for that reason. If the glue as defined by these product claims 28, 30 and 31 is old, these claims should be (and would have been in the prior litigation) declared invalid. But in point of fact and law the product was new with Perkins. If they are valid defendant cannot escape infringement under the law by reading into them specific process features claimed in other claims of the patent.

The 7th C. C. A. in the Solva Case Did Not Limit the Product Claims to the Two-Step Process.

In its summary of the prior art, the Court, in the Solva Case, comparing the prior art with defendants' two-step process and product (which were substantially identical with Perkins) said (251 Fed., 68):

> "*The only difference between the process of this particular patent and the practice of defendant, is in the use to which the glue material is put and the consequent difference of dilution of the solution thereof.* The patentee refers to the use of his adhesive for dressing or finishing, i. e., sizing or stiffening fabrics, while defendant and its customers employ the material for sticking veneer layers together. Therefore, the prior art patentee uses and describes a *relatively dilute solution*, while the defendants employ a relatively heavy solution just as the more familiar adhesive, animal glue, is used in dilute solution for sizing, etc., and in heavy solution as a glue for veneers, etc. *No other difference exists.* It is the defendants' view that this difference is an immaterial one." (Italics ours.)

The Court is referring to the Gerson & Sachse German patent or Virneisel French patent. The disclosure in the two patents is the same.

And at another part of the decision confirming this, the Court said (251 F., 70):

> "The difference between adhesives such as mucilage, sizing, etc., and glue suitable for veneering seems to consist largely in the degree of dilution,"

i. e., in the proportion of water to starch in the glue.

What the Court in the Solva Case held was, therefore, that this prior art discloses a process in which the starch is first degenerated by a *first step* with substantially the same chemicals as that employed by Perkins and defendants there, and to the same stage as reached by Perkins and defendants there, and that it was then dissolved by a *second step* in a solvent containing the same aqueous solution of the same reagent, i. e., caustic soda in water, and of the same concentration as Perkins and defendants there employed, i. e., the same concentration of caustic with respect to water; and that the only difference between what Perkins and defendants there did on the one hand and what was done in this prior art, was the *difference of dilution thereof,* i. e., the proportion of water in the glue with respect to the starch base. The Court there held that the prior art described a relatively dilute solution intended and usable only for sizing or stiffening fabrics or the like, while Perkins (and the defendants there) used a very much less amount of water, i. e., a heavy solution, and obtained a veneer glue not suitable for sizing or finishing.

It was also old to make a dilute starch sizing glue by a one-step process by dissolving so-called natural or raw starch in *excessive* water with caustic, as shown by Gerard and Dornemann.

The *only difference* between this prior art and Perkins was the *difference in the amount of water in the glue* which resulted in **important differences in kind** in the glue itself, making it a **new product.** The opinion of the Court in the Solva Cases states: *"No other difference exists."*

As stated in Naylor vs. Alsop, 168 Fed., 911 (8th C. C. A.), where the Court said:

> "The elements here involved are so numerous that a slight modification in the process would be likely to produce conspicuous changes in the product."

We, therefore, contend that 2nd C. C. A. and 7th C. C. A. in the recent cases have erred in assuming or holding that in the Solva Case it was held that Perkins' product was patentably new because of the combination of the two processes. The facts regarding the prior art could not justify any such holding there and cannot justify it here. We contend that these Courts in the later cases erred in ignoring the limitation as to the amount of water and the new characteristics resulting in the glue from the use of a limited amount of water which are the main features differentiating Perkins from the prior art mentioned. When these Courts hold that Perkins' product was patentably new because of "the combination of two processes," it is in effect a finding that **all Perkins did was to take two steps to make glue instead of one, and either way was as fully disclosed in the prior art as the other.** While these two Courts (2nd C. C. A. and last decision 7th C. C. A.) thus hold that the product claims are limited to "the combination of two processes," yet, since this combination idea was old in Gerson & Sachse, these Courts in effect have held that **there is nothing patentable in the whole Perkins patent** or any of its claims. **They allegedly save the claims by reading into them merely that which is old.**

If the Product Claims Are Valid, Defendant Infringes.

Where, as in the case at bar, the product is a recognizable and definable individual by itself (differentiated by the characteristics recited in the product claims) and can be made in different ways and by different processes, in that case it is an invention by itself and irrespective of any par-

ticular process of making it. Claims 28, 30 and 31 in suit are for the finished glue constituted or composed of the ingredients severally recited in those claims in the condition and proportions recited in those claims and having the properties recited there. *If that finished glue is not patentable by itself those claims must be held invalid.*

The defendant in the end reaches the same identical wood and fiber glue Perkins reached, and it is specified in claims 28, 30 and 31, and if these claims are valid there can be no question of infringement under the authorities cited.

Defendant selects a starch as it comes on the market which is not quite degenerated so as to come within certain tests specified in the patent and then dissolves the same in the small amount of water with caustic, but prolongs the agitation with heat so as to further reduce the viscosity in the dissolving step, thereby obtaining as an end product the same good as animal glue which Perkins obtained by his preferred process. We submit such practice infringes the product claims 28, 30 and 31, whether or not it infringes the process claims. See Footnote:

Defendant has merely found a way to achieve the required semi-fluid condition by continued mechanical agitation with heat after the glue has come across into a colloidal compound instead of attaining that same semi-fluid condition (at once upon the glue coming across) by previous slightly greater degeneration of the starch.

---

*For all we know the defendants' glue may be made by a two-step process. True, the testimony shows they only perform the second or dissolving step on the starch base, which is obtained from Java. However, no one available knows what happened to it in Java. It is generally known that the starch is obtained by grinding the cassava roots in water and washing away the impurities. It is also known that chemicals have been used to bleach the starch and help separate out the impurities. Most of the factories in Java operate under secret processes, so that we are unable to learn whether they use such chemicals and in quantities such as would produce the condition of degeneration found in defendants' base, or whether that degeneration is produced by some change in the cultivation of the plant. Obviously it would be very easy for the starch manufacturer in Java to secretly carry out the first step or process there and we would have no way of proving it.

There may be said to be a difference in *process* between the way defendant attains the end product and the way Perkins *preferred* to attain the same end product. But there is no difference in the end products themselves. The same finished glue product attained by Perkins having all the characteristics set out in claims 28, 30 and 31, is attained and used by defendant with its Kane base.

If these claims are valid we submit they are infringed by defendant's glue in question and **if they are not so infringed they must be invalid.**

Plaintiff's Alleged Failure to Appeal From Judge Sanborn's Reasoning Has No Bearing.

Much has been made of the fact that plaintiff did not appeal from Judge Sanborn's memorandum on final decree in the Solva Case, discussed at pages 115-121, *ante*. Apparently this was an important factor in the mind of the 2nd C. C. A. and the 7th C. C. A. (in its last decision), for the 2nd C. C. A. said:

> "We are not advised that any appeal was ever taken from this interpretation of the ruling of the Circuit Court of Appeals" in the Solva Case,

and the 7th C. C. A. said (referring to Judge Sanborn's memorandum on entry of final decree):

> "the Perkins Glue Company failed to appeal from his consequent action."

But the product claims were the only claims plaintiff particularly cared about and the decree held those valid and infringed as plaintiff had prayed in its bill of complaint. Plaintiff could not appeal from such holding in its favor, no matter what Judge Sanborn's reasons were for holding them valid. No appeal lies from a Court's opinion and reasoning (Russell vs. Kearn, 69 Fed., 94; 16 C. C. A., 154

(C. C. A., 7th); Clarke vs. Deere & Mansur Co., 80 Fed., 534, 537; 25 C. C. A., 619 (C. C. A., 7th); Evans vs. Suess, 83 Fed., 706, 709; 28 C. C. A., 24 (7th C. C. A.). We submit that the 6th C. C. A. below correctly disposed of this question, where it stated (Rec., 657):

> "Several references have been made to the fact that plaintiff did not appeal from the decision holding invalid the second-step process claims as they read, and for lack of such appeal inferences are drawn against the plaintiff as to the validity or scope of the final product claims. This is again a non-sequitor; but we see no basis for such inferences. The plaintiff had an infringement decree upon the product claims. Its injunction could have been no broader, nor its recovery of damages greater, if the process claims were also sustained. The decree sufficiently bound the defendant, and it would not bind strangers anyhow, no matter what form it took. Whether plaintiff should appeal as to these process claims was merely a matter of policy,—and of doubtful policy. As to the product claims, **it could not appeal**, because the decree was in its favor. It acquired no right of appeal because Judge Sanborn used some reasoning which might be applied to limit those claims in some later litigation with others."

The reasoning of the 2nd C. C. A. and 7th C. C. A. to the effect that plaintiff was estopped to contend for its construction of the valid product claims because it failed to appeal as to the process claims is without precedent and contrary to accepted legal principles.

The Disclaimer as to Process Claims 9, 10, 11, 12, 13, 14 and 38 Does not Limit or Affect the Product Claims 28, 30 and 31.

The C. C. A. in the Solva Case found that Perkins was not the inventor of the glue base *per se;* nor the inventor of the first step degeneration process *per se.* Plaintiff accepted this holding and filed an absolute disclaimer of these

base and base process claims. But this could not affect plaintiff's monopoly secured by the final glue product claims 28, 30 and 31 which were for a different invention.

The Court also held invalid the claims for the "so-called second step as such" although holding valid the "claims of the patent for the final process."

But Judge Sanborn, on the coming down of the mandate, was unable to find in issue any claims which corresponded to second step claims "as such," except such process claims as 13 and 38, and so, in his final decree, he held those claims invalid against his own reasoning on the merits, and against his own reasoning from other parts of the C. C. A. opinion.

This holding of process claims 13 and 38 invalid was made although the Circuit Court of Appeals had nowhere pointed out any such process as old in the prior art, unless by "second step" it meant merely the step of dissolving starch broadly (such as soluble starch) in water and caustic to produce a different kind of a product, including the old sizes and pastes.

We submit the C. C. A. in the Solva Case construed these broad process claims so broad or indefinite as to cover processes for making sizes and pastes. Perkins did not intend to claim the process so broadly, and so with respect to such *process* claims (and such process claims only) he disclaimed any *process* which did not start with a base degeneration to the extent prescribed in the patent, in order to limit his *process* invention substantially to his preferred process.

The glue itself was already adequately covered by product claims such as 28, 30 and 31. The disclaimer *limited merely the process claims* to the use of a base degenerated to the extent described in the patent. **The process claims might have been originally so limited when the patent issued, and, of course, in such case it could not have been successfully contended that the product claims were limited in the same**

way; nor could it have been contended, even if the patentee had cancelled all process claims before the patent issued and retained only the product claims, that he thereby acknowledged that the public had a right to carry out his or any process *to make his product.*

A process claim may only define the process by features which in some relation are old in the art, and in such case the process claim is too broad or indefinite. The C. C. A. in the Solva Case (according to Judge Sanborn) thought this the situation with the second step process claims 13, and 38, but Perkins' disclaimer which limited those claims to a further feature of the process, namely, starting with a particular base, did not give the public the right to use some other process to make the new product *covered* by the product claims 28, 30 and 31. The disclaimer merely conceded that the patentee would not hold as an infringer of the *process claims* anyone who did not start with a base degenerated to the extent stated in the patent, and conceded nothing with respect to the glue product Claims 28, 30 and 31.

These second step process claims 13 and 38, after reciting the step of the process, conclude with the statement that it is to produce a glue having the adhesiveness of animal glue. The argument was made by plaintiff on the coming down of the mandate before Judge Sanborn that such process claims as 13 and 38 could be limited by construction to the production of the new Perkins glue, but when Judge Sanborn with hesitation adopted the view that those claims were intended by the C. C. A. to be held invalid, it could only be assumed that if the C. C. A. so intended, that intention must have been based on a construction of those claims which disregarded the concluding language of the claims as to the character of the result (equivalent to "whereby clauses" in the claims). For it is a rule of construction of patent claims in many courts and it is an ordinary working rule in

the Patent Office that the novelty of a claim must be found elsewhere than in the "whereby clause." (See Foot Note.)

There is nothing in all this to warrant the conclusion that plaintiff thereby admits that defendant's process and defendant's product were old in the art.

Walker on Patents (5th Ed., 207, p. 275) states:

> "The mere fact of disclaimer is no evidence that the matter disclaimed is a part of the prior art."

In the case of Sessions vs. Romadka, 145 U. S., 29, the matter disclaimed did not belong to the prior art but on the contrary comprised several other inventions of the patentee which the patentee did not choose any longer to claim in that particular patent.

Thus in Electro Dynamic Co. vs. Westinghouse Co., 191 Fed., 506, 508, where the plaintiff sought to base the novelty of its claims on the statements of whereby clauses, the Court said:

> "That this 'whereby clause', adds nothing to the claim is fundamental. It is a statement of asserted result, not of method or means of reaching it; and in this instance it is but a repetition of the stated 'object of my invention' with which the application begins, a sort of Q. E. D. triumphantly affixed to the asserted solution of the problem."

See also Burke Co. vs. Tool Co., 232 Fed., 145, where the Circuit Court of Appeals for the Second Circuit adopted the opinion of Judge Learned Hand. In that opinion the latter had said of the words "whereby approximately the same speed, etc.:"

> "Nothing is gained or lost by these words; if they are surplusage they are at least harmless surplusage, adding no element to the claim which is just as good without as with them."

Judge Kohlsaat, who wrote the opinion of the Circuit Court of Appeals in the Solva Case, seems to have held this view of the law as to the interpretation of claims. See Parramore vs. Stein, 125 Fed., 19. There the only differentiation in the claims from the prior art was in a statement of adaptation. Of this Judge Kohlsaat said:

> "The patent is for a hose supporter, and nothing more. The requirement that it shall be adapted to be detachably engaged with the corset stud or with the corset at the point where the corset sections meet, is merely descriptive * * * we must, for the purpose of this inquiry, entirely disassociate the question of the place of use or application of the supporter of complainant from the article itself."

So in Carnegie Co. vs. Cambria Iron Co., 185 U. S., 403, the disclaimer was held by this Court to be a good and valid disclaimer although it merely removed an ambiguity.

This Court said in Sessions vs. Romadka, 145 U. S., 29, that "the power to disclaim is a beneficial one."

We submit a disclaimer should not be given by the Courts an effect so harsh and so hostile and so contrary to every purpose of the patentee in entering it as to extend it far beyond its terms and its purpose and convert it into an instrument of unintended self-destruction.

Perkins' disclaimer was filed after due consideration and it must be presumed that if it was the intention to limit the product claims, they would have been mentioned in the disclaimer.

Defendant's counsel has heretofore put the question: How is it that a product produced by the disclaimed process is nevertheless within the patent? Like many other misleading questions, the question erroneously assumes that the disclaimer disclaimed a process which only produced Perkins' glue instead of a broader process *claim* which covered the production of other things; and the question likewise erroneously assumes that there was only one invention covered by the patent and ignores the fact that there were a plurality of inventive ideas covered by different claims of the patent whereby the patent is in that respect like two patents, one for the process and the other for the product. It was the *claims* in the process patent which were disclaimed and the claims in the product patent were not disclaimed, for **those had been held valid and infringed and required no disclaimer.**

The fact that the process claimed may be unpatentable *per se* because capable of producing not only the product claimed but also some other and old product is no ground for holding the new product producible by that process unpatentable.

We submit the case at bar is analogous to Rubber Co. vs. Goodyear, 76 U. S., 788; 19 L. Ed., 566, where **this court**

held the process claim invalid but sustained the product claim as valid and infringed.

The patent there in suit was originally granted to Goodyear for new and useful improvements in India rubber fabrics. This patent was surrendered and reissued on June 15, 1849, for a new and useful improvement in processes for the manufacture of India rubber. This reissued patent was extended June 14, 1858, and was again reissued November 20, 1860, in two patents, one entitled "For Improvements in the Manufacture of Caoutchouc," and the other for "Improvement in the Art of Preparing Caoutchouc."

One of these, No. 1085, was for the process by which vulcanized rubber is manufactured. The other, No. 1084, was for the product of the process in the form of the article produced.

This Court said:

> "It is contended by the appellants that both these patents are invalid, for two reasons: One, because they are broader than the claims of the patent surrendered by the executor; and, Two, because one is for a process and the other for the product of that process. The Court below held the objection to the patent for the *process*—that it is too broad—fatal to its validity *because the claim embraced other vulcanizible gums besides India rubber as articles to which the process was to be applied.* From this part of the decree below no appeal was taken by the complainants. It is, therefore, final and conclusive in its effect, and the patent to which it relates must be laid out of view. It remains, therefore, to consider only the patent, No. 1084, which is for the product." (Italics ours.)

This Court (in sustaining the product claim, although the process claim was invalid) said:

> "Patentable subjects, as defined by the Patent Laws (Act of 1836, Sec. 6) are 'any new and useful art, machine, manufacture or composition of matter or any new and useful improvement on any art, machine, manufacture, or composition of matter.' A machine

may be new and the product or manufacture proceeding from it may be old. In that case the former would be patentable and the latter not. The machine may be substantially old and the product new. In that event the latter and not the former, would be patentable. Both may be new, or both may be old. In the former case, both would be patentable; in the latter neither.

"The same remarks apply to processes and their results. Patentability may exist as to either, neither, or both according to the fact of novelty or the opposite. The patentability, or the issuing of a patent as to one, in no wise affects the rights of the inventor or discoverer in respect to the other. They are wholly disconnected and independent facts. Such is the sound and necessary construction of the Statute."

This Court held the product claim valid and infringed, in spite of the fact that the process claim for making the article was invalid.

The Perkins' disclaimer, disclaimed the claims to the glue base and glue base process or first step and also limited the second step process claims to certain preferred process features. The glue product claims (including 28, 30 and 31 here in suit) were deliberately omitted from the disclaimer. The fact that they were so omitted from the disclaimer is, we submit, conclusive that the disclaimer could not affect them. Under principle and authority a disclaimer as to one claim can not be legitimately construed as a disclaimer of a different claim.

Robinson on Patents, Vol. 2, Sec. 650, page 289, says:

"The disclaimer of a void claim does not affect such other claims of the patent as by themselves are valid."

The 9th C. C. A. in Graham vs. Earl (92 Fed., 155) discussed this question at length and held that the disclaimer of claims which are too broad does not affect the scope of other claims which are valid even though the article covered by such other claims is within the scope of the disclaimed

claims. The pertinent parts of this decision are quoted in the footnote below.

In Graham vs. Earl, 92 Fed., 155, 158 (9th C. C. A.), the Court said:

"Claims 1 and 2 of the patent just referred to are exceedingly broad, and cover all possible means for holding the lids of the ventilators open in oppositely inclined positions, while its claims 3 and 4 are more narrow, and cover only the specific means therein particularly described for holding such lids open. *The whole argument of the plaintiff in error upon this point seems to rest upon the proposition that, as Claims 1 and 2 are broad enough in their descriptive language to include the specific combinations covered by Claims 3 and 4, plaintiff's disclaimer of Claims 1 and 2 was, in legal effect, a disclaimer of the particular device described in claims 3 and 4; in other words that the particular means for holding the lids of the ventilators open as described in Claims 3 and 4 were thus disclaimed because such means are covered by the broad language of Claims 1 and 2. In support of this position it is argued that the disclaimer filed by the plaintiff is not to be treated as a simple withdrawal or expunging of Claims 1 and 2* from the specifications of which they originally formed a part, and *thus leaving the remaining claims to be construed as if such claims 1 and 2 had never been made*, but that the instrument of disclaimer is to be construed by itself *as an independent and affirmative declaration by the plaintiff that he was not the first or original inventor of any device covered by Claims 1 and 2*; and the case of *United States Cartridge Co.* vs. *Union Metallic Cartridge Co.*, 112 U. S., 644, 645; 5 Sup. Ct., 486, is cited to sustain this proposition. In that case it was said:

> 'The disclaimer was one of the facts of invention. It could not lawfully be anything but a disclaimer of the fact either of original invention or of first invention. It was not merely the expunging of a descriptive part of the specification, * * * but it was a disclaimer of all claims based on such descriptive part,' etc.

But in that case the Court was discussing the effect of a disclaimer of the fact of invention of a specific and particular mechanical device, the language of the disclaimer thus construed by the Court being:

> 'Your petitioner disclaims the said movable die, D, called a bunter, as being the invention of said Ethan Allen; thus leaving the description of said die, D, the same as shown in the original patent and the drawings thereof.'

Of course, in such a case the Court properly held that the disclaimer was specific, and must be construed as an affirmative declaration that the patentee was not the inventor of the particular thing dis-

(*Footnote continued on next page.*)

In United States M. P. Co. vs. Hewitt Co., 236 Fed., 739, 742 (7th C. C. A.), it was held that a disclaimer of one claim does not affect the scope of another claim which was not mentioned in the disclaimer. The Court said:

> "Clearly the second claim was disclaimed because it covered, not a ring, but an old combination of the ring and the other elements used in the stuffing box. The packing ring in this combination was described only as composed of interlocking segments and formed with a conical end. *Obviously, neither this claim nor its disclaimer can extend or limit the scope of the first claim,* the only claim for a special ring construction."

We submit that if the law as laid down in these cases (and heretofore universally followed) is sound, there is nothing left of defendant's position with respect to the disclaimer.

Defendant's unwarranted assumption that, if the disclaimer relieves it from the charge of infringement of the seven stated *process* claims to which the disclaimer refers, it is thereby relieved from the charge of infringement of all of the claims of the patent, is, we submit, nothing short of ridiculous.

The present case is to be carefully distinguished from the case of a disclaimer with respect to the patent as a whole or with respect to the invention of the patent as a whole, for in such a case, the disclaimer is general in its nature and is intended to be general and applicable to all the claims.

---

claimed. *In considering the scope and effect to be given a disclaimer, the same rules are to be observed as in construing any other written instrument, and so as to carry out the intention of the person executing it, as indicated by its language when construed with reference to the proceedings of which it forms a part.* It cannot be read independently of its relation to the original specifications, of which it becomes a part when recorded. Applying this rule of interpretation to the disclaimer, filed by the plaintiff in this action, it would seem too clear to admit of any doubt *that such disclaimer cannot be given the broad and sweeping effect claimed for it by the plaintiff in error.*" (Italics ours.)

A disclaimer when once filed is as if it had always been a part of the patent and a part of the claims to which it relates.

Walker on Patents (5th Ed., Sec. 207, p. 275) says:

> "The construction of a patent, after a disclaimer has been properly entered, must be the same that it would have been if the matter so disclaimed had never been claimed."

Suppose the patent had issued with Claims 9, 10, 11, 12, 13, 14 and 38 reading exactly as the disclaimer now makes them read, what effect under that supposition would the fact of such limitation of those process Claims 9, 10, 11, 12, 13, 14 and 38 have had upon the proper legal construction of the product claims 28, 30 and 31 in suit? We submit there can be but one answer to that question. It would have had no effect whatever. It would have had no more effect, for example, than the recital of process details that is found and has always existed in Claim 21 or in any other detail claim of the patent and that is no effect at all.

We submit that the disclaimer can not and does not in the slightest degree, affect the scope of the product Claims 28, 30 and 31 here in suit.

The Inconsistency of Defendant's Position.

Defendant's counsel assert in their brief (pp. 3, 4) that defendant's position was sustained by the 2nd C. C. A. in the Standard Furniture Case and by the 7th C. C. A. in the Wisconsin cases. We submit this is not so.

The position taken by the 2nd C. C. A. in the Standard Case (287 Fed., 109) was that

> "There can be no infringement because the defendant is not using a glue which is the result of **both steps** of Perkins' patent."

and that patentability resulted solely from "a combination of **two processes** severally old," and similarly the position

of the 7th C. C. A. in the Wisconsin Cases (292 Fed., 596) was that

> "the only patentably novel thing that could be attributed to Perkins' labors was the **combination of two processes** which were severally old."

The position of the defendant's counsel here is quite different, for instead of asserting that the patentable novelty consisted in the combination of the two processes or steps, they assert (p. 6) that

> "The gist of Perkins' invention, and the thing patented, was the choice of a starch glue-base degenerated to within a specified range,"

i. e., degenerated so as to come within the so-called 9 to 1 boil up test and 170° hot water test (p. 7). And defendant's counsel say (p. 3) that the glue "product claims sued on must be restricted to glue made from a starch having reduced water-absorptiveness within the range" measured by these "tests of the patent."

The Courts in the prior litigation did not say that these product claims are limited to a glue made from a starch base coming within these tests. Therefore, defendant's position is not sustained by any of the prior decisions and defendants have taken a position which is entirely different from and inconsistent with that taken by the Courts in the prior litigation including the 2nd C. C. A. in the Standard Case, and the 7th C. C. A. in the Wisconsin Cases, on which defendant allegedly relies.

However, we cannot see that it makes any material difference whether the glue product claims have read into them the two step process or the tests for the base, which, if anything, are likewise characteristics of Perkins preferred process, because the base is an intermediate product used in the process. Under the authorities cited, the reading of one set of process limitations in the glue product claims is just as illegal as the other.

The Absurdity of Defendant's Argument With Respect to the So-Called Tests for the Base.

The defendant's position (p. 2) that the thing patented is "characterized by the asserted novelty that for the glue base a starch is chosen" which comes within the 9 to 1 boil up test and the 170° test, and (p. 3) that the product claims in suit must be restricted to a starch base responding to these tests, seems to us wholly absurd.

It is absurd to say that a claim for one product (veneer glue) shall be restricted to the characteristics of another product (starch base). Especially is this so when as here the physical characteristics of the two are entirely different. The glue product is a viscous semi-fluid mass having the properties of animal veneering glue. The starch base is a dry powder having none of the characteristics of the glue product, and when the starch is dissolved in the water with caustic it loses all its characteristics as starch base and enters into the colloidal glue compound, and it is physically impossible to apply the 9 to 1 boil up test or the 170° test to that final glue product.

When defendants thus argue that it was this base of a particular degree of degeneration which was the new thing and gave patentability, they raise a false issue, for they thereby falsely assume that plaintiff is charging infringement of the alleged base invention or the process invention wherein a particular base is used, whereas the claims in suit are for an entirely different invention, i. e., the product, starch veneer glue.

We submit the issue here is not whether the defendant has used the Perkins preferred base, but whether the defendant has made a starch veneer glue having the characteristics defined in the product claims 28, 30 and 31 in suit, and the extent of degeneration of the base is not an element or feature of those claims. Defendant's counsel simply ignore the vital limitations stated in the claims in suit, and attempt to read into them a particular degeneration of the base, contrary to the law as laid down in the authorities, *ante*. Defendants erroneously characterize the

final glue product invention by the characteristics of a different invention. It is absurd for defendant's counsel to assert that the essential novelty lay in the use of a particular glue base, for that glue base was found to be old in Gerson & Sachse and every one has since accepted that holding. (See Defendant's Brief, p. 13.)

Pursuing their unsound and illogical reasoning, defendant's counsel, on pages 14, 15 of their brief, refer to Mr. Stryker's testimony where he said that in Mr. Perkins' early work "it was a question of getting a starch material modified in such a way" that when mixed up with the critically small amount of water it would produce the good as animal glue, and that the practical problem which Mr. Perkins worked out was "the discovery of proper means to, in the first place, modify a starch base to a certain defined and recognized point," but it should be noted that Mr. Stryker also emphasizes the importance of using the critically small amount of water, and what is more we are not asserting that defendant infringes Perkins "means," i. e., his process. This suit is for infringement of the final glue product.

It is true that in following his preferred two step process, in which he started with the old high viscosity starches, Perkins had great difficulty. He may have followed an unnecessarily tortuous path to reach the ultimate starch veneer glue, but the difficulties which he thus had in arriving at his preferred *process* can not be lawfully applied to limit his claims to the ultimate product which was new in and of itself. It may or may not be that his *process* is limited to the use of a base degenerated as stated, but the other invention, his glue product, is claimed independently of such process and is, therefore, not so limited. Defendants might just as logically say that Perkins had great difficulty in finding or developing a machine for making his glue and found it necessary in commercial operation to use a specially constructed power driven mixer, and his patent is, therefore, limited to glue made in such a specially constructed power driven mixer. We submit such line of reasoning is absurd.

Following the same illogical line of reasoning defendant's counsel (pp. 16-21) refer to various statements in the patent in suit and particularly to that portion where Perkins describes in detail his first step for making his preferred base to be dissolved by his second step, and defendant's counsel, therefore, say (p. 21) that "the essential thing was a particular degree of degeneration." It may or may not have been essential when following his preferred two step process, but it was not and is not essential to his final product—the new starch veneer glue, and the patent makes this clear by omitting any reference to such degree of degeneration in the product claims in suit.

But having thus set up a false issue, i. e., that the invention in issue is the production of a base of "a particular degree of degeneration" instead of starch veneer glue, defendant's counsel say (p. 21) that the law requires that the patentee explain "his invention so that the public may know how to practice it and they refer to the 9 to 1 boil up test, and defendants argue (p. 22) that this 9 to 1 boil up test "marks the metes and bounds" of the invention and (p. 23) that since defendant's base does not respond to this and the 170° hot water test, there is no infringement, and they cite certain cases. These cases, we submit, do not sustain defendant's position. See footnote below.

In O'Reilly vs. Morse, 15 How., 62, 112; 14 L. Ed., 601, 623, it was held that one might reissue a patent so that it would give a more perfect description of his invention but, we submit, the court did not hold that the whole patent and all its claims were thereby necessarily limited to each and all the details of description which were thereby introduced for the purpose of enabling others to practice the invention in its most efficient form.

In Cochrane vs. Badishe, 111 U. S., 293; 28 L. Ed., 433, 439, this Court said (p. 310), that

> "Every patent for a product or composition of matter must identify it so that it can be recognized aside from the description

(*Footnote continued on next page.*)

There is nothing in the specification of the patent to the effect that such tests are to be considered as defining or

---

> of the process for making it, or else nothing can be held to infringe the patent which is not made by that process."

With this we heartily agree, for the product claims in suit do identify the product so that it can be recognized apart from the process or base which Perkins described as preferred for making it and, therefore, these claims are not limited to the particular base or process which Perkins gave as illustrative of one method of making his final product.

In Bene vs. Jeantet, 129 U. S., 683; 32 L. Ed., 803, the only product claim involved was one which defined the product as one made only "by the method of refining substantially as herein described" and, of course, the Court properly held that nothing could infringe except when made by the method so described.

In The Incandescent Lamp Case, 159 U. S., 683, 474; 40 L. Ed., 221, 224, the rule is stated that

> "If the description be so vague and uncertain that no one can tell, except by independent experiments, how to construct the patented device, the patent is void,"

and it was found that the description was insufficient to teach one how to make a practicable lamp and the patent was held invalid. Following this rule the Courts have frequently said that the patent must fully describe at least one way of making the patented article, but it is equally well settled that the patent is not thereby limited to that particular way.

In the Minerals Separation Case, 250 U. S., 336; 63 L. Ed., 1019, the claims were process claims and the claims on their face were limited to certain proportions. The Court, therefore, quite properly held them limited to such proportions and that a process employing proportions not falling within the *limitations set forth in the claims* did not infringe. Plaintiff here is not asking any such enlargement of the claims, for every characteristic and feature set forth in the claims in suit is equally found in defendant's glue.

Tyler vs. Boston, 7 Wall., 327; 19 L. Ed., 93, is an old jury case. It is authority for the rule that the patent must set forth in detail at least one way of making the patented article, but the Court held that the patentee was entitled to cover equivalents and such equivalents include materials which can be discovered only by experiment provided they are equally good.

Matheson vs. Campbell, 78 Fed., 910, 917, merely follows the rule above set forth in Cochrane vs. Badishe, 111 U. S., 293, and holds that "when the body under investigation fails to respond to the specific tests, the patentee has himself selected he can not fairly insist that it is identical with his product." But in that case there was only one claim in the

(*Footnote continued on next page.*)

limiting the final glue product invention, but quite the contrary.

The 9 to 1 boil up test is described in the patent beginning at line 127, page 3. The patentee does not give this as a universal test of his invention but merely as **"one way"** which he found "quite satisfactory for determining when the action of the **acid or its equivalent"** has been "carried **far enough** in the first step." The test was obviously intended to be applied only to a base degenerated by the sulphuric acid or its equivalent and then only to determine when the degeneration had been carried "far enough." It was **not a limiting test** of any thing but only a **"quite satisfactory" test** given by way of example (as held by the 6th C. C. A., below) as one means by which the operator might surely reach the desired result, and not as the only means by which he could reach the result. The patent nowhere states that the glue product may not be made from a base not falling within the test. It is perfectly apparent that the test was given, not as any limiting characteristic of the final glue (to which it is not applicable), nor even as any limiting characteristic of the base, but merely as characterizing **one example** of a suitable base, thereby necessarily implying that other bases might be used.

---

patent which was for a dyestuff product, and the tests were for that product, and not for a different product as in the case at bar. The citation is wholly irrelevant because it is obvious that a product cannot be defined or characterized by tests which do not apply to it but only to some other and different product—the base.

American Co. vs. Mesta Co., 18 Fed. (2nd), 538, is likewise merely authority for the proposition that where the patentee identifies his product by certain "novel characteristics," only a product having those characteristics will infringe. Applying the rule to the case at bar nothing can infringe the product claims in suit unless it possesses all the characteristics recited in those claims and has substantially the properties, etc., of the final starch veneer glue described. Since defendant's glue has all these characteristics and properties, infringement is clear.

These cases are no authority for holding that the patented product here is limited to the characteristics of another and different product, the glue-base.

Substantially the same may be said with respect to the 170° test described in the patent beginning at line 74, page 4. This so-called test is not given as any limiting test for the patentee merely says "Also in actual practice I have found that a good is produced" when a base is used which is degenerated sufficiently to respond to the test. He says that such a base is suitable for making the glue, but this is very far from saying that a base *must* be degenerated to that extent in order to make the glue. Indeed the patent points out that the glue may be made from certain grades of untreated cassava and specifies neither the 9 to 1 boil up test nor the 170° test in connection therewith.

We submit that the only limiting test which may be applied, if any, is that indicated in the patent at lines 40-43, page 4, where it is indicated that the base is one which "may be formed into glue by using only from one to three parts of water." This is evidently what was referred to by the C. C. A. in the Solva Case where they said (251 Fed., 69), referring to various so-called tests, "The most satisfactory of these is to apply the second step of the patent and if the result is the veneering glue of the patents the operator has guessed right," and defendant's expert agrees with this where he says (Rec., 178):

> "His fundamental and final determining test is apparently the fact that it forms a glue with one to three parts of water."

None of the Courts has considered the 9 to 1 boil up test or the 170° test material on the question of infringement of the glue product claims. Even the 2nd C. C. A. in the Standard Case (upon which defendant allegedly relies) found (287 Fed., 111) that defendant's base there was "of that degree of viscosity, etc., which Perkins achieved by his degenerative process" although it was

there conceded that it did not fall within the 9 to 1 boil up test. These tests serve the purpose of indicating one way in which the glue of the patent can be produced *with certainty.* They furnish no possible basis for a limitation of the scope of the glue product claims.

Defendant's counsel refer (p. 24 of their brief) to the statement in the patent that the glue may be made with "certain grades of untreated cassava" and they say this was inserted by amendment and (p. 25), if it be construed to include starch which does not fall within the 9 to 1 boil up test and 170° test, it is invalid for new matter. We submit to the contrary. This amendment merely inserted a statement of fact that the same glue could be made from certain grades of untreated cassava, etc., and, it therefore "related to the original purposes and objects set forth in the original specification and claims" as held by the 7th C. C. A. in the Solva Case (251 Fed., 66). Defendants counsel argue (p. 25) that plaintiff's attorneys and expert in the Solva Case interpreted the language to mean only untreated cassava which responded to the 9 to 1 boil up test and 170° test. Plaintiff's attorneys and expert gave no such interpretation in the Solva Case and the Court there in effect held just to the contrary, for most of the starch base there involved, was untreated cassava and there was no evidence that it came within either of these tests and yet the Court held that the glue made therefrom was an infringement. Defendant's counsel cite certain cases to the effect that patents should not be enlarged by amendment so as to cover other inventions made **prior** to such amendments. There is no evidence here that anyone else conceived of the possibility of making a starch veneer glue from any "untreated" starch **prior** to the amendment in question, and in any event the claims in suit are amply supported by the original specification without the amendment, for a patentee is not required to state every possible method for making his product in order to

cover the product however made. The cases cited do not aid the defendant. See footnote.

Defendant's contention here is, in effect, that if one files a patent application for a new product and desires to cover the product when made by any process, he must describe in his specification every possible process by which the product can be made, and if he omits one such process and someone later makes the same new product by such process, then the latter is not an infringer, because to include such omitted process is unlawful for new matter. We submit that is not the law and never has been the law. Under the authorities hereinbefore cited the rule is laid down that a process and its product are separable inventions and a claim which defines the new product by its distinguishing characteristics (as here) is not restricted to the product made by the process which the patentee happened to describe.

Defendant's counsel say (p. 26) that defendant's base is "of high water-absorptive propertiveness," i. e., of high viscosity. It may not fall within the so-called 9 to 1 boil up test and 170° test, but it is not a high viscosity starch in the sense of the patent. It is of medium range and relatively low compared with ordinary cassava starches of Perkins time (see ante, pp. 94, 95).

Defendant cites Railway Co. vs. Sayles, 97 U. S., 554, 564; 24 L. Ed., 1053, 1057, where this Court said, "The law does not permit such enlargements of an original specification, which would interfere with other inventors who have *entered the field in the meantime*." As above stated there is no such situation in the case at bar.

In Eagleton Co. vs. West Co., 111 U.S., 490; 28 L. Ed., 493, the Court found that the patentee did not describe and did not have knowledge of, the *tempering* of the springs before he filed his application. His application was addressed solely to *japanning* which was old and no method of *tempering* was disclosed. The amendment, which changed the patent to one for *tempering*, was, therefore, void for new matter. If here, Perkins had not in his original specification, described any method of making the starch veneer glue and had not described such glue itself, then the case cited might be applicable, but since Perkins fully described both in his original specification, the case cited is not pertinent.

The same may be said of Steward vs. American Co., 215 U. S., 161, and Michigan vs. Consolidated Co., 67 Fed., 121.

Defendant's counsel (p. 27 of their brief) refer to the Solva case, and erroneously assume that plaintiff's counsel now take a different position from that which they took in the Solva Case with respect to the glue product claims in suit. Whatever plaintiffs position there may have been with respect to the glue *base* and *base process* claims, plaintiff did not there take the position that the essential novelty in respect of the *glue product* claims here in suit was in the selection of a starch responding to the 9 to 1 boil up test and 170° test as defendant's counsel erroneously assume. Most of the Solva starch was untreated cassava as it came on the market and there was no evidence that it responded to these tests. Plaintiff contended that the glue made from such starch was an infringement and the Court so held.

Defendant's counsel argue (pp. 28, 30, 31) that plaintiff there distinguished from Gerard, Dornemann and Poplar Bluff "by insisting upon the essential importance of the first step—producing or selecting a starch base having the specified reduced water-absorptive properties," and because they used "undegenerated starch they were outside the scope of the patent." We submit this is contrary to the fact for the reasons just pointed out. Plaintiff there distinguished from Gerard, Dornemann and Poplar Bluff on the ground that they did not use the critically small amount of water and did not produce a glue having the characteristics set forth in the glue product claims in suit. Incidentally it may have also been pointed out that Gerard and Dornemann did not disclose what viscosity of starch they used.

Defendant's counsel (p. 29) quote that part of Solva decision which reads

> "The gist of appellee's contention as stated by counsel is that Perkins discovered that there is a point of degeneration of starch at which, when degenerated to that degree, the starch is treated to not to exceed three parts of water and a solvent there is produced

> veneering glue as good as or better than animal glue, and that appellants have appropriated that discovery and the application of it."

And they argue (pp. 29, 30) that, therefore, the gist of the invention was the choice of a starch coming "within the range measured by the tests of the patent." But this can not be, because the Court obviously found as an infringement, glue made from untreated cassava irrespective of whether it came within such tests. The statement above quoted does not sustain defendant's position. Although plaintiff's contention there quoted was made with particular reference to the process and base claims involved in the Solva suit, the doings of defendant here come squarely within what the Court there said was the gist of plaintiff's contention, for defendant's starch base here is one "degenerated to that degree" at which when "treated to not exceed three parts of water and a solvent, there is produced veneering glue as good as or better than animal glue."

Defendant's counsel (pp. 29, 30) refer to the fact that, although Mr. Kane was enjoined in the Solva case, plaintiff has not attempted to enforce the injunction against Mr. Kane or the Kane Co. in respect of his contributory infringement by supplying the defendant here with its base. Plaintiff was informed that Mr. Kane's company was financially irresponsible, and as soon as one of his companies was enjoined he started up under another company. We submit plaintiff should not be prejudiced because it elected to proceed against the direct infringer who was financially responsible instead of against the irresponsible "fly by night."

Defendant's counsel on pages 31, 32, 67, refer to the test made in the Solva Case on "ordinary" high viscosity undegenerated starch by dissolving it in three parts of water to illustrate the effect of the first step. The high viscosity starch used in that test was one of the old high viscosity starches such as Perkins commonly found on the market, and was not like the starches which now come on the market

already sufficiently degenerated, like defendant's base here. It is true that in arguing for patentability of the then asserted glue *base* invention and claim, plaintiff asserted as stated on page 33 of defendant's brief, that "In this wide field Perkins found a certain point or range," but nowhere did plaintiff's counsel or the Court say that this range was limited by the 9 to 1 boil up test and 170° test as defendant's counsel erroneously assume at the bottom of page 32 and page 33 of their brief.

Defendant's counsel say (pp. 33-35) that one of the starches used at Poplar Bluff was G. T. A., "the very brand now used by defendant here" and that plaintiff differentiated from this on the ground that the patent excluded glue made from such high viscosity starch. In the first place, we submit that while some of defendant's starch may be known as G. T. A. it is not the high viscosity G. T. A. used at Poplar Bluff for the proofs show that the cassava starches now come on the market very much reduced in viscosity and it was those **old** high viscosity starches that plaintiff was differentiating in order to sustain novelty in the **base** (not the glue). Plaintiff was not differentiating **defendant's** G. T. A. which is already sufficiently degenerated. Furthermore, as the quotations show, plaintiff differentiated from Poplar Bluff because of the excessive amount of water there used, and the C. C. A. in the Solva Case differentiated the Poplar Bluff glue from Perkins, not on the ground that none of the bases at Poplar Bluff came within the 9 to 1 boil up test, etc. (as defendant's counsel erroneously allege, p. 35), but on the ground that the Poplar Bluff glue did not have the critically small amount of water (about 3 parts or less) and did not have substantially the properties of animal glue because it was not suitable for fine work on furniture and the like, the Court saying (251 Fed., 67),

> "It does not, however, yield to less than three parts or less of water and a solvent, requiring four parts of water. It appears from the evidence that it was not suitable for fine work on furniture and the like."

Defendant's counsel (p. 38) refer to plaintiff's contentions on the petition for rehearing in the Solva Case where plaintiff argued,

> "The opinion makes it clear that Perkins discovered that a starch previously suitably degenerated could be subsequently dissolved with a solvent of starch and three parts or less of water and make the glue the patents describe, and that that constituted a proper basis for process and product claims, the **process** requiring both the previous degeneration and subsequent dissolving operation and the **product** being the resulting 'starch glue as good as animal glue and suitable for veneering.' "

We see no reason to take any different position now. It may be that the **process** invention, as defined by the two step process claims there referred to, requires both the previous degeneration and the subsequent dissolving operation" but that is not saying that the resultant *glue product invention*, the "starch glue as good as animal glue and suitable for veneering" requires that it be made from starch responding to the 9 to 1 boil up test and 170° test. As the quotations show, the plaintiff there went on to point out that the glue may be made from raw starch as found on the market provided it "is in a proper state or condition of degeneration * * * to make this final glue product." Defendant can find no justification in this for assuming that its glue (made from a starch already in a proper state of degeneration to make the good as animal veneering glue), is not an infringement.

On page 40 defendant's counsel refer to Judge Sanborn's statement that

> "the Appellate Court intended to sustain only those claims of the patent which include only the two steps, and only when their use results in the Perkins glue together with those additional claims which count on such glue as a product of the two steps."

We have heretofore pointed out that Judge Sanborn used the phrase "a product of the two steps" not for the purpose of limitation (for he was not called upon to construe any of the claims) but merely to identify and distinguish the glue product from the other product, i. e., the glue base (often called glue), the claims for which he was finding invalid under the mandate.

We submit that the statement of defendant's counsel (p. 41) that Judge Sanborn's decision limited the patent to glue made from "a starch having reduced water-absorptiveness within the range measured by the tests of the patent" is wholly erroneous. Nowhere did Judge Sanborn say or imply that the glue must be made from a starch responding to the 9 to 1 boil up test or the 170° test.

Defendant's Argument With Respect to the Disclaimer, etc.

Defendant's counsel (pp. 41-47) refer to the disclaimer and argue that plaintiff disclaimed the thing defendant uses (p. 43). Plaintiff may have disclaimed the claims for the base and the process, which claims were too broad and may have been so broad as to cover the process which defendant uses, but the disclaimer was only in respect of the base and process claims, and plaintiff did not disclaim the starch veneer glue product which defendant makes, for that was a **definitely distinguishable part** of the improvements claimed in the patent and it was covered by separate claims (including claims 28, 30 and 31 here in issue) as to which no disclaimer was filed.

We have discussed the disclaimer at some length *ante* and pointed out that under the authorities the disclaimer of certain claims in a patent does not limit or affect other claims not covered by the disclaimer. When, therefore, defendant's counsel assert (p. 46) that the disclaimer disclaimed the making of glue from starch by dissolving it in an alkaline solution with three parts or less by weight of water except only when the starch, chosen as the glue-base, is "degenerated to the extent described in said Reissued Letters Patent No. 13,436," they erroneously as-

sume, contrary to all precedent, that the disclaimer applies to all the claims of the patent instead of only to those claims designated in the disclaimer.

Defendant's counsel say plaintiff is bound by the disclaimer and cite certain cases. Of course, plaintiff is bound by the disclaimer but the cases do not support defendant's position to the effect that a disclaimer with respect to the base and process claims was in effect a disclaimer in respect of the glue product claims here in suit. See footnote.

Defendant's counsel argue (p. 45), in effect, that the disclaimed second step claims cover what defendant is doing and, therefore, defendant is within the disclaimed field. If this is so, then on the same reasoning, it must be that one who uses Perkins' base (degenerated to respond to all the tests of the patent) to make the glue out of, is also within the disclaimed field because plaintiff disclaimed all the claims for the base. It is no objection that the improvement in question is embraced by an invalid claim. In O'Reilly vs. Morse, 15 How., 121, 122; 14 L. Ed., 627, the Court said:

> "It is certainly no objection to this patent, that the improvement is embraced by the eighth claim in the former one. We have already said that this claim is void," etc.

See also Graham vs. Earl, page 148, ante.

In Dunbar vs. Myers, 94 U. S., 187; 24 L. Ed., 34, there were three claims in suit. A disclaimer had been filed with respect to claim 1. This Court did not assume to hold that the disclaimer in any way limited the other claims.

In Atlantic Co. vs. Hulings, 21 Fed., 519, the disclaimer was with respect to the patent as a whole and all its claims and was not a disclaimer with respect to certain claims only, as in the case at bar.

In Bracewell vs. Passaic, 107 Fed., 469, claim 1 was entirely excided by the disclaimer, and the disclaimer also limited the word "color" in the second claim "to coal tar colors or dye wood extracts such as are referred to," etc. Therefore, after the disclaimer there was only one claim left in the patent and that claim was expressly and in terms narrowed by the disclaimer. In such a case it necessarily followed that whatever was disclaimed was disclaimed from the patent as a whole.

Defendant's counsel (pp. 48-52) refer to language use by Judge Sessions in his decisions in the Hood-Wright an West Michigan cases and in the case at bar, and by plain tiff's expert therein, and they argue in effect, that the lan guage shows that plaintiff's expert and Judge Session considered the product claims here in suit to be limite to a glue made from a base coming within the 9 to 1 boil u test and 170° test. We submit the language means no suc thing. Plaintiff conceded that the bases there used did no come within the 9 to 1 boil up test, and so when Judg Sessions held the glue made therefrom to be an infringe ment it must have been on the understanding that whethe the base responded to such tests was immaterial.

Substantially the same may be said of defendant's dis cussion of Judge Cooper's decision in the Standard case given at pages 53, 54 of defendant's brief. It was ther conceded that the base did not fall within the 9 to 1 boil u test and yet the Court held the claims infringed.

Defendant's counsel seem to admit (p. 56) that "Perkin introduced starch glue into the veneer industry" and firs "produced a vegetable glue that paralleled the anima glue solutions then employed in the veneering industry," but they claim that its wide adoption only came abou (p. 57) "when the war raised the price of animal glu to a prohibitive figure for veneering." We submit thi is calculated to create an erroneous impression for the glu was widely adopted long before the war started. Th evidence in the Solva case showed that it went into com mercial use the latter part of 1907 and when the evidenc was adduced at the trial of the Solva case in January 1915, it was shown that many millions of pounds of plain tiff's glue base had been used to make the glue out o and by over a hundred different customers, which lea Judge Sanborn to find (223 Fed., 794), that

> "The Perkins invention has been very successful millions of pounds of what is called the glue base * * are sold each year,"

and this was the situation at the beginning of the war in the latter part of 1914 and long before the United States entered the war.

Defendant's counsel contend (p. 58) that the process and product claims here are of such an exceptional character that they are necessarily inherent and inseparable like the two sides of a sheet of paper. But they are not. The 7th C. C. A. in the Solva case held these claims for the second step or process invalid while holding the glue product claims valid, thereby necessarily implying that the glue product was a separable and distinct invention from that covered by the second step process claims. If they were "inherent and inseparable" as defendants contend, then the Court would have necessarily held both groups of claims invalid. The defendants cite certain cases which, we submit, do not sustain defendant's contention. See footnote.

Defendants cite Giant Powder Co. vs. Powder Works, 98 U. S., 126; 25 L. Ed., 77. The question there was whether the claim in a *reissued* patent was for the same invention disclosed in the *original* patent and the Court, finding (p. 135) that in the original patent there was "not a hint" of the new composition claimed in the reissue, held the reissue was not for the same invention. The facts were not analogous to those in the case at bar, but, if anything, it seems to us that the case is authority for the proposition that the process and composition there involved were not inherent and inseparable.

In the Packing Cases, 105 U. S., 566; 26 L. Ed., 1172, the patent related to the preserving of cooked meat and there were two claims, one for the process and the other for the product.

The patentee reissued the patent omitting certain parts of the description which stated that the meat was compressed "while heated with cooking." The reissue was an attempt to make the claims cover the packing of the cooked meat when cold if they did not already cover it. Later a disclaimer was filed whereby the patentee disclaimed any process described and claimed by which meat is compressed into the packages in any other than a warm or heated condition, and the patentees further disclaimed any interpretation or legal construction of the words of the specification of the reissued patent broader than is conveyed by the words "The meat is first cooked thoroughly by boiling it in water, so that all the bone and gristle can be removed and the meat yet retain its natural grain and integrity."

(*Footnote continued on next page.*)

The fallacy of defendant's position is further illustrated on page 59 of their brief. Referring to the C. C. A. decision in the Solva Case they say,

> "The defect in the 'second step' claims as they stood in the original patent was that, although they defined the particular quantity of water they did not limit the selection to the particular kind of starch, chosen as the glue-base,"

and, therefore, they were anticipated by the prior art. Maybe so. But they argue from this that it was also necessary to similarly limit the glue product claims. If that were so then the glue product claims would have been invalid for the same reason and the Court would have held the glue product claims invalid as it did the second step

---

The disclaimer did not distinguish between the two claims (as in the case at bar) but disclaimed from the whole patent and specification, thus including both claims. In that case the prior art necessitated the disclaimer as to both claims, contrary to the situation here. In that case both product and process were old when the cooking was done by broiling, roasting or steaming, and neither claim covered anything new except when the cooking was done by boiling.

The Court held that both claims must fall together, not because of the disclaimer, but because of the prior art.

In Western vs. Ansonia, 114 U. S., 447; 29 L. Ed., 210, the original patent had been reissued into two patents, one for the process and the other for the product. The claim for the process read:

> "The method of insulating telegraph wire by first filing the pores of the covering and subsequently compressing this covering and thereby polishing its surface, substantially as described."

The claim for the product read:

> "An insulated telegraph wire, the covering of which has its surface polished substantially as described."

The words "substantially as described" imported the process into the product claim. There is obviously no material difference in scope between these two claims. They disclose exactly the same idea. So, of course, the two must stand or fall together when tested by the prior art. There was no disclaimer involved, disclaiming something from the process claim and not from the product claim, as in the case at bar. In that case the Supreme Court found no patentable invention in either claim when tested in the light of the prior art. The two claims fell together for that reason.

claims. Defendant's construction of the Solva decision must, therefore, be erroneous. The fact that the Court thus fundamentally distinguished the product claims from the second step claims by holding the former valid and the latter invalid, shows that the two are not inherent and inseparable as defendants contend. If the Court saved the product claims by reading into them the tests for the base (as defendant contends), then the Court would have also saved the second step claims by likewise reading into them the tests for the base.

Defendant's counsel refer (p. 62) to the opinion of the 6th C. C. A. below, where they say, "To confine the base to these two suggested examples (they are examples, not tests) would be to rewrite the specification" and defendant's counsel ask (p. 63) what does the Court mean, and defendant's counsel say that "without some such measure the patent would be invalid for insufficiency of disclosure."

Here again defendant confuses the scope of the claims with the particular examples which the patentee has given as merely illustrative of the particular method by which he prefers to carry out the invention. It is axiomatic that a patentee is not limited to the particular embodiment which he happens to describe in his specification. If this were not so a patentee in order to adequately cover such a product invention, would have to describe in his specification every possible way of making that product. The scope of a patent is not to be measured by such illustrative examples but, as stated by Walker on Patents (5th Ed., p. 221), "the claims measure the invention."

Defendant's counsel say (p. 64) that in the Solva case the yardstick applied by plaintiff was the 9 to 1 boil up test. We submit this is erroneous, and we further submit that Perkins did not reject the raw starch such as defendant uses, as defendant's counsel contend, but on the contrary he was very careful to draw his glue product claims of sufficient breadth to cover the glue when made from such raw starch.

Defendant's counsel (p. 65) apparently concede that modern cassava starches are less viscous than the starches at the date of Perkins' invention but they say there is no evidence "that such starches have reduced water absorptiveness of the range of the Perkins patent." This demonstrates that defendant's previous contentions are unsound, where defendant's counsel argue that the glue made from raw starches involved in the Solva Case and before Judges Sessions and Cooper were held to be infringements because they were within the range measured by the two tests in question. The statement of defendant's counsel above quoted also, it appears to us, contradicts their statement (p. 71) that the raw cassava in the Solva case was a starch "responding to the tests of Perkins' patent."

On page 67 defendant's counsel speak of defendant's glue as a "heavy" glue "that does not have the fluidity of the Perkins' glue." This is misleading. Of course, since defendant's base is slightly higher in viscosity than the Perkins preferred base, defendant's mixture is somewhat thicker, heavier and more viscous during the *earlier* stages of the solution, but by prolonged agitation with heat under the action of the caustic a reduction in viscosity is obtained in the dissolving step so that when the glue is finished and ready for the veneers, it is identical with glue produced by Perkins' preferred process (Rec., 36, 38). Defendant's process may be different but its product is the same and, therefore, the product claims are infringed.

When defendant's counsel assert (p. 69) that

> "it was invention to select, as Perkins did a starch of particular water absorptiveness and combine it with a particular quantity of water to make the glue of his patent,"

they are again setting up the false issue. If that was Perkins' invention it was a *process* invention and can only be covered by the process claims not in issue here. Defendant's counsel refer to this process invention and calmly

assert that defendant does not infringe it, all the while ignoring the glue product invention as covered by the claims in suit.

Defendant's counsel (p. 71) refer to plaintiff's brief in the Solva case where plaintiff said the raw cassava there used tested the same as the treated cassava and was a brand already sufficiently degenerated. Defendant's counsel would apparently have the Court believe that this raw cassava was tested by, and responded to, the 9 to 1 boil up test and 170° test, whereas there was no evidence that it came within these tests and reference to the testimony indicated shows that the test was to make what they called a "burst" of it, i. e., dissolve it in the critically small amount of water with the caustic and see if the result is good as animal veneering glue.

On page 73 defendant's counsel quote from plaintiff's brief in the Solva Case where it said, "If a starch be found in commerce already modified so that its viscosity is two or three times that of water by the Perkins' test, then it may not be necessary to further modify it." Quite true, but this is far from saying (as defendant's counsel would apparently have the Court believe) that some other starch, not so far degenerated, may not *also* be used for making the glue.

It may be noted that defendant's counsel on page 76 of their brief quote with approval Dr. Grosvenor's testimony where he states that Perkins' preferred two step process was merely a specific example, but on page 77 they refer to Dr. Grosvenor's testimony where he said, "To aid in recognition of suitable starches * * * Perkins points out several tests." Defendant's counsel do not quote the rest of Dr. Grosvenor's testimony with respect thereto and a reference to the testimony shows that he referred to four so-called tests other than the 9 to 1 boil up test and 170° test and he treated the 9 to 1 boil up test as only applicable when degenerating with acid, and he considers them all as mere indications, not limitations.

We submit that the assertion of defendant's counsel that the glue product claims in suit must have read into them the 9 to 1 boil up test and 170° test (which are merely examples of preferred bases and have only to do with the process invention) is contrary to the decisions of the 2nd C. C. A. in the Standard Case and of the 7th C. C. A. in the Wisconsin Cases (on which defendants allegedly rely) and is also contrary to the decision in the Solva Case and the decisions of Judges Sessions and Cooper, and is also most illogical and contrary to all precedent and authority.

CONCLUSION.

If the Court can find the glue as defined in the product claims disclosed in the prior art, then we submit it is its duty to point out where the glue is so found and hold the claims invalid. If, on the other hand, the Court is not able to find this glue disclosed in the prior art, then we submit that it is a **dangerous precedent** to treat these claims like a **"nose of wax"** (White vs. Dunbar, 119 U. S., 47; 30 L. Ed., 305) and read limitations into the claims, not required by any language found in the claims and contrary to long standing authority, and especially features which are old (such as the first step on the base) and therefore can not add patentability to the claims.

Ever since the decision of this Court in Providence Rubber Co. vs. Goodyear, 76 U. S., 788, it has been elementary patent law that a process and a product are separate entities and that one may obtain a patent for either or both and that a denial of his right to one or more process claims does not involve a refusal of his right to the product however made.

We think the recent decisions of the 2nd and 7th C. C. A. are erroneous in failing to accept the conclusions of this Court in Providence Rubber Co. vs. Goodyear, and also in McCarty vs. Lehigh Valley (ante) where it was held that an element can not be read into a claim for the purpose of making out a case of novelty.

It is generally understood that if an inventor has made a far-reaching contribution to the practical art, his patent will be treated with equal liberality, provided, of course, the language of his claims will so permit as they here do. The pioneer and revolutionary character of the Perkins' glue seems to have been entirely ignored by the 2nd C. C. A. and by the 7th C. C. A. in its last decision.

Prior to Perkins, the only glue suitable for furniture veneering and wood joining was the more expensive animal glue. No one knew or suspected that the high sticking power and other properties required in the wood gluing art could be obtained from starch. All experience suggested the contrary. Perkins produced such a starch glue only after years of intelligent effort and of experimentation.

This glue, **not the process of making it, or the base**, has revolutionized the art of furniture veneering.

Under the recent decisions of the 2nd and 7th C. C. A., anyone may freely make the identical glue product which Perkins first gave to the world after years of patient and extended experiment, and the patent in suit is worthless.

What incentive is left for inventors to invent if their patents for valuable and revolutionizing improvements are to be thus mutilated and practically destroyed by the Courts?

It is hard for respondent's counsel to believe that a Court which fully understands the facts, can hold that Perkins only invented a two-step process or a particular base, which is not, and the patent indicates is not, essential to make the new glue. Especially is this so when the two-step idea and the base, which are relied upon for novelty were both old in the prior art Gerson & Sachse patent.

We submit the recent decisions of the 2nd and 7th C. C. A. cannot be reconciled with principle or authority. (See footnote.)

The decision of the Second Circuit has been treated editorially as one which cannot be easily reconciled with principle or authority. In a discus-

(*Footnote continued on next page.*)

It is unnecessary to state that we were astounded at the view taken by the 2nd and 7th C. C. A. in the recent cases. Feeling the decisions to be of great importance, not only as they affect those cases and the parties thereto, but because of their effect as precedents for patent cases generally, we submitted the matter to the late Judge E. Henry Lacombe, formerly and for many years presiding Judge of the U. S. Circuit Court of Appeals for the Second Circuit, and requested his opinion thereon. Judge Lacombe's report, of course, does not have any weight as a judicial opinion, yet it so concisely sets forth the issues and what we believe to be the correct determination thereof, that we take

---

sion of this case in the Journal of the Patent Office Society, Washington, D. C. (August, 1923 issue), the editors so say. The article in full is as follows:

"Current Court Decisions.

Emerson Stringham and Manuel C. Rosa.

PERKINS GLUE COMPANY vs. STANDARD FURNITURE COMPANY, C. C. A.—2 Hough, Cir. J., 287 Fed., 109.

Perkins reissue patent 13,436, claims 13, 28, 30, 31 and 38, for glue and method of making it, held not infringed.

Infringement—Patented product made by other than the patented method. The patent was for a glue and process of making the same. The process included two steps each old in itself. Defendant's glue was made from a natural product which was the same as the substance resulting from the first step in the patented process. A District Court in a different circuit had ruled that the patent was limited to the two-step process and the product of that process. In the present suit the lower Court had held the product to be an infringement, even though produced by a different method. Reversed.

A patentably novel product is infringed by that product, irrespective of any difference in the method of manufacture. General Electric Company vs. Laco-Phillips Company, 233 Fed., 96 (C. C. A.—2; 1916). Proctor & Gamble Company vs. Berlin Mills Company, 256 Fed., 23; 263 O. G., 633 (C. C. A.—2; 1918). Dunn Wire-Cut Brick Company vs. Toronto Fire Clay Company, 259 Fed., 258; 270 O. G., 480 (C. C. A.—6; 1919). Maurer vs. Dickerson, 113 Fed., 870 (C. C. A.—3; 1902). Contra. Downs vs. Teter-Heany Development Company, 150 Fed., 122 (C. C. A.—3; 1907). In the instant case the two products seem to have been identical, leaving only the question of patentability in the product. **The holding of non-infringement cannot easily be reconciled with principle or authority."**

the liberty of quoting therefrom as follows, as part of our argument:

"I have read the patent, all the opinions and the briefs on both sides you left with me; some of them have been reread. As a result I have quite definite ideas as to the facts and status of the patent.

The facts I understand to be these. Before Perkins there was glue, prepared wholly or in part from animal substances. That glue had characteristics and capacities which made it the best known adhesive for veneering work. No glue possessing the same characteristics and capacities and made wholly of vegetable and/or mineral substances was known in the art. Perkins first produced such a non-animal glue by processes which he described in his patent. That non-animal glue was an entirely new product. It had advantages over the animal glue, because it had no odor, could be used cold and was cheaper than animal glue. That the new product was accepted by the public as a useful article is shown by its extensive use. **That its discovery involved patentable invention seems plain,** since it took several years of study and experiment to produce it.

Under these circumstances I know of no reason why such new product was not patentable independent of the process. Perkins, of course, could get no patent for it unless he disclosed to others in his specifications some way in which it could be produced or obtained, so he set forth his process or processes in the patent, and as usual, claimed everything in sight (the base, the sub steps, etc.).

Ever since the decision of the Goodyear case, I have supposed it to be elementary patent law, that a process and a product were different entities; that one might obtain a patent for either or both; and that denial of his right to obtain a patent for one did not involve a refusal of his right to the other.

So far as I can see this new product is susceptible of identification irrespective of any reference to the process. **If it has all the characteristics and capacities of the animal glue of the prior art without containing any animal substance, and is novel, useful and a result of the inventive faculties, it is patentable.** I think the C. C. A., Seventh, in the Solva Case **did intend to sustain the claims for the product irrespective of the two-step**

process. Except on this construction of its opinion, I can find no intelligent explanation of its sustaining the three product claims, Nos. 28, 30, 31.

I think that C. C. A. Seventh in the Gould Case and C. C. A. Second in the Standard Furniture Case went astray because they failed to accept the conclusions of the Supreme Court in the Goodyear Case that a claim of a patent covering a new product (and this product is new and readily distinguishable from the old vegetable sizes and pastes as well as from the old animal glue, of which it is a functional equivalent), may be sustained, although a claim or a patent for the process by means of which the patentee actually produced such new product may be rejected. I fully concur in Judge Cooper's opinion. If I were now on the bench, in some circuit other than the Seventh and the Second, in which the decisions of the C. C. A. would be constraining, **I should unhesitatingly hold as he has, despite these decisions and thus make it possible to obtain certiorari and a decision of the Supreme Court,** reaffirming or reversing its deliverance in the Goodyear case."

It seems incredible that the law applied to the facts as proved in this case can deny commensurate patent protection and the usual patent protection to the successors of the late Mr. Perkins, who gave to the art this pioneer and valuable achievement that filled a long felt want in the wood panel industry.

We submit that the decision of the 6th C. C. A. below should be *affirmed.*

GORHAM CROSBY,
Counsel for Respondent.

S. MORTIMER WARD, JR.,
of Counsel for Respondent.

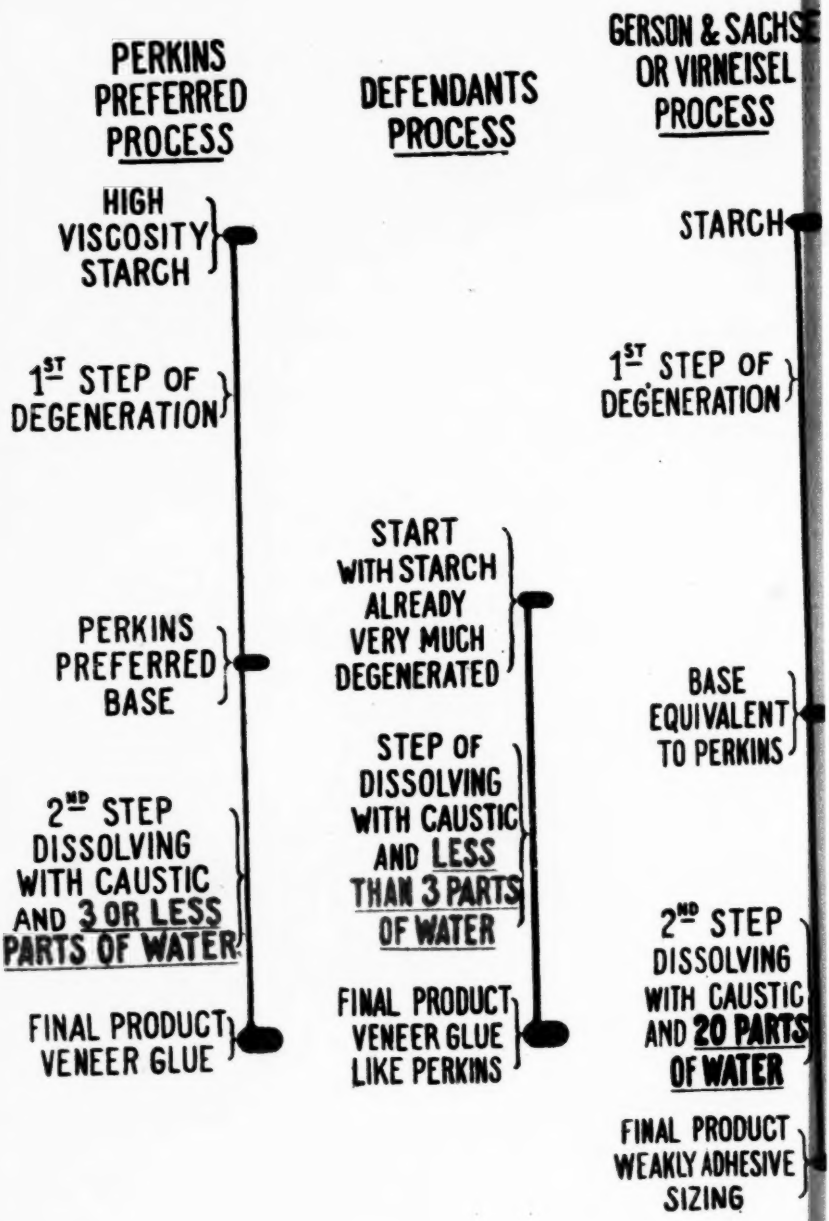
PERKINS PREFERRED PROCESS
HIGH VISCOSITY STARCH
1ST STEP OF DEGENERATION
PERKINS PREFERRED BASE
2ND STEP DISSOLVING WITH CAUSTIC AND 3 OR LESS PARTS OF WATER
FINAL PRODUCT VENEER GLUE
DEFENDANTS PROCESS
START WITH STARCH ALREADY VERY MUCH DEGENERATED
STEP OF DISSOLVING WITH CAUSTIC AND LESS THAN 3 PARTS OF WATER
FINAL PRODUCT VENEER GLUE LIKE PERKINS
GERSON & SACHSE OR VIRNEISEL PROCESS
STARCH
1ST STEP OF DEGENERATION
BASE EQUIVALENT TO PERKINS
2ND STEP DISSOLVING WITH CAUSTIC AND 20 PARTS OF WATER
FINAL PRODUCT WEAKLY ADHESIVE SIZING

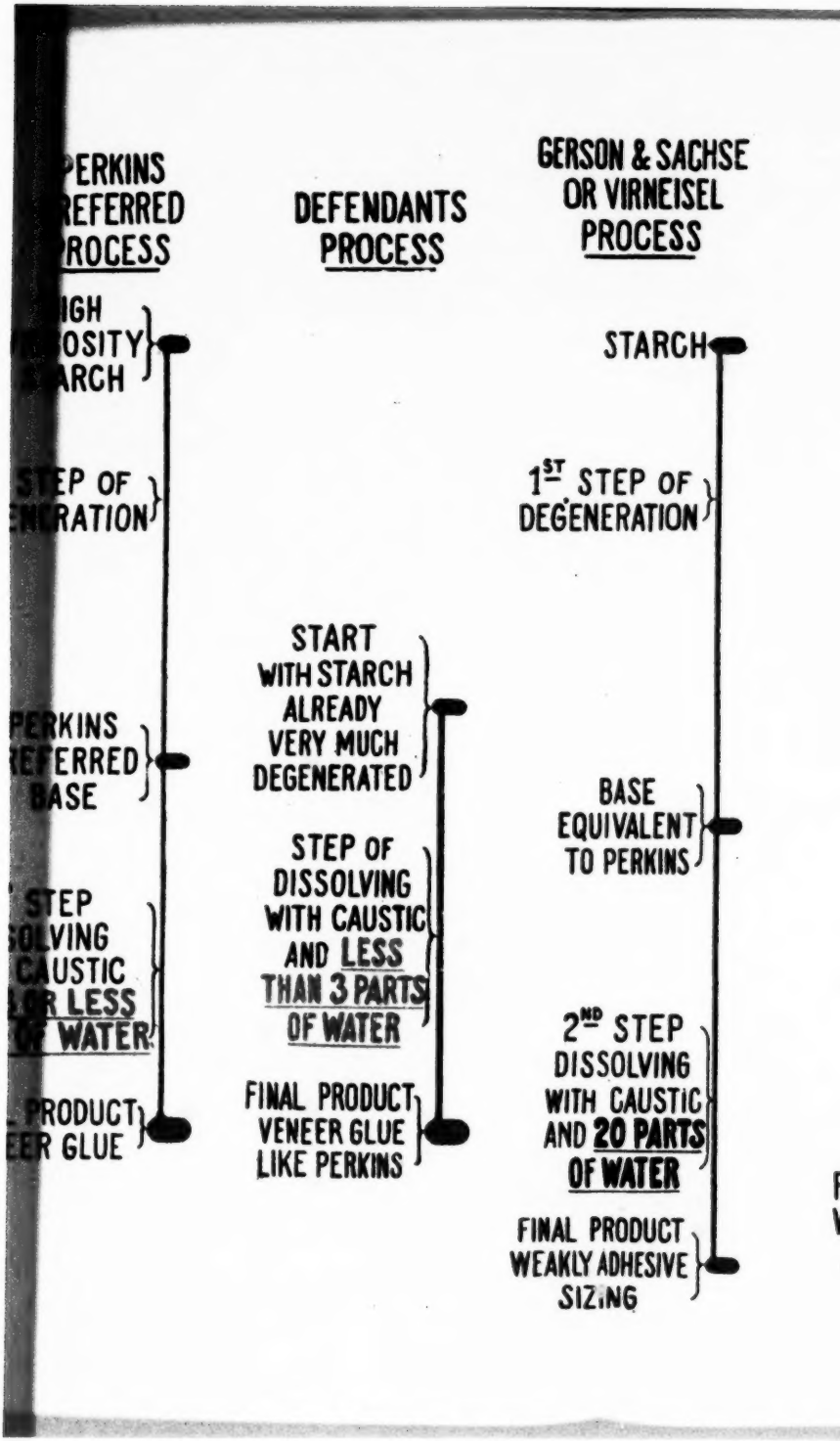
PERKINS REFERRED PROCESS
IGH OSITY ARCH
STEP OF ERATION
PERKINS REFERRED BASE
STEP OLVING CAUSTIC OR LESS OF WATER
PRODUCT ER GLUE
DEFENDANTS PROCESS
START WITH STARCH ALREADY VERY MUCH DEGENERATED
STEP OF DISSOLVING WITH CAUSTIC AND LESS THAN 3 PARTS OF WATER
FINAL PRODUCT VENEER GLUE LIKE PERKINS
GERSON & SACHSE OR VIRNEISEL PROCESS
STARCH
1ST STEP OF DEGENERATION
BASE EQUIVALENT TO PERKINS
2ND STEP DISSOLVING WITH CAUSTIC AND 20 PARTS OF WATER
FINAL PRODUCT WEAKLY ADHESIVE SIZING

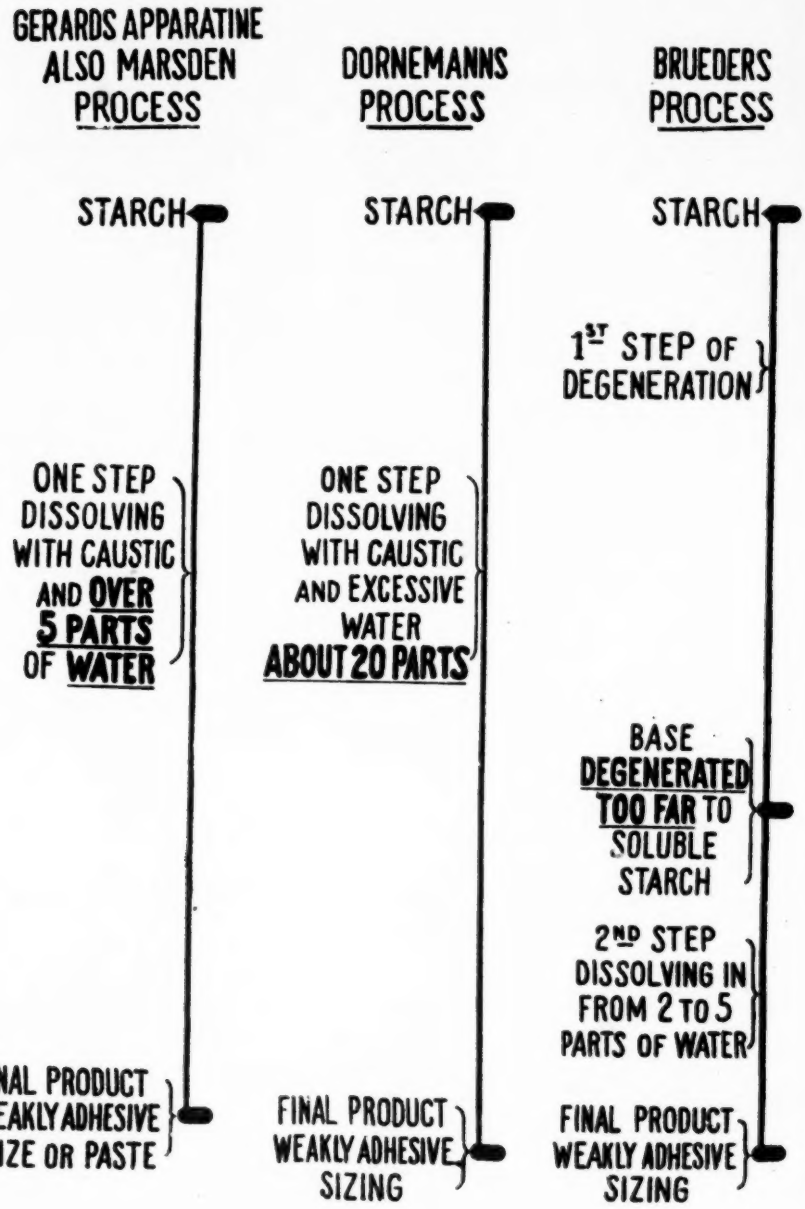
GERARDS APPARATINE
ALSO MARSDEN
PROCESS
DORNEMANNS
PROCESS
BRUEDERS
PROCESS
STARCH
STARCH
STARCH
1ST STEP OF
DEGENERATION
ONE STEP
DISSOLVING
WITH CAUSTIC
AND OVER
5 PARTS
OF WATER
ONE STEP
DISSOLVING
WITH CAUSTIC
AND EXCESSIVE
WATER
ABOUT 20 PARTS
BASE
DEGENERATED
TOO FAR TO
SOLUBLE
STARCH
2ND STEP
DISSOLVING IN
FROM 2 TO 5
PARTS OF WATER
NAL PRODUCT
EAKLY ADHESIVE
IZE OR PASTE
FINAL PRODUCT
WEAKLY ADHESIVE
SIZING
FINAL PRODUCT
WEAKLY ADHESIVE
SIZING

MAR 21 1928
CHARLES ELMORE CROPLEY
CLERK

IN THE

Supreme Court of the United States

October Term, 1927.

No. 285.

HOLLAND FURNITURE COMPANY,
Petitioner,

vs.

PERKINS GLUE COMPANY,
Respondent.

REPLY BRIEF FOR RESPONDENT.

GORHAM CROSBY,
Counsel for Respondent.

S. Mortimer Ward, Jr.,
of Counsel for Respondent.

March 20, 1928.

GALLO & ACKERMAN, Inc., 143 Liberty Street, 'Phones—Rector 7257-8.

INDEX.

PAGE

Defendant Has Shifted Its Position 1

The Characteristic That a Product Has the Properties of Another or the Capability of Doing a Certain Thing or Things May Be Used As An Identifying Characteristic in the Claims 2

There is No Rule That Limits a Patentee As to the Manner in Which He Shall Distinguish His New Product from the Prior Art 5

Defendant's Objection That the Claims Are Bad As Being for a Result is Untenable 7

Defendant's Glue is Not a Heavier Glue Than That of the Patent 7

Defendant's Glue is Identical With the Glue of the Patent 11

Defendant's Base is Degenerated 14

The Law Does Not Permit Defendant to Read the So-called 9 to 1 and 170° Tests Into the Glue Product Claims 15

The Correct Interpretation of the Product Claims in Suit 16

The Cases Cited in Defendant's Reply Brief 20

The Product Claims Are Not Limited to the So-called 9 to 1 and 170° Tests 24

The Disclaimer Question 26

Defendant's Statements With Regard to the Solva Case Are Misleading 28

Appendix, Giving Illustrations of Various Types of Product Claims 31

TABLE OF CASES.

	PAGES
American vs. Mesta, 18 Fed. (2nd), 538	24
Badische vs. Kalle, 94 Fed., 163	31
Bene vs. Jeantet, 129 U. S., 683	22
Byerley vs. Sun Co., 181 Fed., 138	3
Carver vs. Hyde, 16 Pet., 513	21
Chadeloid vs. DeRonde, 146 Fed., 988	33
Cochrane vs. Badische, 111 U. S., 293	22
Corn Planter Patent, 23 Wall., 181	7
Corning vs. Burden, 15 How., 252	21
Deering vs. Winona, 155 U. S., 286, 302	18
Dick Co. vs. Underwood, 246 Fed., 309	3
Dunn vs. Toronto, 259 Fed., 258	24, 33
Electric R. Signal Co. vs. Hall, 114 U. S., 87	7
Farbenfabriken, etc., vs. Kuehmsted, 171 Fed., 887	34
General Bakelite vs. Nikolas, 225 Fed., 539	35
General Bakelite vs. Insulate, 276 Fed., 166	35
General Electric vs. Lamp Co., 266 Fed., 994	4
General Electric vs. Laco-Phillips, 233 Fed., 96	3, 35
Goodwin Co. vs. Eastman Co., 213 Fed., 231	5
Hemolin Co. vs. Harway Co., 131 Fed., 483	36
Hobbs vs. Beach, 180 U. S., 383	7
Holliday vs. Pickhardt, 29 Fed., 853	32
Howe Co. vs. Needle Co., 134 U. S., 388, 394	16
Hoskins Co. vs. General Electric, 212 Fed., 422	4
Incandescent Lamp Case, 159 U. S., 468	22
Keasbey & Mattison vs. Carey Co., 139 Fed., 571	33
Klein vs. Russell, 19 Wall., 433, 466	19
Kraft Cheese Co. vs. Pabst, 17 Fed. (2nd), 787	32
Matheson vs. Campbell, 78 Fed., 910	24, 25
Maurer vs. Dickerson, 113 Fed., 870, 874	24, 34
Minerals Separation vs. Butte, 250 U. S., 336	20
Mitchell vs. Tilghman, 19 Wall., 287	7
Motion Picture Co. vs. Universal, 243 U. S., 502, 510	26
O'Reily vs. Morse, 15 How., 62	21

PAGES

Parke-Davis & Co. vs. Mulford, 189 Fed., 95 3
Pickhardt vs. Packard, 22 Fed., 530 32
Polygon Corp. vs. Kant-Rust, 292 Fed., 569 31
Products Co. vs. Milk Co., 293 Fed., 941 36
Rubber Co. vs. Goodyear, 9 Wall., 788, 795 19
Rumford Works vs. New York Co., 134 Fed., 385 33
Sackett Co. vs. Rutkowsky, 167 Fed., 138 3
Sporting Goods Co. vs. Haskell, 217 Fed., 407 4
Standard Co. vs. American Co., 203 Fed., 508 4
Temco vs. Apco (decided by this Court Jan. 3, 1928) 17
Theroz Co. vs. Chemical Co., 14 Fed. (2nd), 629 32
Topliff vs. Topliff, 145 U. S., 171 19
Tyler vs. Boston, 7 Wall., 327 21
Union Carbide Co. vs. Carbolite, 188 Fed., 334 35
Westinghouse vs. Boyden, 170 U. S., 534 7
Wood vs. Underhill, 5 How., 1 20

IN THE

Supreme Court of the United States

OCTOBER TERM, 1927.

No. 285.

HOLLAND FURNITURE COMPANY,

Petitioner.

vs.

PERKINS GLUE COMPANY,

Respondent.

REPLY BRIEF FOR RESPONDENT.

We believe the reply brief filed by defendant (Petitioner) calls for some comment, for the position taken by defendant therein seems untenable.

Defendant now alleges (Reply Brief, p. 1) that it was not its position below that the product claims are limited to process features and it alleges that the Court below erred in assuming that to be the fact. Now we submit the Court below did not err in this respect and we submit it was defendant's position below that the product claims are limited to process features, for on page 2 of its Brief below, after referring to its contention that the prior art disclosed the treatment of raw starch, defendant's counsel said:

> "It is also **defendant's position** that the inventive thought disclosed in the patent affirmatively rejected

> and the patent did not cover, such treatment of raw starch; that the **idea of the patent comprehended a two-step process in which the first step consisted in treating the raw starch to reduce its viscosity to within a defined and measurable range**, and the second step, old in its application to raw starch, consisted in dissolving this degenerated starch in the caustic solution, containing three parts or less of water, to make glue."

This was the position taken by the 2nd C. C. A. in the Standard Case and the 7th C. C. A. in the Wisconsin cases on which defendant allegedly relies, but defendant now finding this position untenable, attempts to shift its position.

Defendant says "Perkins' product cannot be identified by the use to which it is put." It may be that if the product claimed is, *per se*, old, a product claim therefor cannot be sustained on the ground that it is applied to a new use. But we contend that the product here claimed is new in and of itself and independently of the use to which it is put, and independently of whether it be made from a base coming within the so-called 9 to 1 boil up and 170° tests.

The Characteristic That a Product Has the Properties of Another Product or the Capability of Doing a Certain Thing or Things May Be Used as an Identifying Characteristic in the Claims.

Defendant, however, further says (Rep. Brief, p. 1) that Perkins' product cannot be identified by "its ability to do the work of animal glue." This is a different proposition. If by this it is meant that a new product may not be distinguished from the prior art by a statement of its having the properties of a certain other product or by a statement of its having the capability of doing a certain thing or things, then defendant's position is not sustained by any authority and is negatived by many authorities which might be cited *ad nauseum*.

For example, in Dick Co. vs. Underwood, 246 Fed., 309 (affirmed 252 Fed., 990), one of the essential characteristics of certain of the product claims in suit was

> "a stencil blank capable of being stencilized."

In Parke, Davis Co. vs. Mulford, 189 Fed., 95, one of the identifying characteristics of claim 2 there in suit was

> "a substance possessing the herein-described physiological characteristics and reactions of the suprarenal glands in a stable and concentrated form," etc.

In General Electric vs. Laco Philips, 233 Fed., 96, the 2nd C. C. A. held valid claim 3 which, as one of the identifying characteristics, stated that the filament was

> "capable of incandescent efficiency at the rate of less than 1 watt per candle power and substantially free from perceptible disintegration at that efficiency."

In Byerley vs. Sun Co., 181 Fed., 138 (affirmed 184 Fed., 455), claim 2 was held valid and identified the new petroleum product as one having, among other characteristics, the

> "characteristics belonging to asphaltic residual products from a prolonged exposure of petroleum tar to a pitch-forming non-coking temperature in a still with agitation of said tar, and exposure of the same to air in contradistinction to previously known material or artificial products of a more or less asphaltic character, substantially as set forth."

In Sackett Co. vs. Rutkowsky, 167 Fed., 138, claim 3 for a substitute for lath and plaster, contained as one of the identifying characteristics,

> "the boards being stiff, and firm, but sufficiently soft to admit the driving of nails through them to fasten them to the studding, substantially as set forth."

In General Electric vs. Lamp Co., 266 Fed., 994, one of the claims for an incandescent lamp had as its identifying characteristic,

> "the filament being sufficiently large and the heat conductivity of the filling being sufficiently poor to permit the lamp to be operated with a filament temperature in excess of that of a vacuum tungsten lamp operating at an efficiency of one watt per candle and with a length of life not less than that of such a lamp,"

and as to the claim of indefiniteness, the Court said (p. 1000):

> "It was unnecessary to do more than state the limits of invention in terms of result, because the results desired are not functional, and do indicate limits in terms of lamp life and candle power which are likewise presumably quite familiar to any competent electrician."

In Sporting Goods Co. vs. Haskell Co., 217 Fed., 407, the claim for a golf ball identified the enclosing shell of gutta percha as

> "of such thickness as to give it the required rigidity."

In Hoskins Co. vs. General Electric, 212 Fed., 422 (affirmed 224 Fed., 464), one of the product claims sustained identified one of the ingredients of the alloy as

> "more than 50 per cent. of metal having the properties of nickel and cobalt."

In Standard Co. vs. American Co., 203 Fed., 508, the product claim stated the product was a black, semi-solid asphaltic flux, etc.,

> "possessing the characteristics of a product obtained by prolonged exposure of petroleum residuum," etc.

In Goodwin Co. vs. Eastman Co., 213 Fed., 231, the 2nd C. C. A. held claim 10 valid, which defined one of the essential characteristics of the photographic film as a film possessing

> "the following essential properties of glass-plate supports, viz., insolubility in developing fluids, insensibility to heat and moisture, imporosity of structure, and hardness, smoothness, and brilliancy of surface."

When the claims characterize the glue as a wood and fiber glue or as a glue having the properties of animal glue, that is not referring to its use. That is characterizing the glue, not by the use to which it may or may not be put, but by its physical characteristics, and it is by the **combination** of such physical characteristics, with the statement of ingredients and proportions set forth in the claims that the product is differentiated from the prior art and infringement is to be determined.

There Is No Rule That Limits a Patentee as to the Manner in Which he Shall Distinguish His New Product from the Prior Art.

The courts have very properly refrained from laying down any rule as to the manner in which a new product shall be claimed. This is not only wise, but necessary, for new product inventions are constantly appearing which require that they be claimed in a new manner if the patents are to give protection commensurate with the actual invention. A patentee should not be forced by arbitrary rules to limit his claims so that they may not cover the invention to its fullest extent.

The identifying characteristics used are numerous and vary widely in character, and new ones are constantly appearing. In the past identifying characteristics have in-

cluded (1) a statement of certain ingredients, (2) a statement of certain proportions in respect of one or more of the ingredients, (3) a statement that the product has certain properties, i. e., is capable of doing certain things, (4) a statement that the product responds to certain tests, either physical or chemical or both.

The product may be claimed solely by any one or more of the above, and the novelty may lie in one or more of the characteristics specified in the claim, or if the claim specify a combination of any two or more characteristics each of the characteristics may be old, *per se*, in which case the novelty consists in providing a product having such combination of characteristics. (The great variation in the manner of claiming new products is illustrated by the cases hereinbefore cited as well as by the cases cited in the "Appendix" at the end of this brief.)

So in the case at bar (1) glue having substantially the properties of animal glue was old, i. e., animal glue; (2) a wood and fiber glue was old, i. e., animal glue; (3) a glue formed of a starchy carbohydrate or containing amylaceous (starch) material was old, e. g., the Gerson & Sachse or Dorneman weakly adhesive sizes; (4) a glue containing 3 or less parts of water was old, i. e., animal glue; (5) a glue containing alkali metal hydroxid (caustic alkali) was old, e. g., Gerson & Sachse or Dorneman; (6) a viscous semi-fluid and unjellified glue was old, i. e., animal glue. But no one before Perkins had combined these characteristics in a single product as specified in the claims in suit. No one before Perkins had provided (1) a wood and fiber glue or a glue having substantially the properties of animal glue and which was also composed of (2) starch and (3) water and (4) caustic alkali, and (5) the proportion of the water being about 3 parts or less, and it was by so combining such a plurality of characteristics as set forth in the claims that Perkins revolutionized the art of furniture veneering gluing and saved the industry millions of dollars yearly.

Defendant's Objection That the Claims Are Bad as Being for a Result Is Untenable.

Practically every product is the **result** of some process or processes, but it is nevertheless still patentable as such, for this Court in Rubber Co. vs. Goodyear, 76 U. S., 788, after stating that a machine and its product are independently patentable, said:

> "The same remarks apply to processes and their **results.** Patentability may exist as to either, neither or both according to the fact of novelty or the opposite."

Defendant's counsel confuse this well settled rule of law with the rule that a **function of a machine** is not patentable as such. On page 6 of their brief they cite the Corn Planter Patent, 23 Wall., 181, and the objection there was that the claim was merely for the **function of a machine**, although in that case called a result. The cases of Electric R. Signal Co. vs. Hall, 114 U. S., 87; Hobbs vs. Beach, 180 U. S., 383; Westinghouse vs. Boyden, 170 U. S., 534, and Mitchell vs. Tilghman, 19 Wall., 287 (also cited in Defendant's Reply Brief), are distinguished in the same manner.

Defendant's Glue Is Not a Heavier Glue Than That of the Patent.

It is obvious that even following the particular two step process which Perkins described in great detail in his patent, that the resulting product would vary considerably in viscosity. For example, he specifies the use of a range of water from 1 to 3 parts and, of course, the viscosity of the resulting Perkins' final glue will vary accordingly. Also even the so-called 9 to 1 boil-up test and 170° test permit of considerable variation in the viscosity of the starch base to be used. For example, according to the 9 to 1 boil-up test, a base may be used which registers between 16 and

48 on that test (Rec., p. 250, line 2 and line 25). These preferred ranges, therefore, necessarily result in the production of final glues of different viscosities when following the preferred examples set forth in the Perkins' specification. This is all conceded by defendant's expert. Thus defendant's expert after referring to the product produced by dissolving the Gerson & Sachse base in Perkins' proportion of water and comparing this with one sample of Perkins' final glue, said (Rec., p. 184) the Gerson & Sachse base "makes a thicker product, made up in exactly the same way," but to demonstrate that it was still within the Perkins' descripton, he said

> "there is a range within the description which Perkins has given in his patent, there is quite a wide range of possibility, and the thing that is appreciably thicker in mixture than his product may still come within his description."

The experts on both sides are entirely in accord on this point. Plaintiff's expert, Dr. Grosvenor (Rec., pp. 72, 73), in comparing the **usual** viscosity of Perkins' glue with the **range** of viscosity of certain of Perkins' glues which he had observed by varying the length of agitation and heat, etc., stated that he had seen "the actual viscosity of the glue itself" by such adjustment of length of agitation and heat, vary from 250,000 to 60,000, whereas the "**usual**" viscosity of Perkins' commercial product was "in the vicinity of say 125 or 126,000; it swings somewhat up and somewhat below that; that is purely a question of the practical working of the glue on the veneers" and defendant's finished glue was 156,000, i. e., right in the middle of the range indicated by the tests made by Dr. Grosvenor on certain samples of Perkins' glue.

Therefore, defendant's statement of Dr. Grosvenor's testimony (p. 37 of Defendant's Reply Brief) is misleading. They there merely compare the viscosity of defendant's glue with the **usual** viscosity of Perkins' **commercial** product and ignore the fact the patent indicates a wider range

as testified to by both experts and that the viscosity of defendant's glue falls well in the middle of this range.

Defendant's counsel (p. 36 of their Reply Brief) refer to Grossman's testimony (Rec., pp. 51-52, 59-61) and allege he testified that the Kane base makes a much heavier glue than Perkins, requiring special machinery to handle it and that defendant's glue in the spreading machine is heavier than the Perkins' glue. This, we submit, is contrary to the testimony of defendant's own witness Stephan, who was the manager of the defendant, for in comparing defendant's Kane glue here involved with Perkins' glue, which he had also used, he said (Rec., p. 403):

> "So far as I know it was all used in practically the same way and mixed up practically the same. It was all used for the same general class of work and all put on in the regular way with the same spreaders, same machinery. So far as I know it all behaved the same way."

We submit Grossman's testimony referred to does not warrant the conclusions stated by defendant's counsel. Grossman's testimony (Rec., pp. 51-52) is addressed to the behavior of the mixture during the early stages of the process and not to the glue when finished. He says:

> "Our stuff is heavier, and the heavier the glue base from a business standpoint of viscosity, the quicker it drops to the bottom of the kettle, **before it is cooked up.**"

In other words, he is referring to the condition **before the glue is cooked up** and not after the dissolving is completed. It is true that Grossman also states (Rec., pp. 60, 61) that

> "our glue **base** cooked up—and put in a spreading machine, is heavier than the Perkins glue **base**, proving that there is less degeneration in a raw hard starch than one which has been treated and softened." * * *
>
> "It is heavier for the same amounts of water added."

Grossman may have been referring to the base only, but, if not, he was obviously comparing defendant's glue **only** with **commercial** samples of Perkins' glue when mixed with one given amount of water, and not with the range of water and viscosity permitted under the Perkins' description as hereinbefore pointed out.

That is to say, defendant's only attempt to distinguish the finished glues is to assert that defendant's glue is somewhat heavier than the particular commercial samples of Perkins which were used for comparison. None of defendant's witnesses testified that defendant's finished glue was in any way different from glue which would fall within the Perkins' range (as to the glue). This was agreed to, as above pointed out, by the experts for both sides.

Regarding the statement that special machinery is required to mix defendant's glue, this merely means that the mixture may be somewhat heavier in the first stage of the dissolving process. It does not mean that there is any difference in the glue when it is finished. When finished, both glues are used on the same kind of spreading machinery, and even as to the dissolving operation, defendant's witness Grossman admits (Rec., p. 59) that

> "where a man contemplates a change from the Perkins to the Kane base, he tries it out on a Perkins convertor."

And defendant's witness Stephen admits that both glues "mixed up practically the same" and were "put on in the regular way with the same spreaders" (Rec., p. 403).

Judge Sessions, before whom the case was tried, after hearing the testimony of Mr. Grossman referred to, and seeing the witness, found as a fact that "defendant's **final** product * * * **is identical with the glue of the patent**" (Rec., p. 339).

Defendant's Glue is Identical With the Glue of the Patent.

The claims in suit are on their face limited to a "wood and fiber glue" or a glue "having substantially the properties of animal glue." The meaning of these terms is made very clear in the specification. Thus the patent states (Rec., p. 250, line 113):

> "In the preferred form described, my improved glue is transparent and free from odor, and is very stable after mixing for use, it is instantly adhesive to clean surfaces, its cohesion is very great but not sufficient to overcome its adhesion and its viscosity is lasting and low enough to permit ready application, but so proportioned to its cohesion that it is capable of being applied by machinery like hide glue, but still very long, tough fibers are produced if freshly joined surfaces are separated. I have found that, owing to the breakage of these filaments, quick separation of such surfaces produces a crackle like electric sparks.
>
> My glue will produce joints which are practically unaffected by natural humidity and which are unaffected by prolonged dry heat."

The patent makes it clear (Rec., p. 248, line 73, and Rec., p. 247, line 92) that although other starches may be used, cassava starch is preferred, and (Rec., p. 249, lines 91-103) less than about 3 parts of water with the caustic solvent is used, yet the resulting glue has "a semi-fluid consistency" much superior to that obtained by the use of water alone and which is not "jelly-like and tough," the alkali uniting with the starch and small amount of water forming a glue "of very tenacious properties."

The patent further points out (Rec., p. 248, line 113, and p. 249, line 35) that the new glue is a colloidal compound, and by comparison with prior art starch adhesives, that the new glue (Rec., p. 250, line 104)

> "parallels the animal glue solutions now employed industrially, in respect to water contents and physical

> properties in application, and is equal or superior as to strength and permanency,"

and instead of being unfit for "wood joint work" like prior starch adhesives (Rec., p. 250, line 96) and containing so much water (Rec., p. 250, line 89) as to involve

> "changes in drying methods, or in drying time, or in risks of injury to the material due to warping by the extra water, all of very serious consequence."

the new glue is one which has (Rec., p. 247, line 27)

> "the necessary relative 'tack,' viscosity, cohesiveness and tenacity to spread and adhere properly when applied as wood glue,"

and is one which is not like (Rec., p. 247, line 39) the prior paste, etc., which is weak and diluted and which

> "has practically no power and would be wholly unfit for most classes of work, especially wood joints."

The new glue is one (Rec., p. 247, line 46) which does not

> "have the disadvantages just pointed out, but which will be exceptionally tenacious and powerful but still amply fluid for easy application, and which can be economically and easily produced,"

and (Rec., p. 247, line 100) produces a joint the

> "strength of which when dry is superior to the lateral strength of wood fiber. The prepared glue is very stable in its physical condition, so much so, that it may be kept for days or even weeks after it has been mixed for application without fermentative change,"

and (Rec., p. 248, line 3) the

> "glue is free from the complications which attend the use of an adhesive which must be cooked or warmed before use, or kept warm during use, and is more pow-

> erful than that which results from the treatment of starch in other ways. My improved glue when made in its best form and properly applied will not only tear away the wood at some point in the wood joint produced by the use of this glue, but will tear away the wood at many points whether with or against the grain,"

and (Rec., p. 247, line 53) the glue

> "may be practically used for the same purposes as the best animal glue, and possess certain great advantages of permanency to weather and temperature variations far superior to those of animal glue."

Plaintiff's expert not only testified positively that defendant's glue had all the characteristics contained in the claims in suit (Rec., pp. 37, 38), but he also testified (Rec., p. 38) that the final glue made by the defendant was

> "the same actual and industrial technical product as the final glue of the patent in suit,"

and (Rec., p. 35)

> "It had all the fluidity, penetration, adhesive and cohesive characteristics of the glue of the Perkins patent, and substantially all those of the animal glue for veneering work,"

and that it produced joints having the same high joint strength as produced by the Perkins glue. **Defendant introduced no testimony to the contrary.**

Instead, defendant's witness Stephan, manager of the defendant company, in comparing the characteristics of the various vegetable glues he had used, including not only Perkins glue, but also the so-called International glue (which defendant admitted to be an infringement) and the so-called Kane glue here involved, said (Rec., p. 403):

> "So far as I know it was all used in practically the same way and mixed up practically the same. It was all used for the same general class of work and all put on in the regular way with the same spreaders, same machinery. So far as I know it all behaved the same way; it behaved well."

Defendant's Base is Degenerated.

We believe we have conclusively demonstrated by the testimony of defendant's own witnesses that defendant's Kane base is very much degenerated (see pp. 92-97 of our Main Brief). We might add, however, that plaintiff's expert not only testified that it was degenerated (Rec., p. 36), but he also carried out a series of tests showing that while high viscosity starches prepared by him had viscosities of from 264 to 532, the defendant's Kane base on the same scale only had a viscosity of 95 to 105 (Rec., pp. 542, 543).

The experts agree that viscosity is a measure of the degeneration. Grossman admits that certain starches run as high as 200 to 220 (Rec., p. 518), and this was on modern starches, and the modern Royal showed a viscosity of 166 (Rec., p. 515), while the defendant's Kane base was much more degenerated. He at first alleged it had a viscosity of about 145 and never below 140 (Rec., p. 79), but in his later testimony he stated the viscosity of the Kane base to be 100 (Rec., p. 512) instead of 140, and he also stated that the Kane base ran uniform, i. e., it was an absolutely uniform product (Rec., p. 518). That is, the defendant's Kane base is one carefully **selected** for uniformly low viscosity. Every batch is checked up in the laboratory before being sent out, to be made into the glue (Rec., p. 518), and, in the language used by defendant's counsel, it is not "any" starch.

At pages 32, 33 of its reply brief, defendant refers to certain of the raw starches sent to Poplar Bluff about 1905, and plaintiff's argument in the Solva case that they were not degenerated and not usable to make the veneer glue without material degeneration, and defendant argues that it uses raw starch and, therefore, is using what plaintiff said was not usable. But defendant does not use any such high viscosity starch. Since 1905 the viscosity of cassava starches as they come on the market has been greatly re-

duced. Such high viscosity starches have not been available in later years (Rec., p. 41). The viscosity of the cassava starches as they come on the market has fallen off 40 to 50 per cent. on the average (Rec., pp. 42, 71). It was the high viscosity starches of 1905 and thereabouts which Perkins called "ordinary" and which he indicated as unsuitable without preliminary degeneration, and it was such high viscosity starches which plaintiff was differentiating in the Solva case. Defendant's starch base is very different. It is one of the modern cassava starches which comes on the market already sufficiently reduced in viscosity as explained in our main brief at pages 92-97.

Whether or not defendant's base falls within the two so-called tests, it is, under the patent law, the **full equivalent** of the Perkins preferred base for with it defendant obtains a final glue which (as the Court held) "is **identical** with the glue of the patent." Defendant's base is, therefore, "equally good" with Perkins preferred base and, therefore, as the Courts have stated, is the legal **equivalent** of Perkins preferred base for the purpose of making the final glue.

The Law Does Not Permit Defendant to Read the So-called 9 to 1 and 170 Degree Tests Into the Glue Product Claims.

We know of no rule which permits a patentee, when claiming a product independently of the process to characterize one of the ingredients by tests to which it can no longer respond. In the case at bar, when the glue is once made (even when made from a starch which at the start responds to the 9 to 1 and 170° tests) the starch can no longer respond to such tests for it has been changed by the dissolving process so that such tests are no longer applicable. Defendant refers (p. 2) to "choosing an ingredient of a specified degree of degeneration," but when the glue is once made the starch can no longer have any such specified degree of degeneration.

The specified degree of degeneration is a characteristic of the **process** not of the product. The process may be

characterized as one which starts with a base of the specified degree of degeneration, but it is impossible to characterize the glue as containing starch having the specified degree of degeneration, for in no case would the starch have the specified degree of degeneration in the final glue.

Defendant's attempt to read tests for the base into the glue product claims is, therefore, an attempt to read process features into the claims and not characteristics of the final glue product.

Defendants cannot so read limitations into the claims. This we have discussed at some length, beginning at page 132 of our main brief, but to the cases there cited we may add Howe Co. vs. Needle Co., 134 U. S., 388, 394.

The rule is necessary, otherwise how is the public to know what the claims cover. The 2nd C. C. A. in the Solva case and the 7th C. C. A. in the Wisconsin cases read the two-step process into the product claims, and not the so-called tests for the base. The defendant here now attempts to read the so-called tests for the base into the product claims and not the two-step process. Judge Geiger apparently attempted to partly read both sets of limitations into the product claims. The next infringer may omit some other detail of the process and attempt to read that into the claims to escape infringement. And there is no end to it. Each infringer cannot be permitted to pick out the particular non-essential details which he omits and have these read into the claims for the purpose of escaping infringement.

The Correct Interpretation of the Product Claims in Suit.

As stated at page 132 of our main brief:

> "The words in a claim may be interpreted where they are reasonably capable of different interpretations in order to determine what the language means, but we submit elements or features not referred to in a claim cannot legitimately be read into the claim for any purpose."

So when a product claim does not give proportions (and many of them do not), there is always implied the use of

suitable proportions. Likewise where a product claim has as one of its distinguishing features an ingredient falling within a certain class, there is implied the use of a **suitable** ingredient of that class. And in mechanical cases where a mechanical element is set forth in a claim without setting forth its mechanical connection to other parts, there is implied **any suitable** connection.

This was in effect the holding of this Court in the recent case of Temco vs. Apco, decided January 3, 1928 (apparently not yet reported). There the objection was raised that the claim was incomplete and void for want of a statement as to how the leaf spring was to be connected and guided, but this Court said:

> "Reading the claim with the specifications and the drawings, which are both clear (Howe Machine Co. vs. National Needle Co., 134 U. S., 388, 394), its addition to the combination of coiled springs interposed between the leaf-spring hangers having vertical movement and guided by stanchions comprehends the link as shown in the drawings **or any suitable connection** between each leaf spring and its hanger and casing surrounding the coiled spring which is interposed between the leaf spring and the axle and ground wheel. It does not seem to us that the claim is vague; nor do we find nullifying incompleteness in it. Turril vs. Railroad Company, 1 Wall., 491, 510; Rubber Company vs. Goodyear, 9 Wall., 788, 795; McClaim vs. Ortmayer, 141 U. S., 419, 425; Walker on Patents (5th Ed.), sec. 185."

In other words, the Court did not hold the claim limited to the particular arrangement illustrated in the specification, but held that it comprehended "any suitable connection" for the purpose.

The very fact that the so-called tests for the base were omitted from the product claims in suit shows that both the patentee and the Patent Office contemplated that the glue, as characterized in the claims, was covered when made from any suitable starch base.

Defendant on page 15 of its Reply Brief argues that the Court below erred in treating the claims in this manner,

but we submit the Court below was right when (in discussing defendant's contention that the claims must be limited to a specific starch base) it said (Rec., p. 649):

> "We do not agree. We are analyzing a result into its elements. Not to save from anticipation, but to make operative and intelligible, there is an implied limitation to that base which, when combined as stated, will give the result stated. In other words, out of the variety of starchy carbohydrates we must select one suitable for this combination. In this there is no forbidden vagueness."

The specification (not the claim) must, of course, describe at least one specific starch suitable for the purpose (and this it concededly does) in order that those skilled in the art may be advised of at least one way of reaching the result, but when the claims in suit are not limited to such details, such detils are not to be read into the claims even though without them the claims may be broad enough to cover an inoperative product as well as the new product. This Court in Deering vs. Winona, 155 U. S., 286, 302, said:

> "Defendants further insist that the twentieth claim of this patent is invalid, by reason of the fact that, if the board d^1 be construed, as it evidently must, as a board pivoted to the butt-adjuster, the combination is incomplete and inoperative, because the means by which it is held and controlled are not stated in the claim; and if the additional elements, namely, the arms d^2, d^3, and d^4 be read into it, it becomes the same as the twenty-first claim, and the novelty of the claim must be made to depend upon the peculiarities of the board d^1. Admitting that additional elements are necessary to render the device operative, it does not necessarily follow that the omission of these elements invalidates the claim, or that the precise elements described in the patent as rendering it operative must be read into the claim. If Steward were in fact the first to invent the pivotal extension to a butt adjuster, he is entitled to a patent therefor, though the infringer may make use of other means than those employed by him to operate it. Webster Loom Co. vs. Higgins, 105 U. S., 580, 584 (26, 1177, 1179). In such case any appropriate means

> for making it operative will be understood. Otherwise the infringer might take the most important part of a new invention and, by changing the method of adapting it to the machine to which it is an improvement, avoid the charge of infringement. The invention of a needle with the eye near the point is the basis of all the sewing machines used; but the methods of operating such a needle are many, and if Howe had been obliged to make his own method a part of every claim in which the needle was an element, his patent would have been practically worthless."

And so in the case at bar, to read into the product claims the 9 to 1 and 170° tests is to render the patent absolutely worthless for it enables anyone to make the identical glue which Perkins first gave to the world in the easiest manner possible. This Court in Rubber Co. vs. Goodyear, 9 Wall., 788, 795, said, "a patent should be construed in a liberal spirit to sustain the just claims of the inventor," and

> "liberality, rather than strictness, should prevail where the fate of the patent is involved, and the question to be decided is whether the inventor shall hold or lose the fruits of his genius and his labors. Corning vs. Burden, 15 How., 269; Battin vs. Taggert, 17 How., 75, 15 L. Ed., 37."

And in Klein vs. Russell, 19 Wall., 433, 466, this Court said:

> "The Court should proceed in a liberal spirit so as to sustain the patent and the construction claimed by the patentee himself, if this can be done consistently with the language which he has employed."

And in Topliff vs. Topliff, 145 U. S., 171, this Court said a patent ought not to be defeated "by the application of artificial rules of interpretation." Under the facts as proved in this case, and considering the pioneer and revolutionary character of the invention and its great savings to the industry, and the liberal treatment which should be accorded such inventions as set forth in the decisions of this Court, we submit the interpretation given the claims by the Court below was right.

The Cases Cited in Defendant's Reply Brief.

Defendant cites Wood vs. Underhill, 5 How., 1. We submit this case supports our contention rather than defendant's. It is true that the court there said that the **specification** should state proportions sufficiently exact to enable others to make use of the invention, i. e., the **specification** must describe with sufficient detail at least one method of reaching the result, but the court did not hold that the patentee was limited to the precise proportions, etc., recited in the specification or that the **claim** must be limited to such precise proportions, etc. The claim gave no proportions and read as follows:

> "I claim as my invention the using of fine anthracite coal, or coal dust, with clay, for the purpose of making brick and tile as aforesaid, and for that only claim letters patent from the United States."

It being pointed out, however, that the specification suggested suitable proportions, etc. (although at the same time indicating that variations might be made), the Court said:

> "The Circuit Court, therefore, erred in instructing the jury that the specification was too vague and uncertain to support the patent, and its judgment must be reversed."

The defendant cites Minerals Separation vs. Butte, etc., 250 U. S., 336.

This Court (as therein indicated, p. 340) had previously held that the patent must be confined to the "proportions often described in the testimony **and in the claims** of the patent as critical proportions amounting to a fraction of 1 per cent. on the ore." The Court properly held the patentee limited to his **claims**. Applying the same principle to the case at bar, Perkins is limited to the 3 parts or less of water specified in the claims. That was the critical proportion and plaintiff is not seeking any broader construction.

We understand, however, that the court did not assume to find that the patent was limited to the particular oils mentioned in the specification, for indeed the holding of non-infringement was based on the finding that other and less effective oils would satisfy the claims, but since they were used in excess of 1% (the limitation in the claims) there was no infringement. The case, therefore, sustains our position that the claims are not limited to the particular quality of ingredients specified in the specification as preferred.

Defendant cites O'Reilly vs. Morse, 15 How, 62, where one of the claims was held invalid as being for a mere **function of a machine.** We have already pointed out that the function of a machine is to be treated differently from the product of a process.

Defendant cites Corning vs. Burden, 15 How., 252, in which the question also was as to whether the patent was for a machine or the function of a machine or process, and the Court held that Burden's patent was for a machine: Substantially the same may be said with respect to Carver vs. Hyde, 16 Pet., 513. The function of a machine may not be patentable as such but the result of a process, if new, is patentable as such. This was the holding by this Court in Rubber Co. vs. Goodyear, *ante*. Defendant quotes from Tyler vs. Boston, 7 Wall., 327, where the Court said that where a patent is for new substance it should state the component parts with clearness and precision. The particular example given in the specification was crude fusel oil 1 part and kerosene 1 part. The patent stated, however, that naphtha, etc., might be substituted for the kerosene and that the proportion of fusel oil might be varied. The claim referred to the fusel oil and to the other ingredient as mineral or earthy oils and stated no proportions. Defendants used naphtha 72 parts and fusel oil 28 parts. The claim was not voided because of its generality. The question was whether one compound of given proportions was the equivalent of another compound

varying in the proportions and the Court after saying that the term "equivalent" "means equally good," held it was a question for the jury.

Defendant cites Cochrane vs. Badische, 111 U. S., 293, 310, where the Court said:

> "Every patent for a product or composition of matter must identify it so that it can be recognized aside from the description of the process for making it, or else nothing can be held to infringe the patent which is not made by that process."

With this we agree for here the claims do identify the product apart from the process and so-called base tests, and the facts in the case at bar clearly distinguish it from the case cited.

Bene vs. Jeantet, 129 U. S., 683, is also distinguished in a similar manner. See our main brief, page 155.

The Incandescent Lamp Case, 159 U. S., 468, is also readily distinguished from the case at bar. In the Incandescent Lamp case, the Sawyer & Man patent in suit related to the filament of an incandescent lamp. The patentees stated they had made use of "carbonized paper and also wood carbon." The patent apparently did not specify any particular kind of paper or wood as being suitable and apparently many kinds were not suitable. The alleged infringing lamp was the Edison lamp in which a special kind of bamboo was used for the filament. The Sawyer & Man patent contained a claim 3, reading

> "The incandescing conductor for an electric lamp formed of carbonized paper substantially as described."

Wood carbon had been previously used as an incandescing conductor, but the Court held the claim valid, though concededly not infringed and although the claim was merely for a different material having the incandescing properties.

There was also a broader claim in suit, to wit, one which defined the filament broadly as "an incandescent conductor for an electric lamp of carbonized fibrous or textile material" and it was claimed that the Edison carbonized bamboo filament infringed this claim. The Court found that the Sawyer & Man lamp

> "was never a commercial success; that it does not embody the principle of high resistance with a small illuminating surface; that it does not have the filament burner of the modern incandescent lamp; that the lamp chamber is defective; and that the lamp manufactured by the complainant and put upon the market is substantially the Edison lamp."

And it was Edison, who, after finding over six thousand vegetable growths unsuitable, finally discovered one or two special varieties of bamboo which could be successfully used and it was by Edison's brilliant discovery and not that of Sawyer & Man that art was revolutionized. It was, as the Court said, **"under these circumstances"** unjust to hold that the one who had made the real invention should be held an infringer of a paper patent which had contributed nothing of value to the practical art (just the reverse in the case at bar). But the Court further held that if the claim be given a sufficiently broad construction as to include all carbonized fibrous filaments, including Edison's, then it would be anticipated, for it was shown that carbonized fibrous material such as wood had been used before Sawyer & Man, and such is far from the situation in the case at bar.

But the cited case, in fact, sustains our contention for the Court said (p. 476):

> "If Sawyer and Man had disovered that a certain carbonized paper would answer the purpose, their claim to all carbonized paper would, perhaps, not be extravagant."

In other words if Sawyer & Man discovered one carbonized paper suitable for the purpose, their claim of all

carbonized paper would be good even though some carbonized papers might not be suitable. In such case the claim would be construed as covering any carbonized paper suitable for the purpose. Such is the commonly accepted mode of interpretation in such cases.

Matheson vs. Campbell, 78 Fed., 910, and American vs. Mesta, 18 Fed. (2nd), 538, were distinguished at pages 155, 156, of our main brief.

The Product Claims Are Not Limited to the So-called 9 to 1 and 170 Degree Tests.

These limitations are process limitations and where, as here, the product is claimed independently of such process features, it is not limited thereto. This point is discussed at pages 134, 135, of our main brief, but we may add thereto the following cases,

In Maurer vs. Dickerson, 113 Fed., 870, 874; 51 C. C. A., 494, the Circuit Court of Appeals for the Third Circuit said:

> "Since, then, there was novelty both in the process and product, Hinsberg might have had one claim for the process and another claim for the product. Rubber Co. vs. Goodyear, 9 Wall., 788, 796, 19 L. Ed., 566; Merrill vs. Yeomans, 94 U. S., 568, 569, 24 L. Ed., 235. But he made the single claim quoted at the opening of this opinion. That claim, in terms, is for the described product, having certain distinguishing characteristics which are set forth in the claim with great fullness. In our judgment, it is very clear that the claim is not restricted to the product made by the described process, but covers the chemical individual, however, produced."

And in Dunn vs. Toronto, 259 Fed., 258, the Court said,

> "Certain it is, in view of the weight of authority and the latest decisions, that the inventor of a new and useful product or article of manufacture may have a patent which covers it and gives a monopoly upon it

regardless of great variations in the method of making (Powder Co. vs. Powder Works, 98 U. S., 126, 136, 137, 25 L. Ed., 77; Leeds Co. vs. Victor Co., 213 U. S., 301, 318, 29 Sup. Ct., 495, 53 L. Ed., 805; Durand vs. Schulze (C. C. A., 3), 61 Fed., 819, 821, 10 C. C. A., 97; Maurer vs. Dickerson (C. C. A., 3), 113 Fed., 870, 874, 51 C. C. A., 494; Lamb vs. Lamb (C. C. A., 6), 120 Fed., 267, 269, 56 C. C. A., 547; Sanitas Co. vs. Voigt (C. C. A., 6), 139 Fed., 551, 552, 553, 71 C. C. A., 535; Acme Co. vs. Commercial Co. (C. C. A., 6), 192 Fed., 321, 325, 326; 112 C. C. A., 573."

We quite agree with defendant's citation of Matheson vs. Campbell, 78 Fed., 910, for the Court there said:

> "An inventor takes certain starting materials, and subjects them to a process he has devised. The result is a product. If he sufficiently describes the starting materials and the process in his patent, he may claim the product, being new; (independently of the process and independently of the condition of the starting materials at the start), but if he simply defines what he claims as the 'product of his process' he might find it an extremely difficult matter to prove infringement. * * * Now, there are many tests that may be applied to two bodies which are being compared in order to determine whether they are or are not identical. The number of these tests may be multiplied indefinitely, for the skill, the experience, the scientific ingenuity of the chemist will ever devise new ones in the future, as they have old ones in the past. * * * and when, out of the multitudinous qualities which his product may exhibit under varying conditions and in different relations, he has selected and set forth in his patent a chosen few, surely these should be accepted as the distinguishing earmarks,—the characteristic stigmata of the product his patent is to cover." (Part in parenthesis ours.)

And so in the case at bar where Perkins has selected a chosen few characteristics as distinguishing his invention and set them forth in the product claims in suit, it follows that he should not be limited to others which he has not so

chosen and especially those which are merely characteristic stigmata of a preferred base, a different product. As stated in Motion Picture Patents Co. vs. Universal, 243 U. S., 502, 510 (also cited by defendant).

> "It is to the claims of every patent, therefore, that we must turn when we are seeking to determine what the invention is, the exclusive use of which is given to the inventor by the grant provided for by the statute."

The Disclaimer Question.

This is quite fully treated at pages 141-150 of our main brief, but at page 39 of its reply brief, defendant has injected the colloquy between the Court and counsel in the Hood-Wright case with respect to the effect of the disclaimer on process claim 13, i. e., one of the claims mentioned in the disclaimer and not one of the product claims here in suit as to which no disclaimer was filed. We quote the colloquy in full with our explanations in parenthesis. See footnote below.

"The Court: Just tell me what portion, according to your idea anyway, of claim 13 is covered by the disclaimer?

"A. Claim 13 illustrates the *process* of making wood glue which consists in treating a suitable starchy carbohydrate a material portion of which is substantially insoluble in water with a solvent of cellulose, etc. The scope of that claim—perhaps I should say the meaning of that claim, technically—

"Mr. Crosby: If I may interrupt your Honor, it seems to me that is a question of law as to how the disclaimer applies, rather than a question for the expert. I thought it was perfectly clear from our interpretation of the disclaimer, that it limits that claim so that no process is covered (by it) except where the dissolving step is applied to the base, already suitably degenerated as described by Perkins. That is our interpretation of it.

"The Court: That may be, but this witness is attempting to apply this claim to the *process* of the defendant, and in the application there must be eliminated such part as is covered by the disclaimer. What I am trying to get at from the witness is just exactly what the *claim* is after eliminating that part covered by the disclaimer in making his application.

(*Footnote continued on next page.*)

We submit it is unfair for defendant's counsel to thus take the remarks which had reference solely with respect to the

---

"Mr. Crosby: That is what we have felt was a question of law. We have no objection on our part to having the witness give his view-point of it, which is, as I understand, he said in the answer, that the disclaimer merely limits the *claim* to a *process* in which the base used is one degenerated to the point specified by Perkins as distinguished from a *process* in which that dissolving step might be applied to some other base. The disclaimer reads—

"The Court: I know how it reads.

"Mr. Crosby: That he excepts from *that claim*—that, he does not intend to cover *in that claim* any *process* excepting where the base used in the process is one degenerated to that point; whereas the claim, without the disclaimer, might be implied to include some other base.

"The Court: What for example?

"Mr. Crosby: One not degenerated to the proper point.

"The Court: To what point?

"Mr. Crosby: (Some) Entire raw starch, which would not produce Perkins' glue but some entirely different product.

"Mr. Kenyon: The Circuit Court of Appeals in Chicago said that our second step, per se, was not an invention, new with us; that is, simply treating starch, any kind of starch, with water and this caustic; that is (the process) was only ours when it stated with a suitably degenerated carbohydrate, then these steps of water and caustic produced our glue; but if those steps, those identical steps of water and caustic and those identical amounts had been applied to absolutely raw (highest viscosity) starch (in the way Perkins described without adjustment of conditions) we would not have produced our glue (under claim 13). The Circuit Court of Appeals said, therefore, you can't have the (process) claim as broad as that. We said to Judge Sanborn that word 'suitable' enables you to construe that claim down to the real limits of our (process) invention, namely, the application of that second step, water and caustic, in those quantities, to a carbohydrate suitably degenerated. Judge Sanborn said 'no.' I think the Circuit Court of Appeals meant that that was the claim for the second step, per se, irrespective of what you started with, therefore, it is broader than your (process) invention, because it covered, for instance, the application of these two steps to *absolutely* raw starch, which would not give us our glue (but an unworkable jelly). It also might cover the use of soluble starch or dextrine which would produce a watery size or mucilage. Therefore, we disclaimed from *that claim, if it covered it*—we disclaimed from *that claim* the treating by three parts or less of water and this caustic any kind of starch except a starch that has been degenerated to the point that we have described. Now the (process) claim, as limited by the disclaimer, is for the subject matter that is left, namely, for starting with the so degenerated starch,

(*Footnote continued on next page.*)

scope of certain process claims and use them in a manner calculated to lead the Court to believe that they had reference to the product invention. If the disclaimer as a matter of law applies to and limits the scope of the glue product claims, such misapplication of plaintiff's remarks cannot help defendant's cause, and if the disclaimer as a matter of law does not affect the glue product claims, no statement of any counsel can make it do so.

Defendant's Statements With Regard to the Solva Case are Misleading.

In the Solva Case there were several starch bases involved. One was made by a preliminary degeneration process like Perkins and probably fell within the 9 to 1 boil up test. Most of the Solva base was, however, raw starch (like defendant's here) and there was no evidence that it responded to either the 9 to 1 or 170° tests. Defendant, however, says (p. 32 of its Reply Brief) that this

---

and with that as the subject matter of the treatment applying the three parts or less of water and the caustic and getting the result that is specified. That is our (claim 13 process) invention. The claim, with the disclaimer, is clearly in terms limited to that. Without the disclaimer it might have been as broad as Judge Sanborn seems to have considered it, and, therefore, broader than our (process) invention. So the thing disclaimed (from claim 13) to put it crudely, would be the mixing of raw starch, that is the wholly undegenerated starch, for example, with three parts or less of water, and six to ten per cent. of caustic and trying to see what you would get. You would not (following Perkins' method of dissolving and without changing the conditions of mixing) get our glue under those circumstances; you would not have our (claim 13 process) invention under those circumtances. We do not want to cover that (in claim 13); the defendant may do that (so far as claim 13 is concerned). Therefore, we disclaimed that (from claim 13), but what is left (in claim 13), is the starting with a starch that is degenerated to the point that our patent describes as the (process) subject matter of the patent, the mixing of that starch and nothing else with three parts or less of water and with the caustic, and getting as a result of that combination the good as animal glue that Perkins first gave to the world, and that the defendant is enjoying the benefit of."

base behaved just like the processed goods when tested and the Solva Co. tested it the same way they did the processed goods and it tested the same. Defendant would apparently have the Court believe that it was tested by the so-called 9 to 1 boil up or 170° test. But such was not the fact. The evidence in the Solva Case showed that it was tested by dissolving it in between 2 and 3 parts of water with the caustic and seeing if the good as animal glue of the patent resulted, i. e., the test which defendant's expert and the Court in the Solva Case said was the fundamental and final determining test (see our main brief, p. 157). But on page 32 of their reply brief defendant's counsel say

> "In the words of plaintiff's own counsel, this particular raw starch was 'a starch * * * found in commerce already modified so that its viscosity is two or three times that of water by the Perkins test.' "

We submit plaintiff's counsel said no such thing. What plaintiff's counsel said was:

> "If a starch be found in commerce already modified so that its viscosity is two or three times that of water by the Perkins' test, then it may not be necessary to further modify it,"

and a reference to the record in the Solva Case shows that there is no justification for defendant's statement or inference. Neither plaintiff's statement nor the record supports defendant's contention that the Solva raw starch base (the glue made from which was held to infringe) responded to either the 9 to 1 boil-up test or the 170° test.

It is true that in the Solva case, for the purpose of showing that certain starches used at Poplar Bluff did not anticipate the glue **base** claim there in suit, plaintiff argued (see pp. 32-34, Defendant's Reply Brief) that these were many times more viscous than those which responded to the 9 to 1 boil up test and plaintiff there argued for a

limited construction of the glue **base claim** to avoid this and other prior art **bases**. But the Court in the Solva Case did not adopt plaintiff's contention. It gave a much broader range to the base, holding (251 Fed., 69) that as to the tests for the base

> "The most satisfactory of these is to apply the second step of the patent, and if the result is the veneering glue of the patents, the operator has guessed right,"

and the Court accordingly held the claim for the base invalid. We submit defendant is not justified in asserting that plaintiff is now bound by its then contention which was thus overruled by the Court and whose decision it accepted.

Respectfully submitted,

GORHAM CROSBY,
Counsel for Respondent.

S. MORTIMER WARD, JR.,
of Counsel for Respondent.

APPENDIX.

The great variety of forms of characteristics used in product claims is illustrated by the following cases:

Polygon Corp. vs. *Kant-Rust Corp.*, 292 Fed., 569. One of the claims read:

> "6. A penetrating adhesion freeing solution for releasing rust films between adherent surfaces comprising a volatile penetrating corrosion solvent and an oily vehicle for the solvent having a volatilization retarding relation to the solvent."

It appeared that defendant used elements different from those stated in the specification, but the Court said:

> "The objection that some of these elements are not mentioned in the specification carries no weight. Abbott was not bound to foresee and state every substance that could be used. To require that would be to require prophesy as to the price of patenting."

Badische vs. *Kalle*, 94 Fed., 163. Here one characteristic was a dye product "resembling indigo in color," etc., and the claim also stated the dye "is very fast to light and washing" i. e., characteristics of usefulness, and the Court said (p. 174):

> "To produce a cheap, artificial, soluble substitute for indigo, possessing many of its advantages and in some respects superior to indigo, was surely no mean achievement."

The defendant there advanced much the same plausible arguments as defendant herein advances, but the Court said (p. 171):

> "If one discovers a new and useful product he is entitled to the full benefit thereof no matter how it may be produced."

Holliday vs. *Pickhardt*, 29 Fed., 853, 860. The following claim was sustained:

> "I claim as my invention (1) the sulpho-conjugated compound of rosani-line, possessing the properties specified, as a new article of manufacture."

Pickhardt vs. *Packard*, 22 Fed., 530. The Court said:

> "It was not shown by the complainants that the defendants' coloring matter was made by the process described in the patent, nor was any evidence to the contrary produced by the defendants. The proofs show satisfactorily, however, that the defendants' coloring matter possesses the peculiar characteristics of the patented article."

Kraft Cheese Co. vs. *Pabst Co.*, 17 Fed. (2nd), 787. One of the claims read:

> "As a new article of manufacture, completely sterilized cheese of the Cheddar genus."

Theroz Co. vs. *Chemical Co.*, 14 Fed. (2nd), 629. One of the claims read:

> "1. An artificial fuel consisting of cellulose, having a nitrogen content, which renders it soluble in methyl alcohol, methyl alcohol and ethyl alcohol, substantially as described."

It will be noted that the claim does not state any proportions nor what particular compound should be used for nitrogen content and it appeared that defendant used very different proportions from those of plaintiff. The Court held the claim valid and infringed, saying (p. 635):

> "It is the duty of the court to avoid, if it reasonably can, a construction confining the patent to the precise method of manufacture which it describes."

Chadeloid vs. *DeRonde Co.*, 146 Fed., 988. The defendant used entirely different proportions than those specified in the patent and defendant did not use the methyl alcohol specified in the patent but used acetone instead, which, however, the Court found to be an equivalent because it was "equally good" and, therefore, held the claims valid and infringed.

Keasbey & Mattison Co. vs. *Carey Co.*, 139 Fed., 571. One of the claims read:

> "(3) The non-conducting composition herein described, consisting of a major proportion of carbonate of or calcined magnesia, which forms of itself the principal non-conducting element of the composition, and a minor proportion of asbestos fiber sufficient to bind the magnesia together, as herein set forth."

Dunn Co. vs. *Toronto Co.*, 259 Fed., 258. The product claim read:

> "As an article of manufacture, a wire-cut brick having wire-cut ribs on the side thereof, substantially as set forth."

Rumford Works vs. *New York Co.*, 134 Fed., 385. One of the claims read:

> "A baking preparation containing phosphoric acid or its compounds in granular condition essentially free from pulverulent phosphatic material, substantially as described."

Although the claims recite no proportions the Court held them valid and infringed saying (p. 388):

> "The defendants' powder is known as 'Lion Baking Powder.' Assuming, as defendants contend, that it contains from 10 to 12 per cent. of phosphatic material,

> which will pass through a No. 16 silk bolt, and may be denominated pulverulent, nevertheless we think the phosphatic element is generally granular in condition and essentially free from pulverulent matter. It is sufficiently so to produce all the results claimed by the patent."

Maurer vs. *Dickerson*, 113 Fed., 870. The product claim was:

> "The product herein described, which has the following characteristics: It crystallizes in white leaves, melting at 135° centigrade; not coloring on addition of acids or alkalies; is little soluble in cold water, more so in hot water; easy soluble in alcohol, ether, chloroform, or benzole; is without taste; and has the general composition $C_{10}H_{13}O_2N$."

And although the claim did not specify what acids or what strength of acids or alkalis should be used in making the color test, and it appeared that acids of certain strengths under certain conditions would not work, the Court held the claim valid and infringed because defendants article responded to all the tests specified in the *claim*, and the Court said (p. 874):

> "In our judgment, it is very clear that the claim is not restricted to the product made by the described process, but covers the chemical individual, however produced."

Farbenfabriken, etc., vs. *Kuehmsted*, 171 Fed., 887. Here there was a claim for a chemical product. The Court said:

> "As to infringement, the substance sold by defendant answers to all the tests prescribed by the patent claim."

And the Court found infringement based on the tests in claim and not on other tests.

There was no evidence that the defendant used the same process as that described in the patent.

Union Carbide Co. vs. *Carbolite Co.*, 188 Fed., 334. The claim reads:

> "As a new product, crystalline calcium carbide existing as masses of aggregate crystals, substantially as described."

General Bakelite Co. vs. *Insulate Co.*, 276 Fed., 166. One of the claims read:

> "As a new composition of matter, a fibrous or cellular material impregnated with an infusible and insoluble condensation product of phenol and formaldehyde."

General Bakelite Co. vs. *Nikolas*, 225 Fed., 539. Here one of the claims set forth no proportions but characterized the product by its **capability**. The claim read:

> "A varnish containing a volatile organic solvent and a condensation product of a phenolic body and formaldehyde, said condensation product characterized by its capability of transformation under the action of heat into an insoluble and infusible body, and by the presence therein of a base condensing agent."

General Electric vs. *Laco-Philips*, 233 Fed., 96. The Court said:

> "The inventors state their object and their claims in language characterized by clearness and simplicity. They say:
>
> " 'The present invention has for its object incandescing filaments for incandescent electric lights or lamps composed of substantially pure tungsten.' "

And they claim:

> "1. A filament for incandescent
> tungsten in a coherent metallic stat
> throughout."

Hemolin Co. vs. *Harway Co.*, 131 Fe
read:

> "(3) As a new article of manu
> matter derived from logwood extr
> ration therewith of an alkaline nit
> ized by the fact of its being a fria
> cold and rapidly soluble in hot wat
> described."

Products Co. vs. *Milk Co.*, 293 Fed
claims held valid was:

> "A liquid composition compris
> emulsion of chocolate and milk."

although it stated no proportions.

ent lights consisting of
state and homogeneous

Fed., 483. The claim

anufacture, a coloring
xtract by the incorpo-
nitrite, and character-
riable solid, soluble in
water, substantially as

Fed., 941. One of the

rising a homogenized
,

SUPREME COURT OF THE UNITED STATES.

No. 285.—October Term, 1927.

Holland Furniture Company, Petitioner, *vs.* Perkins Glue Company.	On Writ of Certiorari to the United States Circuit Court of Appeals for the Sixth Circuit.

[May 14, 1928.]

Mr. Justice Stone delivered the opinion of the Court.

Respondent brought this suit in the district court for western Michigan, to enjoin infringement of the Perkins Reissued Patent No. 13436. So much of the judgment for the defendant, petitioner here, as held the product claims of the patent not infringed by respondent's product, was reversed by the court of appeals for the sixth circuit. *Perkins Glue Co.* v. *Holland Furniture Co.*, 18 Fed. (2d) 387. The court of appeals for the seventh circuit, *Perkins Glue Co.* v. *Gould Manufacturing Co.*, 292 Fed. 596, and the court of appeals for the second circuit, *Perkins Glue Co.* v. *Standard Furniture Co.*, 287 Fed. 109, had previously held the patent not infringed by the same product.[1] This Court granted certiorari. 275 U. S. —.

The patent is entitled "A Patent for Starch Glue and a Method of Making It." Perkins was the first to make successfully a starch glue suitable for wood veneering and similar uses. Glue made from animal substances, known as animal glue, has long been in common use as an adhesive and is especially adapted to use in wood veneering, in which thin sheets or layers of wood are fastened together by the use of an adhesive bonding material. The characteristic qualities of animal glue, making it peculiarly suitable for

[1]Other cases involving the patent in suit are Perkins Glue Co. v. Solva Waterproof Glue Co., 233 Fed. 792; Solva Waterproof Glue Co. v. Perkins Glue Co., 251 Fed. 64; Perkins Glue Co. v. Hood, 279 Fed. 454; Perkins Glue Co v. Holland Furniture Co., 279 Fed. 457; Perkins Glue Co. v. Standard Furniture Co., 279 Fed. 458; Perkins Glue Co. v. Gould Mfg. Co., 280 Fed. 728; Perkins Glue Co. v. Crandall Panel Co., 294 Fed. 135.

that use, are a low absorptiveness of water and a consequent high degree of fluidity, facilitating its application by mechanical means, high elasticity and great tensile strength. A high water content, characteristic of other adhesive preparations, delays drying, warps the wood and when dry leaves too little bonding material to secure the requisite strength. In practice animal glue is made suitably fluid for use in wood veneering by the addition of a critically small amount of water, three parts by weight to one of glue.

Long before Perkins' experiments, adhesive paste or mucilage made from starch was well known. The Gerard Patent (1874, Belgian, No. 34869 and the Dornemann Patent (1893, French, No. 232781) described a process of producing an adhesive or glue by dissolving starch in a solution of caustic alkali. The suitability of starch as a glue base in this and other processes depends upon its water absorptive quality which varies with the starch of different plants, and under varying conditions with the starch of the same plant. Because of their high water absorption, glues produced from starch, before Perkins, were too viscous and hence required too large an admixture of water for use successfully as a wood veneering glue. The controlling difficulty to be overcome in the development of a starch glue suitable for veneering was what may be called the normally large water absorptive quality of starch, corresponding to the viscosity of the resultant glue, a reduction of the one effecting a reduction in the other.

It has long been known that the viscosity or the water absorptive quality of starches may be reduced by chemical treatment known as degeneration in which changes in the arrangement of the atoms in the starch molecules are effected by use of a catalytic agent. In 1906 Gerson & Sachse (German, No. 167275) patented a process for the preparation of a starch base for glue manufacture by degenerating starch by the use of oxidizing agents in the presence of an alkali. But the resultant glue from this and other processes was not suitable for use in the wood-working trades. To make it sufficiently fluid for convenient use required too large an admixture of water, four parts or more to one of glue, so that the wood was warped and when dried the glue was not sufficiently tenacious to be used successfully as a substitute in that manufacture for animal glue.

The Perkins patent described a process for making glue from starch and a resultant product "as good as animal glue," "which

will have the great practical advantage that it may be practically used for the same purposes as the best animal glue." The process consisted of two steps. The basic material was a suitable raw starch, preferably starch made from the cassava root, and the first step was concerned with its conversion or degeneration so as to make a "glue base" with lower water absorptivity than ordinary untreated starch. This was to be accomplished by combining the basic raw material with oxidizing agents and subjecting them to heat. The method was that described in the Gerson & Sachse patent and was not new. The characteristic feature of this first step as described by Perkins was not the manner of degeneration but its degree. The degeneration of the raw cassava starch was to be carried to a point just short of its conversion into dextrine, a soluble starch, which, because of that property is of little value in glue manufacture. The patent in its re-issued form stated with precision the particular degree to which the water absorptive properties of the starch might be reduced in the preparation of a suitable glue base and described with particularity tests (the "9 to 1 boil up" test and the 170° test) for ascertaining when that stage of degeneration had been reached.

The second step in the process consisted in the treatment of the glue base, as prepared by the first step, by the addition of three parts or less of water by weight to one of the glue base and a specified percentage of cellulose solvent such as caustic potash. This process was described by the Gerard and Dornemann patents and was not new. The fundamental ideas of the process patent might be expressed in simple terms as follows: Glue made by dissolving ordinary starch in an alkaline solution of three parts of water (the quantity with which the wood-working industry is accustomed) is too thick. Glue made from over-degenerated starch is too weak. Between the extremes there is a range of degeneration within which the starch base, when dissolved in caustic potash, will produce glue of ample fluidity without loss of tensile strength or other qualities characteristic of animal glue.

The product claims, of which more will be said presently, was for the resultant glue, in substance for a starch glue having substantially the properties of animal glue.

The patent has thirty-eight claims, divisible into groups. One group covers the process of producing the degenerated starch glue base, the first step process, already described. One group em-

braces the glue base product produced by the first step process. Another group includes the process of dissolving the starch base, by the use of alkaline solvents, the second process step; another, the combination of the two process steps and finally the group with which we are now concerned is based upon the ultimate product, the glue itself. Three of the claims embraced in this ultimate product group are the only ones now in suit, 28, 30 and 31. They are as follows:

> 28. A glue comprising cassava carbohydrate rendered semi-fluid by digestion and having substantially the properties of animal glue.
>
> 30. A wood and fiber glue formed of a starchy carbohydrate or its equivalent by union therewith of about 3 parts or less by weight of water and alkali metal hydroxid.
>
> 31. A wood and fiber glue containing amylaceous material as a base dissolved without acid in about three parts of water or less, and being viscous, semifluid and unjellified.

Of these the broadest in terms is No. 28, but it appears that a glue thus composed will not have "substantially the properties of animal glue" unless containing only the small amount of water specified in Claim 30. We may take it also that an article which is "wood and fiber glue" as described in the specifications will be "viscous, semifluid and unjellified" as described in Claim 31, and will also have substantially the properties of animal glue as specified in Claim 28, so that in point of substance the product claims in suit are for a starch glue which, combined with about three parts or less by weight of water will have substantially the same properties as animal glue.

With respect to the other or non-product groups of claims respondent, in consequence of earlier litigation, has filed a disclaimer. Brief reference must be made to both the litigation and the disclaimer. The respondent brought an infringement suit in the northern district of Illinois against the Solva Company, asserting an infringement of claims in each of the five groups by the product of that company, comprising in part at least a raw cassava starch glue base which, for present purposes, may be taken as identical with the product of the petitioner. Upon appeal to the seventh circuit court of appeals. *Solva Waterproof Glue Co.* v. *Perkins Glue Co.*, 251 Fed. 64, that court rendered an opinion, in some respects obscure, which has given rise to widely differing views as to its effect. In considering the present question we may assume that the court below was right in saying of that opinion,

"It held that the claims to the first step of the process, and to the product resultant therefrom—the glue base—were anticipated by Gerson & Sachse, and hence that the glue base, as a product and as the foundation of the second step in Perkins' process, was an old and unpatentable product. It found that Perkins' glue had the novelty and merit claimed for it. It sustained the claims to the compound two-step process, and to some extent at least, the claims to the ultimate product, and did not sustain the claims to the second-step process. No attention was paid to any distinctions in the different kinds of solva base that were involved. Its treatment of the process claims to the second-step process is open to the interpretation—and we think it the right one—that the Court considered those claims broad enough to cover the specified treatment as applied to any starch base however high in viscosity, and employing water to any extent, and even though the product would not approximate Perkins glue; and hence thought them invalid. If that view is correct they were too broad. At the conclusion of its opinion the court said that the decree 'below sustaining the claims for the glue base and [first step] product, and for the so-called second step as such, is reversed, and that part of it which upholds the claims of the patent for the final process and the resultant product is affirmed.' "

We may assume also the correctness of the view of the court below that the effect of this decision was to sustain broadly the claim to the resultant product, the glue described in claims 28, 30 and 31, as distinguished from the intermediate product which was the resultant of the first step and was found to be old, and that the product claims thus upheld included a starch glue having substantially the properties of animal glue whether made by the employment of both steps of the compound process or not.

As a result of this decree the plaintiff filed a disclaimer of all the claims for the glue base itself and all those for the first process step. It also disclaimed from the second process step "any process of making glue, excepting where the starch or starchy product or carbohydrate subjected to the process, is degenerated to the extent described [in the patent], whereby the process results in the good as animal glue described" in the patent. Again we assume that the court below was right in saying that the effect of the disclaimer as to the second step claims was to limit them to a process where the material with which the second process step begins is any starch in fact degenerated to the point necessary to produce the result at which the second process step is aimed,

whether the degeneration is effected by the first step or other artificial process or the suitable starch is a natural agricultural product, sufficiently degenerated without chemical treatment and purchaseable in commercial quantities.

The second step process as narrowed by the disclaimer consists in the selection of a starch suitably degenerated, no matter how, and the treatment of it with an alkali as in the Gerard and Dornemann patents, but by the terms of the disclaimer only such starches are suitable, that is to say, fall within the range of selection, which, when treated by the second step process, will produce a glue as good as animal glue for veneering. The use or function of the resultant glue is made the measure or test of the choice of its ingredients.

Apparently no brand of raw starch which Perkins could procure in commercial quantities when conducting his experiments could be used as a glue base without the artificial degeneration of his first step. But it appears that the defendant has been able to purchase in such quantities a starch which is a natural agricultural product having a low water absorptiveness and other characteristics making it suitable for use as a glue base. Beginning with this starch the petitioner employs what is in effect so much of Perkins' second step as is old by combining the starch with three parts of water or less and approximately 4% of caustic soda. The mixture, when agitated and heated, produces a glue which petitioner says is heavier than animal glue, but which is used commercially as a substitute for it and which, for present purposes, may be taken as having substantially the qualities of animal glue. Whether the result may be attributed wholly to reduced viscosity of the starch, due to changed methods of cultivation or manufacture, or in some measure to peculiarities of petitioner's dissolving operation does not appear.

Petitioner contends that the raw starch selected and used by it in the manufacture of its product has high water absorptive qualities above the range defined by the patent, not satisfying the tests laid down in the patent for ascertaining whether the appropriate stage for degeneration has been reached for the employment of the second step. As the process claims are not before us this contention has bearing only upon the broad product claims which are the subject of the present suit. It is the contention of the respondent, and the court below held, that its product claims 28,

30 and 31, concededly broad enough, as stated, to cover the petitioner's product, are valid and that all starch veneering glues, at least when mixed with three parts of water or less, having substantially the properties of animal glue, infringe the patent whether made by Perkins' process or otherwise.

We take it, as the respondent argues, that product patents or patents of compositions of matter are distinct from patents of the process by which the product may be produced. The former, if sufficiently described, may exist and be sustained independently of the latter. *Rubber Company* v. *Goodyear*, 9 Wall. 788; *Leeds & Catlin* v. *Victor Talking Machine Co.*, 213 U. S. 301, 318. Hence any narrowing of process claims is not necessarily a narrowing of product claims. So much of the claim as is saved from the second step of Perkins' process after the disclaimer and referred to here as a process claim is, in fact, only the choice of an ingredient of the glue product, independently of the chemical process of producing it. It was necessary that the Perkins' patent, so far as it is a patent of a composition of matter, should contain some description of the ingredients entering into the composition which would both define the patent, *Grant* v. *Raymond*, 6 Pet. 218, 247; *Wood* v. *Underhill*, 5 How. 1, 5; *Tyler* v. *Boston*, 7 Wall. 327, 330; *Béné* v. *Jeantet*, 129 U. S. 683; *Howard* v. *Detroit Stove Works*, 150 U. S. 164, 167, and carry it beyond the previous development of the art. Had Perkins claimed only a glue made of starch dissolved in three parts of water with an alkali, he would not have advanced beyond the Gerard and Dornemann patents and subsequent practice. As his patent discloses, it was well known that ordinary starch treated in this manner produced a thick glue unsuitable for wood veneering if made with three parts of water, and a thin glue not strong enough for wood veneering if made with four parts or more of water.

Perkins' real invention, apart from the combination of his first and second step processes, with which we are not now concerned, was that by the use of a particular kind of starch as an ingredient a new composition of matter was made for which he claimed his patent. Some description of this product was obviously essential to patentability and Perkins in the reissued patent sought to meet this necessity in two ways. One was to describe the product by describing its characteristic ingredient with particularity. If we look at the specifications, as we may, he did this by indicating the range of

water absorptivity, or stated in another way the degeneration, of the starch ingredient in Perkins' glue. As described the starch ingredient fell short of dextrine or soluble starch, but was of lower water absorptivity than petitioner's glue base. The glue made of this ingredient within the specified range was a new product. This was invention of a new composition of matter and was the real contribution Perkins made to the art. As such it was entitled to the protection of a patent but as thus described and limited petitioner's product does not infringe.

To so describe the product is not, as the court below seemed to think, a limitation of product claims by reference to process claims. A patentable process is a method of treatment of certain materials to produce a particular result or product. *Cochrane* v. *Deener*, 94 U. S. 780. The description of one does not necessarily embrace the other. Either or both may be patentable. But here we are concerned only with the choice of one ingredient of the product. There can be no description of a composition of matter without some designation of its ingredients. If the selection or choice or designation of an essential ingredient of a composition of matter may be referred to, inaccurately as we think, as a process, the "process" is one inseparable from the composition itself. The description of one necessarily limits the other. Hence the patent of the product cannot extend beyond a product having the designated ingredient. See *Powder Co.* v. *Powder Works*, 98 U. S. 126, 137; *Béné* v. *Jeantet*, *supra*; *Goodyear Dental Vulcanite Co.* v. *Davis*, 102 U. S. 222.

Perkins' second way of describing the starch ingredient of his product was in terms of the use or function of the product itself. The chosen starch ingredient was to possess such qualities that when combined with three parts of water and with alkali it would produce a product "as good as animal glue" for veneering, or having the properties of animal glue, these properties being described in terms of its functions. The ingredient was thus described, not in terms of its own physical characteristics or chemical properties or those of the product, but wholly in terms of the manner of use of the product. Any glue made of a starch base, whatever its composition, water absorptiveness or other properties, combined with alkali and three parts of water, which has substantially the properties of animal glue, or is as good as animal glue for use in the wood-working trades, is claimed as Perkins'

glue. Thus the inventor who advances the art by discovery that a certain defined material may be combined in a product useful for certain purposes seeks to extend his monopoly to any product which may subsequently be made from materials not within any defined range described in the patent, but which is likewise useful for those purposes.

But an inventor may not describe a particular starch glue which will perform the function of animal glue and then claim all starch glues which have those functions, or even all starch glues made with three parts of water and alkali, since starch glues may be made with three parts of water and alkali that do not have those properties. See *The Incandescent Lamp Patent*, 159 U. S. 465, 472. Revised Stat., § 4888, requires that the patent shall contain a description of the invention "and of the manner and process of making, constructing, compounding, and using it, in such full, clear, concise, and exact terms as to enable any person skilled in the art or science to which it appertains, or with which it is most nearly connected, to make, construct, compound, and use the same." One attempting to use or avoid the use of Perkins' discovery as so claimed and described functionally could do so only after elaborate experimentation. Respondents say that laboratory tests would be insufficient and that "the best and probably the only satisfactory test is to try it out on a large scale in a furniture or veneering gluing factory." A claim so broad, if allowed, would operate to enable the inventor who has discovered that a defined type of starch answers the required purpose to exclude others from all other types of starch and so foreclose efforts to discover other and better types. The patent monopoly would thus be extended beyond the discovery and would discourage rather than promote invention. *The Incandescent Lamp Patent, supra*, 476. That the patentee may not by claiming a patent on the result or function of a machine extend his patent to devices or mechanisms not described in the patent is well understood. *O'Reilly* v. *Morse*, 15 How. 62, 112, 113; *Knapp* v. *Morss*, 150 U. S. 221, 228; *Electric Signal Co.* v. *Hall Signal Co.*, 114 U. S. 87; *Westinghouse* v. *Boyden Power Brake Co.*, 170 U. S. 537; *Mitchell* v. *Tilghman*, 19 Wall. 287; *Fuller* v. *Yentzer*, 94 U. S. 288; *Ridson Iron & Locomotive Works* v. *Medart*, 158 U. S. 68. Respondent argues that this principle, applicable to machine patents, is inapplicable to a patent for the composition of matter which is always a result of a process and

concededly is patentable as such, but the attempt to broaden product claims by describing the product exclusively in terms of its use or function is subject to the same vice as is the attempt to describe a patentable device or machine in terms of its function. As a description of the invention it is insufficient and if allowed would extend the monopoly beyond the invention. See *Béné* v. *Jeantet, supra; Cochrane* v. *Badische Anilin & Soda Fabrik,* 111 U. S. 293; *The Incandescent Lamp Patent, supra; Matheson* v. *Campbell,* 78 Fed. 910; *American Adamite Co.* v. *Mesta Machine Co.,* 18 Fed. (2d) 538.

So far as respondent seeks to enlarge its product patent by subordinating the patent description of the starch ingredient which the patentee used, and which respondent does not use, to the vague and indefinite description in the three product claims now in suit, the patent is subject to the same vice.

Reversed.

A true copy.

Test:

Clerk, Supreme Court, U. S.